A TEREX BRAND

Parts Manual

Serial Number Range

GTH-1056

from SN GTH10E-16000

Part No. 1303146GT
Rev: A.02
September 2024

Technical Publications

Genie has endeavored to deliver the highest degree of accuracy possible. However, continuous improvement of our products is a Genie policy. Therefore, product specifications are subject to change without notice.

Readers are encouraged to notify Genie of errors and send in suggestions for improvement. All communications will be carefully considered for future printings of this and all other manuals.

Contact Us:

Internet: www.genielift.com
e-mail: awp.techpub@terex.com

Find a Manual for this Model

Go to http://www.genielift.com

Use the links to locate Operator's, Parts, Maintenance, and Service and Repair Manuals.

Copyright © 2020 by Terex South Dakota, Inc.

1303146GT Rev A.02 September 2024
Second Edition, First Printing

Genie and "GTH" are registered trademark of Terex South Dakota, Inc. in the USA and many other countries.

Printed on recycled paper

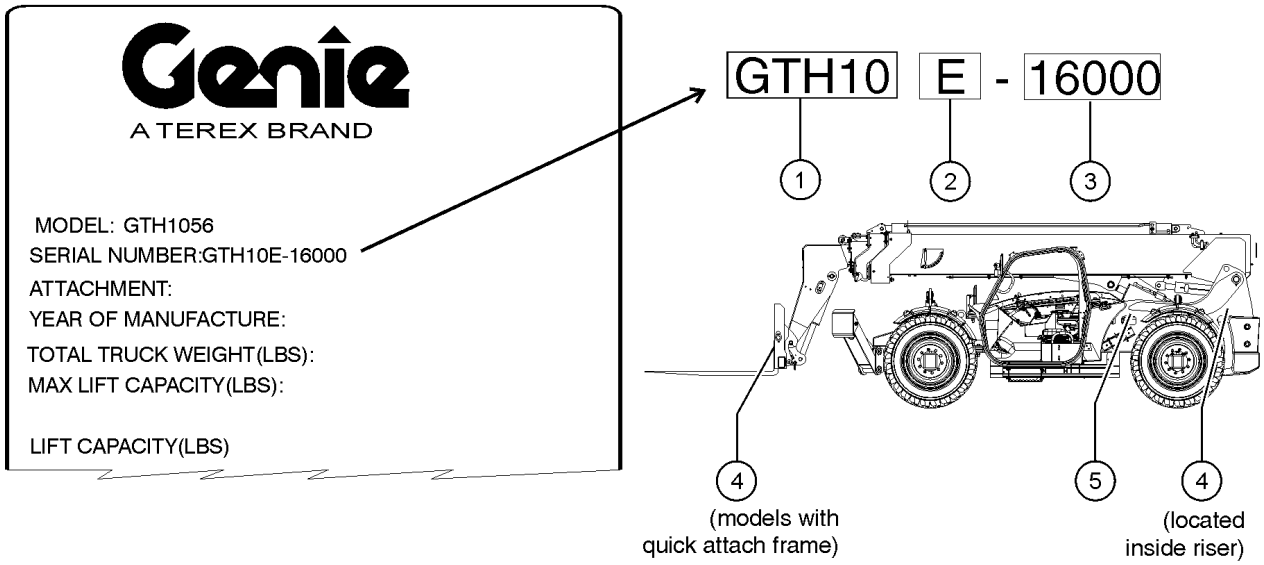

1 Model
2 Facility code
3 Sequence number
4 Serial label (located inside plate of rear chassis) (Models with quick attach frames: Attachment Serial label placed on frame.)
5 Serial number (stamped on chassis)

How to Order Parts

Please be prepared with the following information when ordering replacement parts for your Terex or Genie product.

- ☒ **Machine model number**
- ☒ **Machine serial number**
- ☒ **Part number**
- ☒ **Part description and quantity**
- ☒ **Purchase order number**
- ☒ **"Ship to" address**
- ☒ **Desired method of shipment**
- ☒ **Name and telephone number of the authorized distributor in your area**

Use the Service Parts Fax Order Form on the next page and fax your order to our Parts Department.

If you don't know the name of your authorized distributor, or if your area is not currently serviced by an authorized distributor, please call Terex or Genie Industries.

Machine Information

_____

Model

_____

Serial Number

_____

Date of Purchase

_____

Authorized Genie Distributor

_____

Phone Number

North America

Telephone (425)881-1800

Toll Free (800)536-1800 in US and Canada

Fax (425)556-8659

Toll Free fax (888)274-6192

Email AWP.PartsSalesPO@terex.com

http://genielift.com/en

EMEAR (Europe, Middle East, Africa and Russia)

Telephone (31)(165)519 313

Fax (31)(165)511 148

http://genielift.co.uk

Asia Pacific (Genie Singapore)

Telephone +65 6692 7777

Fax +65 6261 8893

http://genielift.com.sg/

Australia

Telephone (61)(7)3456 4444

Fax (61)(7)3456 4466

http://genielift.com.au

South America

Telephone (55)(11)4082 5600

Fax (55)(11)4082 5630

Please refer to section 001 for the Recommended Spare Parts List.

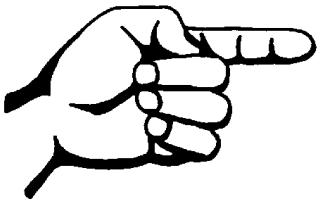

This page intentionally left blank.

TEREX CORPORATION

Service Parts Fax Order Form

Fax to: (425) 556-8659 or Toll Free: 888-274-6192
International: +1-425-556-8659

Please fill out completely

Date _____ Account Number _____

Your Name _____ Your Fax Number _____

_____ Your Phone Number _____

Bill To _____ Ship To _____

_____ _____

_____ _____

_____ _____

Purchase Order Number _____ Ship Via _____

Model(s) _____ **Serial No.(s)** _____

Optional Equipment _____

Part Number	Description	Quantity	Price

All back-ordered parts will be shipped when available via the same ship method as the original order unless Noted below:

- ☐ Ship complete order only - No back orders
- ☐ Ship all available parts and contact customer on disposition of back-ordered parts
- ☐ Other (please specify)

Description — Page

001 Parts Stocking List 12

001.1 Parts Stocking List 12

0100 Decals 16

101.1 Decals with Words, Engine Side (to SN GTH10E-16264) 16
101.2 Decals with Words, Engine Side (From SN GTH10E-16265) 18
102.1 Decals with Words, Cab Side (to SN GTH10E16264) 20
102.2 Decals with Words, Cab Side (From SN GTH10E-16265) 22
103.1 Decals with Words, Cab 24
104.1 Decals with Symbols, Engine Side (to SN GTH10E-16264) 26
104.2 Decals with Symbols, Engine Side (From SN GTH10E-16265) 28
105.1 Decals with Symbols, Cab Side (to SN GTH10E-16264) 30
105.2 Decals with Symbols, Cab Side (From SN GTH10E-16265) 32
106.1 Decals with Symbols, Cab 34

0200 Drive Chassis Components 36

201.1 Stabilizer Assembly (to SN GTH10E-16264) 36
201.2 Stabilizer Assembly (from SN GTH10E-16265) 38
202.1 Front Axle View (to SN GTH10E-16264) 40
202.2 Front Axle View (from SN GTH10E-16265) 42
202.2 Front Chassis Assembly 44
203.1 Engine Tray 50
204.1 Engine Cover 54
205.1 Fuel and Hydraulic Tank Assembly (to SN GTH10E-16264) 58
205.2 Fuel and Hydraulic Tank Assembly (from SN GTH10E-16265) 64
206.1 Drive Shaft Linkage (to SN GTH10E-16264) 70
206.2 Drive Shaft Linkage (from SN GTH10E-16265) 74
207.1 Cover Assembly, View-1 (to SN GTH10E-16264) 76
207.2 Cover Assembly, View-1 (from SN GTH10E-16265) 78
208.1 Cover Assembly, View-2 (to SN GTH10E-16264) 80
208.2 Cover Assembly, View-2 (from SN GTH10E-16265) 82
209.1 Battery Cables (to SN GTH10E-16264) 84
209.2 Battery Cables (from SN GTH10E-16265) 86

0201 Dana Axle Components 88

210.1 Front Axle, Central Housing 88
211.1 Front Axle, Differential 90
212.1 Front Axle, Hub Reduction 94
213.1 Front Axle, Brakes 100
214.1 Front Axle, Steering 102
215.1 Front Axle, Trunnion 104

Description — Page

216.1 Rear Axle, Central Housing 106
217.1 Rear Axle, Differential 108
218.1 Rear Axle, Hub Reduction 112
219.1 Rear Axle, Brakes 116
220.1 Rear Axle, Steering 118
221.1 Rear Axle, Trunion 120

0300 Transmission Components 122

301.1 ZF Drive Shaft Assembly 122
302.1 ZF First Gear Assembly 124
303.1 ZF Second Gear Assembly 126
304.1 ZF Third Gear Assembly 128
305.1 ZF Fourth Gear Assembly 130
306.1 ZF Converter Housing Assembly 132
307.1 ZF Transmission Clutch Assembly 134
308.1 ZF Reverse Clutch Assembly 138
309.1 ZF Pump Assembly 142
310.1 ZF Valve Assembly 144
311.1 ZF Housing Assembly 146
312.1 ZF Control Unit 148
313.1 ZF Engine Connection 150
314.1 ZF Output Shaft Assembly 152
315.1 CVT Transmission Manifold Assy 154
316.1 CVT Transmission-1 156
317.1 CVT Transmission-2 158
318.1 CVT Transmission-3 160
319.1 CVT Transmission-4 162
320.1 CVT Transmission-5 164
321.1 Dana Converter housing 166
322.1 Dana Transmission Case 168
323.1 Dana Torque converter 172
324.1 Dana Gear Assembly 174
325.1 Dana Pump Drive Assembly 176
326.1 Dana Charge Pump Assembly 178
327.1 Dana Reverse idler 180
328.1 Dana Forward and Reverse Shaft 182
329.1 Dana Third Gear Shaft 184
330.1 Dana First and Second Gear Shaft 186
331.1 Dana Output shaft 190
332.1 Dana Control and Modulation Valves 192
333.1 Dana Flex plate 194
334.1 Dana Transfer Case (drop box) 196

Description **Page**

0400 Cab Components 200

401.1 Standard Cab Components, View 1 200
402.1 Standard Cab Components, View 2 206
403.1 Standard Cab Components, View 3 210
404.1 Standard Cab Components, View 4 212
405.1 Electronic Joystick Components 216
406.1 Enclosed Cab Assembly Option, View 1 218
407.1 Enclosed Cab Assembly Option, View 2 222
408.1 Enclosed Cab Assembly Option, View 3 224
409.1 Enclosed Cab Assembly Option, View 4 226
410.1 Enclosed Cab Assembly Option, View 5 228
411.1 Enclosed Cab Assembly Option, View 6 230
412.1 Enclosed Cab Assembly Option, View 7 232
413.1 Enclosed Cab Assembly Option, View 8 234
414.1 Enclosed Cab Assembly Option, View 9 236
415.1 Washer Bottle Assembly 238
416.1 Rear Backup Camera, Components 240

0500 Engine Components 242

501.1 Deutz TCD3.6, T3 Engine, View 1 242
502.1 Deutz TCD3.6, T3 Engine, View 2 248
503.1 Deutz TCD3.6, T3 Engine, View 3 252
504.1 Deutz TCD3.6, T3 Engine, View 4 258
505.1 Deutz TCD3.6, T4F Engine, View 1 262
506.1 Deutz TCD3.6, T4F Engine, View 2 268
507.1 Deutz TCD3.6, T4F Engine, View 3 272
508.1 Deutz TCD3.6, T4F Engine, View 4 278
509.1 Deutz TCD3.6, T4F Engine, View 5 282
510.1 Deutz TCD3.6, 74HP T4F Engine, View 1 286
511.1 Deutz TCD3.6, 74HP T4F Engine, View 2 290
512.1 Deutz TCD3.6, 74HP T4F Engine, View 3 294
513.1 Deutz TCD3.6, 74HP T4F Engine, View 4 300
514.1 Deutz TCD3.6, 74HP T4F DANA Engine, View 1 304
515.1 Deutz TCD3.6, 74HP T4F, DANA Engine, View 2 308
516.1 Deutz TCD3.6, 74HP T4F, DANA Engine, View 3 312
517.1 Deutz TCD3.6, 74HP T4F, DANA Engine, View 4 318

0600 Fork and Frame Components 322

601.1 Fork Frame, Quick Attachment 322
602.1 Fork Frame, Rotate Attachment 324
603.1 Fork Frame, Swing Carriage Attachment 328

Description — Page

604.1 Fork Frame, Side Shift Attachment 332
605.1 Fork Frame, Fork Positioner 334
606.1 Truss Boom 338
607.1 Bucket 340

0700 Boom Components 342

701.1 Boom Assembly Number 4 342
702.1 Boom Assembly Number 3 346
703.1 Boom Assembly Number 2 350
704.1 Boom Assembly Number 1, View 1 354
705.1 Boom Assembly Number 1, View 2 358
706.1 Cable Track Assembly 362
707.1 Boom Light 364

0800 Hydraulic Components 366

801.1 Hydraulic Hose and Fittings, View 1 366
802.1 Hydraulic Hose and Fittings, View 2 370
803.1 Hydraulic Hose and Fittings, View 3 374
804.1 Secondary Function Manifold 378
805.1 Brake Manifold 382
806.1 PVG Manifold 384

0900 Options 386

901.1 Work light, Roadlight and Proximity Alarm 386
902.1 Air Conditionong Assembly - Belt Driven 390
903.1 HVAC Hose and Fittings 392
904.1 Heater/AC Blower Installation, View-1 394
905.1 Heater/AC Blower Installation, View-2 396
906.1 Heater/AC Blower Installation, View-3 398
907.1 PASS Option 400
908.1 Telematics Option 402
909.1 Access Manager Option (from SN GTH10E-16283) 404
910.1 Backup Camera Option 406
911.1 Cold Weather Package 408

1000 Wire Harnesses 410

1001.1 Wire Harnesss, View 1 410
1001.101 Harness, Front Lights Power 412
1001.102 Harness, Work Lights 414
1001.102B Harness, Road Lights 416
1001.103 Harness, Cab Light Power 418
1001.104 Harness, Secondary Manifold 420

Description	Page
1001.105 Cable, Battery Black 2/0	422
1001.106 Cable, Battery Red 2/0	424
1001.107 Harness, Transmission, ZF	426
1001.107B Harness, Transmission, CVT	428
1001.107C Harness, Transmission, Dana	430
1001.108 Harness, Cab, ZF	432
1001.108B Harness, Cab,CVT	436
1001.108C Harness, Cab, DANA	440
1001.109 Harness, ECM, EAT, DEUTZ,TCD3.6T4F	444
1001.109B Harness, ECM, DEUTZ, TCD3.6	448
1001.110 Harness, PCB Ground	450
1001.112 Harness, Power, Dome Light	452
1001.113 Harness, Power, Beacon Light	454
1001.114 Harness, Boom Light Power	456
1001.115 Harness, Primary PVG Manifold	458
1002.1 Wire Harnesss, View 2	460
1002.101 Harness, HVAC Split, Cab	462
1002.102 Harness, Universal, Pass	464
1002.104 Assembly, Ground Buss	466
1002.107 Harness, Enclosed Cab, GTH	468
1002.109 Harness, HV, Cab	470
1002.109B Harness, HVAC, Cab	472
1002.110 Harness, Diagnostics, CVT	474
1002.111 Harness, Diagnostics, GTH	476
Part Number Index	**478**

001.1 Parts Stocking List

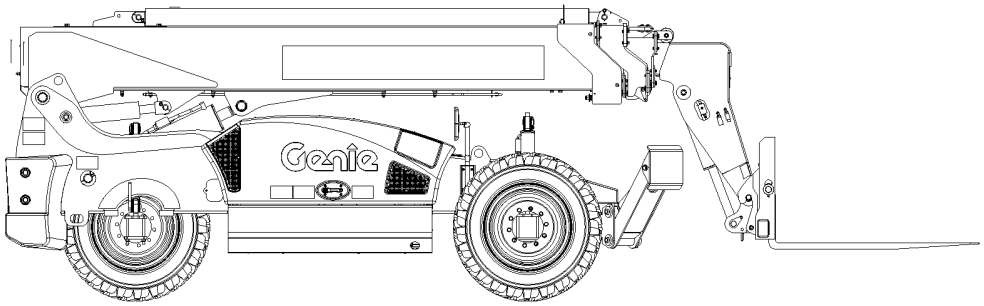

A- General service parts
B- Manuals
C- Filters
D- Deutz TCD3.6 model specific parts

Item	Part No.	Description	Qty.
A		----GENERAL SERVICE PARTS---	
A-	1484GT	PAINT, AEROSOL, BRIGHT BLUE*** 12-ounce spray paint	
A-	1268GT	PAINT, AEROSOL, GENIE GRAY*** 12-ounce spray paint	
A-	1258567GT	PAINT, AEROSOL, TRAFFIC BLACK 12-ounce spray paint	
A-	32150GT	PAINT, WET, GENIE BLUE (1 GL)** 1-gallon	
A-	32151GT	PAINT, WET, GENIE GRAY (1GL)** 1-gallon	
A-	1257733GT	PAINT, WET, TRAFFIC BLACK(1 GL)** 1-gallon	
A-	66399GT	GREASE, DIELECTRIC 4 OZ**	
A-	1283776GT	SEAL MARKER,CROSS CHECK,BLUE,TUBE	
A-	93500GT	PARKER DIGITAL PRESSURE GAUGE	
A-	49612GT	O-RING KIT (ORFS FITTINGS) O-ring kit, ORFS	
A-	49613GT	PLUG AND CAP KIT-SERVICE,ORFS* Plug and cap kit, ORFS	
A-	28750GT	O-RING KIT,FIELD SVC,ALL PROD* O-ring kit, SAE	
A-	33994GT	PLUG AND CAP KIT-SERVICE,37?** Plug and cap kit, SAE	
A-	1288309GT	6K/8K CYLINDER CHOCK ASSMEBLY	
B		-----MANUALS-----	
B-	27581GT	MANUAL, SAFTY MANNAL	
B-	1281112GT	GENIE GTH-1056 OPERATOR'S MANUAL	
B-	1287211GT	GENIE GTH-1056 SERVICE AND REPAIR MANUAL	
B-	1298933GT	MANUAL, SAIA MANUAL OF RESPONSIBILITIES, MEWP	
B-	97488GT	MANUAL,DANA 212 AXLE MAINT.	
B-	218707GT	OPERATOR'S MANUAL, DEUTZ TCD3.6 MODELS	
B-		SERVICE MANUAL, ZF TRANSMISSION	
B-	117765GT	MANUAL,PERKINS 1104,OPERATOR	
B-	117764GT	MANUAL,PERKINS 1104,WORKSHOP	
B-	218726GT	OPERATION AND MAINTENANCE MANUAL, PERKINS 1204E MODELS	
C		-----FILTERS-----	
C-	1252184GT	OIL FILTER	

001.1 Parts Stocking List

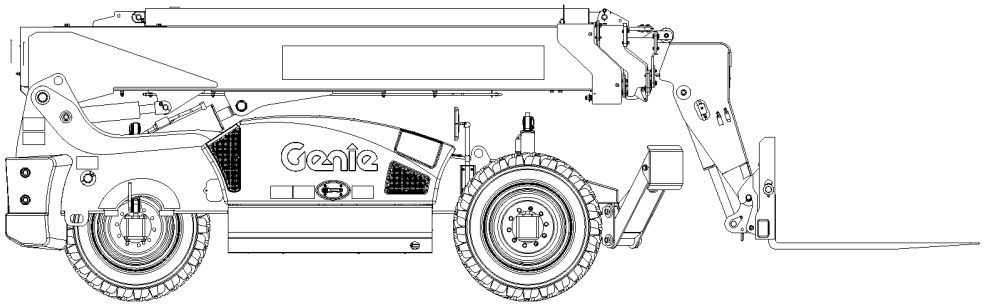

A- General service parts
B- Manuals
C- Filters
D- Deutz TCD3.6 model specific parts

Item	*Part No.*	*Description*	*Qty.*
C-	117379GT	ELEMENT,HYDRAULIC FILTER	
C-	1256219GT	FILTER,MAIN,M+H IQORON V7 (Deutz and Perkins 1104D Engines)	
C-	1256220GT	FILTER,SECONDARY,M+H IQORON V7	
C-	7-109-14GT	SAFETY ELEMENT (Deutz and Perkins 1104D Engines)	
C-	220063GT	FILTER, MAIN, M&H500 (Perkins 854E Engine)	
C-	220064GT	FILTER, SECONDARY, M&H500 (Perkins 854E Engine)	
D		-----DEUTZ TCD3.6 MODELS-----	
D-	823057GT	FILTER,FUEL,SPIN-ON TCD3.6	
D-	236260GT	PRE-FILTER,FUEL,DEUTZ TCD3.6	
D-	49924GT	FILTER,OIL,DEUTZ F4L1011F	
D-	236268GT	V-BELT,RADIATOR FAN,DEUTZ TCD3	
D-	236267GT	V-BELT,ALTERNATOR,DEUTZ TCD3.6	

101.1 Decals with Words, Engine Side (to SN GTH10E-16264)

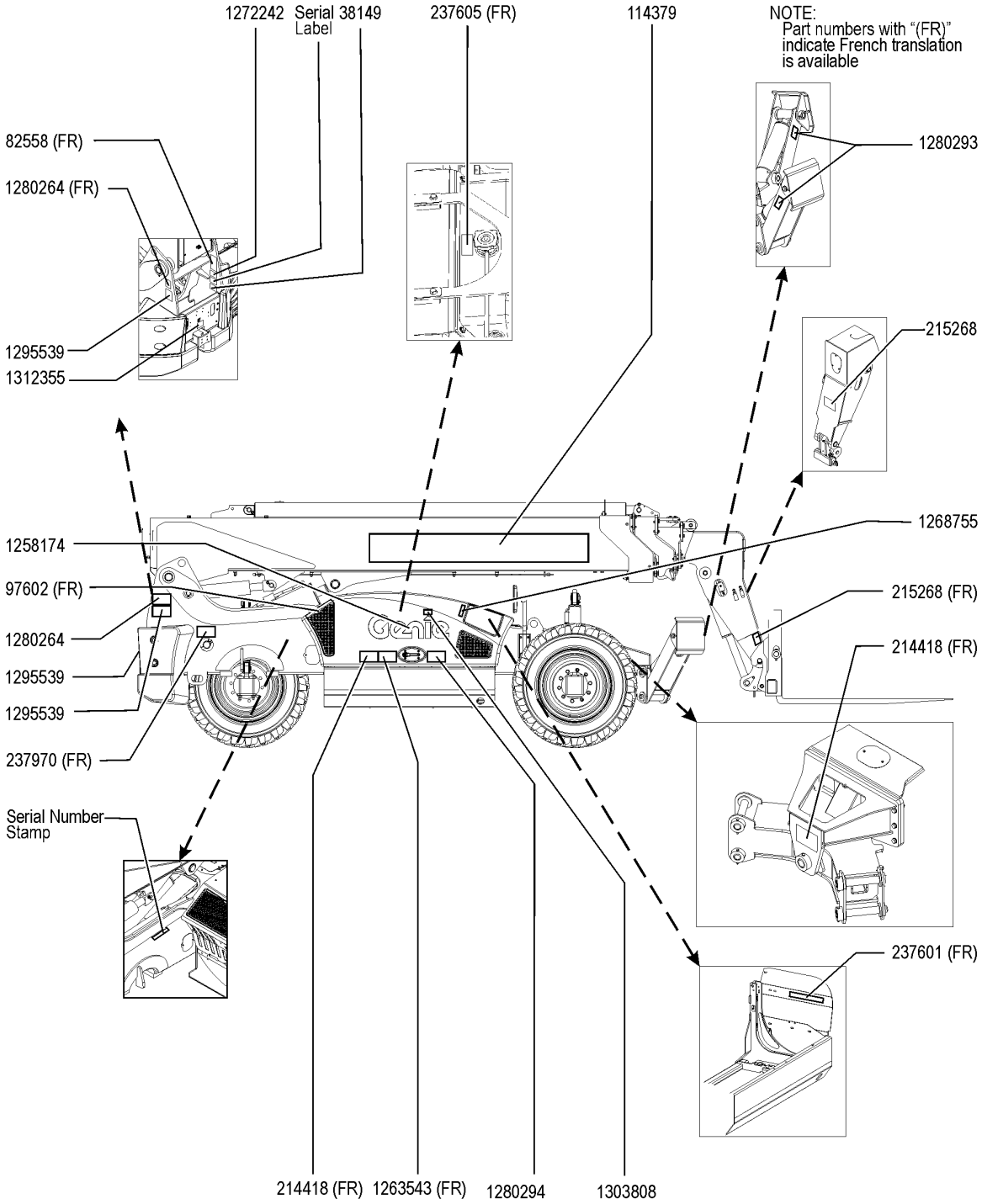

101.1 Decals with Words, Engine Side (to SN GTH10E-16264)

Item	Part No.	Description	Qty.
-	1308625GT	INSTRUCTIONS,INSTALL,COMP,WORD, GTH-1056	1
-	1308626GT	DECAL KIT, GTH-1056,COMP,WORD,ANSI & AUS	1
1	38149GT	DECAL,LABEL,PATENTS	1
2	82558GT	DECAL,SKIN INJECTION	1
3	97602GT	DECAL,EXPLOSION HAZARD	1
4	114379GT	DECAL,COSMETIC,GENIE GTH-1056 from SN GTH10E-16001	1
5	214418GT	DECAL,DANGER/WARNING	2
6	215268GT	DECAL,FALL HAZARD,WORK PLAT	2
7	237601GT	DECAL,BURN HAZARD	1
8	237605GT	DECAL,HOT PARTS	1
9	237970GT	DECAL,CRUSH HAZARD,TIRES	1
10	1258174GT	DECAL COSMETIC,10" GENIE WHITE from SN GTH10E-16001	1
11	1263543GT	DECAL,COMPARTMENT ACCESS	1
12	1268755GT	SERIAL PLATE, TCD3.6,T4F,8K	1
13	1272242GT	DECAL,MACHINE REGISTRATION/OWN	1
14	1280264GT	DECAL, CRUSH HAZARD, TELEHANDLER	2
15	1280293GT	DECAL, OUTRIGGER, 2 PANEL	2
16	1280294GT	DECAL, BURN HAZARD, 2 PANEL	1
17	1295539GT	DECAL,COSMETIC,GENIE GTH-1056,SMALL from SN GTH10E-16001	2
18	1303808GT	DECAL,TEST,PORT	1
19	1312355GT	DECAL,COSMETIC,GENIE GTH-1056,SMALL	1

101.2 Decals with Words, Engine Side (From SN GTH10E-16265)

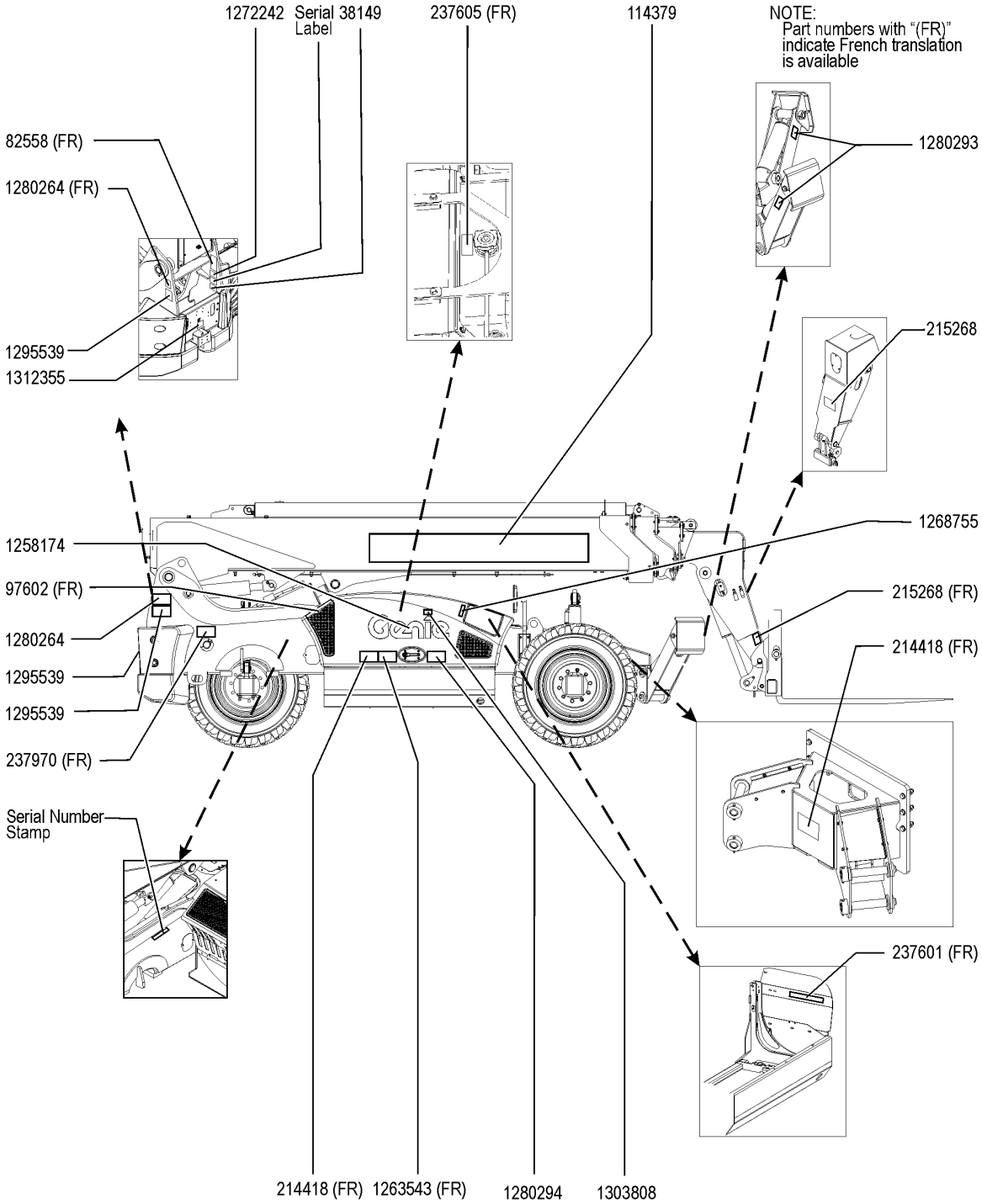

101.2 Decals with Words, Engine Side (From SN GTH10E-16265)

Item	Part No.	Description	Qty.
-	1308625GT	INSTRUCTIONS,INSTALL,COMP,WORD, GTH-1056	1
-	1308626GT	DECAL KIT, GTH-1056,COMP,WORD,ANSI & AUS	1
1	38149GT	DECAL,LABEL,PATENTS	1
2	82558GT	DECAL,SKIN INJECTION	1
3	97602GT	DECAL,EXPLOSION HAZARD	1
4	114379GT	DECAL,COSMETIC,GENIE GTH-1056	1
5	214418GT	DECAL,DANGER/WARNING	2
6	215268GT	DECAL,FALL HAZARD,WORK PLAT	2
7	237601GT	DECAL,BURN HAZARD	1
8	237605GT	DECAL,HOT PARTS	1
9	237970GT	DECAL,CRUSH HAZARD,TIRES	1
10	1258174GT	DECAL COSMETIC,10" GENIE WHITE	1
11	1263543GT	DECAL,COMPARTMENT ACCESS	1
12	1268755GT	SERIAL PLATE, TCD3.6,T4F,8K	1
13	1272242GT	DECAL,MACHINE REGISTRATION/OWN	1
14	1280264GT	DECAL, CRUSH HAZARD, TELEHANDLER	2
15	1280293GT	DECAL, OUTRIGGER, 2 PANEL	2
16	1280294GT	DECAL, BURN HAZARD, 2 PANEL	1
17	1295539GT	DECAL,COSMETIC,GENIE GTH-1056,SMALL	2
18	1303808GT	DECAL,TEST,PORT	1
19	1312355GT	DECAL,COSMETIC,GENIE GTH-1056,SMALL	1

102.1 Decals with Words, Cab Side (to SN GTH10E16264)

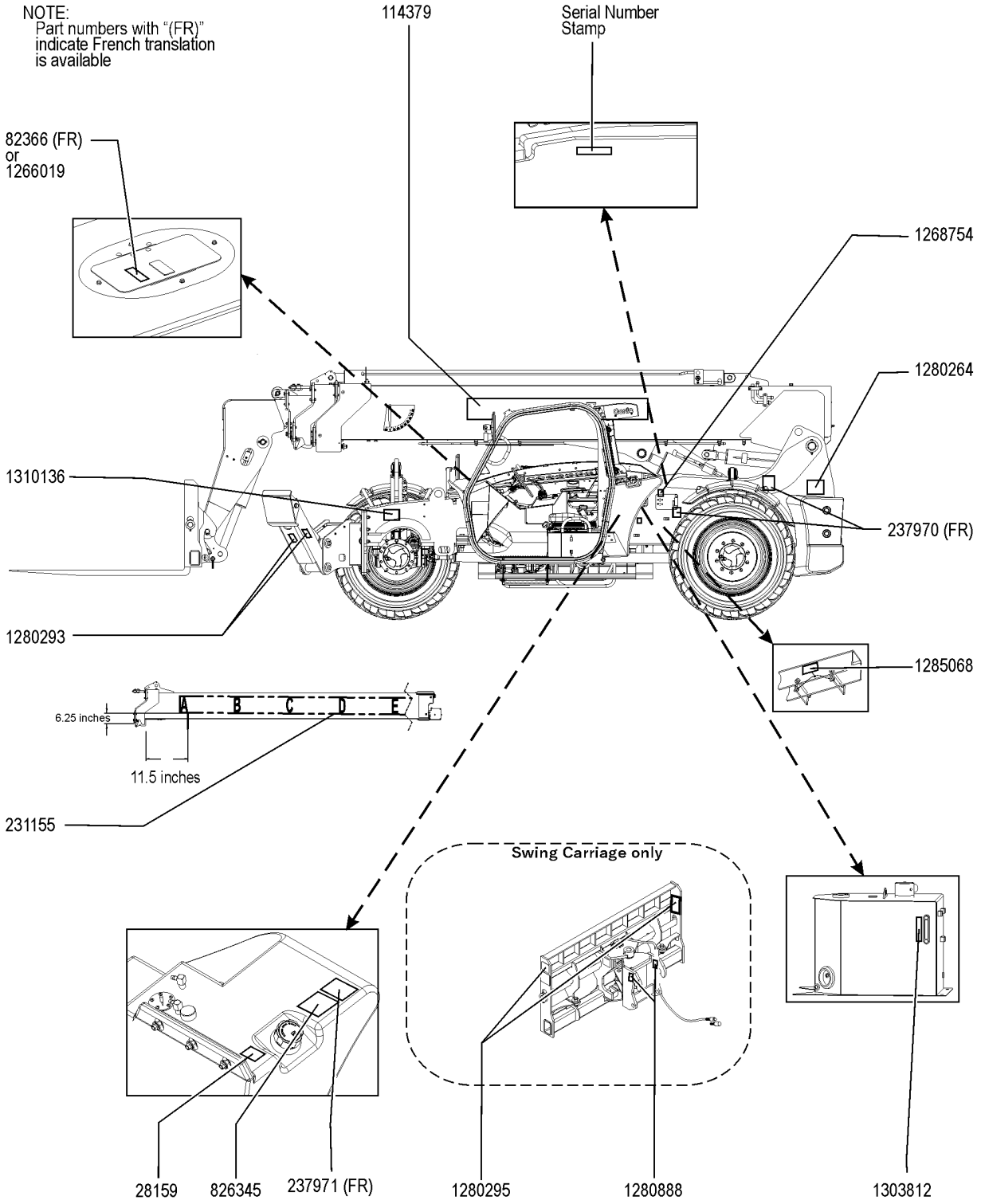

102.1 Decals with Words, Cab Side (to SN GTH10E16264)

Item	Part No.	Description	Qty.
1	28159GT	DECAL,DIESEL	1
2	82366GT	DECAL,CHEVRON RANDO HD	1
3	114379GT	DECAL,COSMETIC,GENIE GTH-1056	1
4	160482GT	DECAL, TRANSPORT/LIFT DIAGRAM	1
5	231155GT	DECAL, A-G, GTH1056, WHITE	1
6	237970GT	DECAL,CRUSH HAZARD,TIRES	2
7	237971GT	DECAL,EXPLOSION,FUELING	1
8	826345GT	DECAL,ULS DIESEL ONLY,TIER 4	1
9	1266019GT	DECAL, LABEL, SHELL TELLUS	1
10	1268754GT	DECAL,DEF FILL	1
11	1280264GT	DECAL, CRUSH HAZARD, TELEHANDLER	1
12	1280293GT	DECAL, OUTRIGGER, 2 PANEL	2
13	1280295GT	DECAL, TRUSS BOOM WARNING, 2 PANEL	2
14	1280888GT	DECAL, WARN, CRUSH HAZ, 2 PANEL	2
15	1285068GT	DECAL – WARNING, CYLINDER CHOCK,WRDS	1
16	1303812GT	DECAL,HYDRAULIC,LEVEL	1
17	1310136GT	LABEL,TRANSPORTATION AND LIFT,10K	1

102.2 Decals with Words, Cab Side (From SN GTH10E-16265)

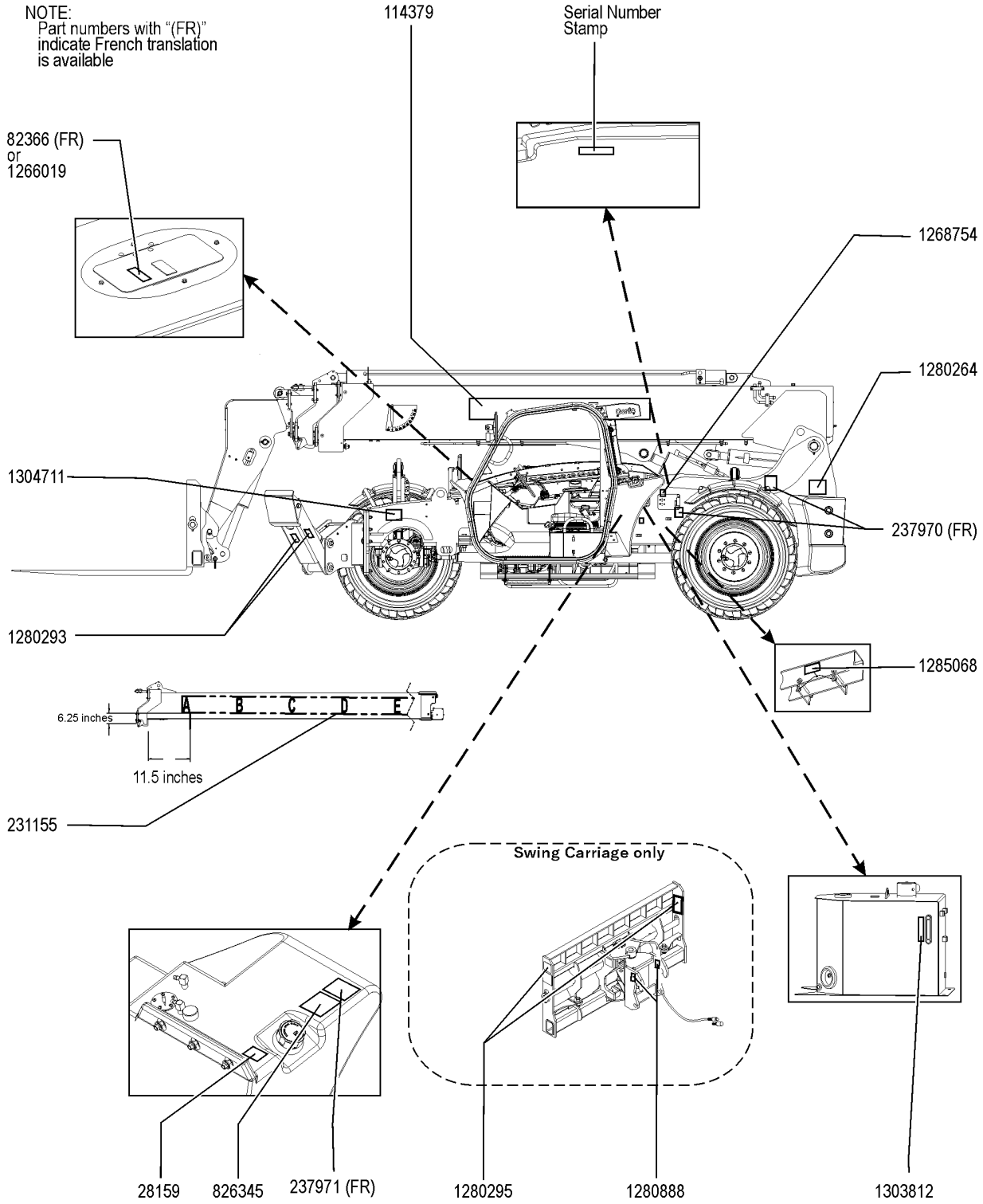

102.2 Decals with Words, Cab Side (From SN GTH10E-16265)

Item	*Part No.*	*Description*	*Qty.*
1	28159GT	DECAL,DIESEL	1
2	82366GT	DECAL,CHEVRON RANDO HD	1
3	114379GT	DECAL,COSMETIC,GENIE GTH-1056	1
4	160482GT	DECAL, TRANSPORT/LIFT DIAGRAM	1
5	231155GT	DECAL, A-G, GTH1056, WHITE	1
6	237970GT	DECAL,CRUSH HAZARD,TIRES	2
7	237971GT	DECAL,EXPLOSION,FUELING	1
8	826345GT	DECAL,ULS DIESEL ONLY,TIER 4	1
9	1266019GT	DECAL, LABEL, SHELL TELLUS	1
10	1268754GT	DECAL,DEF FILL	1
11	1280264GT	DECAL, CRUSH HAZARD, TELEHANDLER	1
12	1280293GT	DECAL, OUTRIGGER, 2 PANEL	2
13	1280295GT	DECAL, TRUSS BOOM WARNING, 2 PANEL	2
14	1280888GT	DECAL, WARN, CRUSH HAZ, 2 PANEL	2
15	1285068GT	DECAL – WARNING, CYLINDER CHOCK,WRDS	1
16	1303812GT	DECAL,HYDRAULIC,LEVEL	1
17	1304711GT	LABEL,TRANSPORTATION AND LIFT,10K/12K	1

103.1 Decals with Words, Cab

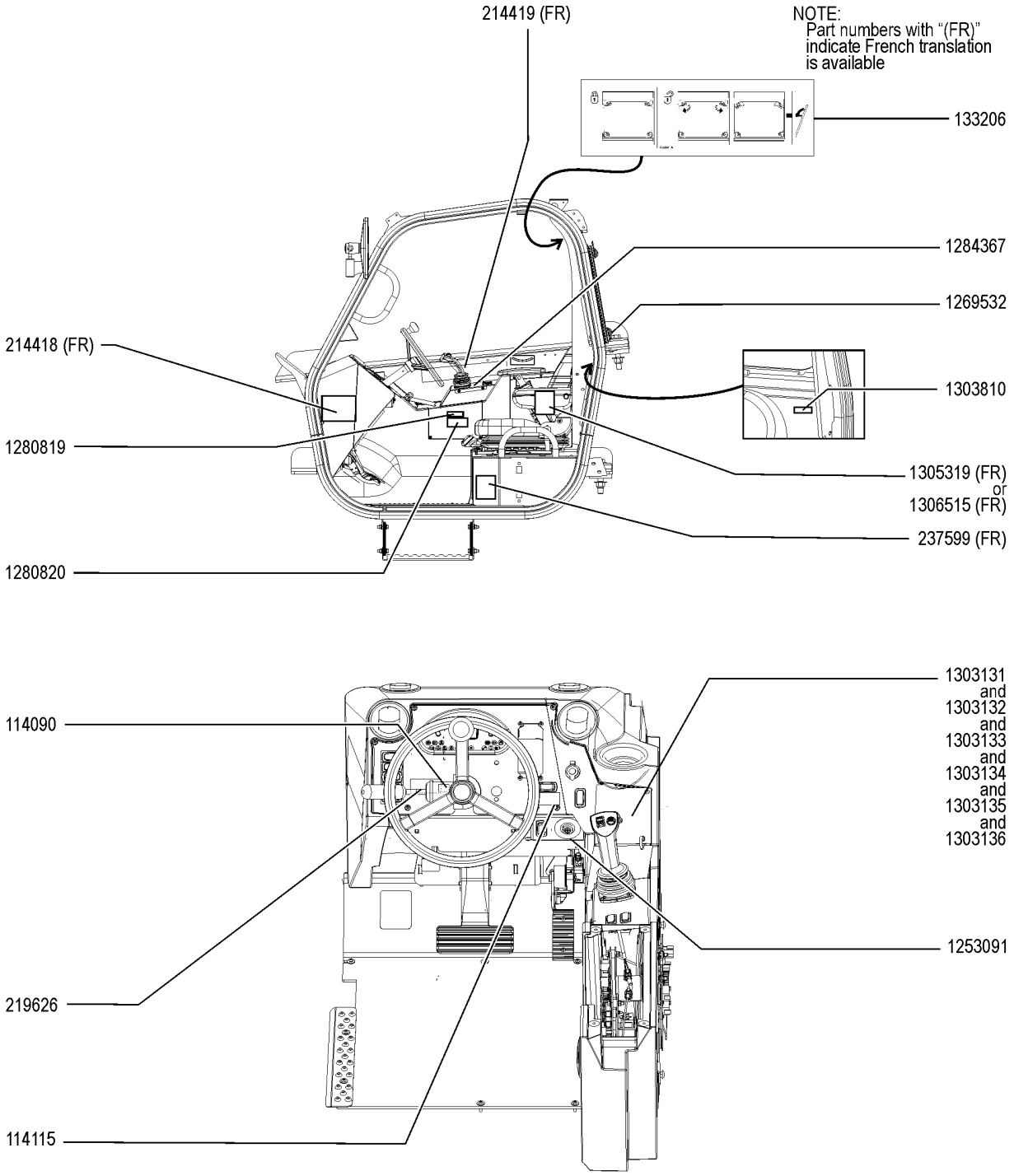

103.1 Decals with Words, Cab

Item	Part No.	Description	Qty.
1	114090GT	DECAL,TRANSMISSION CONTROL	1
2	114115GT	DECAL,STEERING SELECTOR	1
3	133206GT	DECAL,OPEN WINDOW INST	1
4	214418GT	DECAL,DANGER/WARNING	1
5	214419GT	DECAL, 6 DECAL COMBO	1
6	219626GT	DECAL,COSMETIC,GENIE DOMED,BLK	1
7	237599GT	DECAL,WARNING,WEAR SEAT BELT	1
8	1253091GT	DECAL,KEY IGNITION, 8/10K	1
9	1269532GT	DECAL, SAFE T PUNCH	1
10	1280819GT	DECAL,WARNING,CANCER AND REPRODUCTIVE HARM, PROP 65 US ANSI only	1
11	1280820GT	DECAL,FUEL,DIESEL EXHAUST, PROP 65 US ANSI only	1
12	1284367GT	DECAL,UNIVERSAL CONTROLLER,2X5	1
13	1303131GT	CARD,LOAD CHART,GTH1056E,1-2	1
14	1303132GT	CARD,LOAD CHART,GTH1056E,2-3	1
15	1303133GT	CARD,LOAD CHART,GTH1056E,3-4	1
16	1303134GT	CARD,LOAD CHART,GTH1056E,4-5	1
17	1303135GT	CARD,LOAD CHART,GTH1056E,5-6	1
18	1303136GT	CARD,LOAD CHART,GTH1056E,6-7	1
19	1303810GT	DECAL, LABEL, FOPS/ROPS	1
20	1305319GT	DECAL,FUSE/RELAY BOARD,E. JOYSTICK,GTH	1
21	1306515GT	DECAL,FUSE/RELAY BOARD,CVT,GTH	1

104.1 Decals with Symbols, Engine Side (to SN GTH10E-16264)

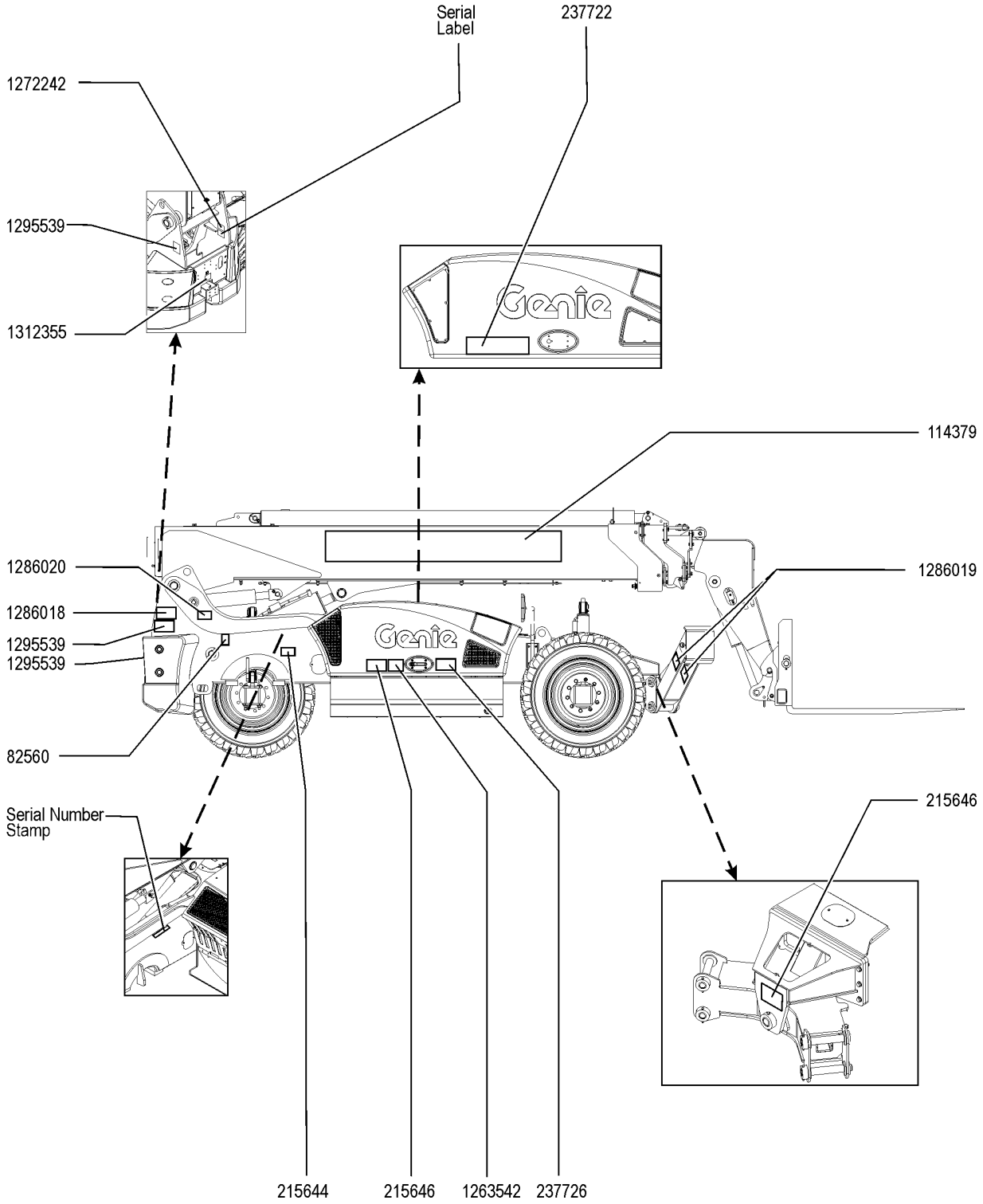

104.1 Decals with Symbols, Engine Side (to SN GTH10E-16264)

Item	*Part No.*	*Description*	*Qty.*
-	1308627GT	INSTRUCTIONS,INSTALL,COMP,SYMBOL, GTH-1056	1
-	1308628GT	DECAL KIT, GTH-1056,COMP,SYMBOL,ANSI & CE	1
1	82560GT	DECAL,SYMBOL-SKIN INJECT HAZRD	1
2	114379GT	DECAL,COSMETIC,GENIE GTH-1056 from SN GTH10E-16001	1
3	215644GT	DECAL,WARNING,CRUSH HAZZARD,TI	1
4	215646GT	DECAL, 2 DECAL COMBO	2
5	237722GT	DECAL,DANGER,BATTERY SAFETY	1
6	237726GT	DECAL,WARN,EXPLOSION/BURN HAZA	1
7	1263542GT	DECAL, COMPARTMENT ACCESS	1
8	1272242GT	DECAL,MACHINE REGISTRATION/OWN	1
9	1286018GT	DECAL, BODY CRUSH, ROLLING TELE, SYM	1
10	1286019GT	DECAL, FOOT CRUSH, OUTRIG, SYM	2
11	1286020GT	DECAL, BURN HAZARD, SYM	1
12	1295539GT	DECAL,COSMETIC,GENIE GTH-1056,SMALL from SN GTH10E-16001	2
13	1312355GT	DECAL,COSMETIC,GENIE GTH-1056,SMALL	1

104.2 Decals with Symbols, Engine Side (From SN GTH10E-16265)

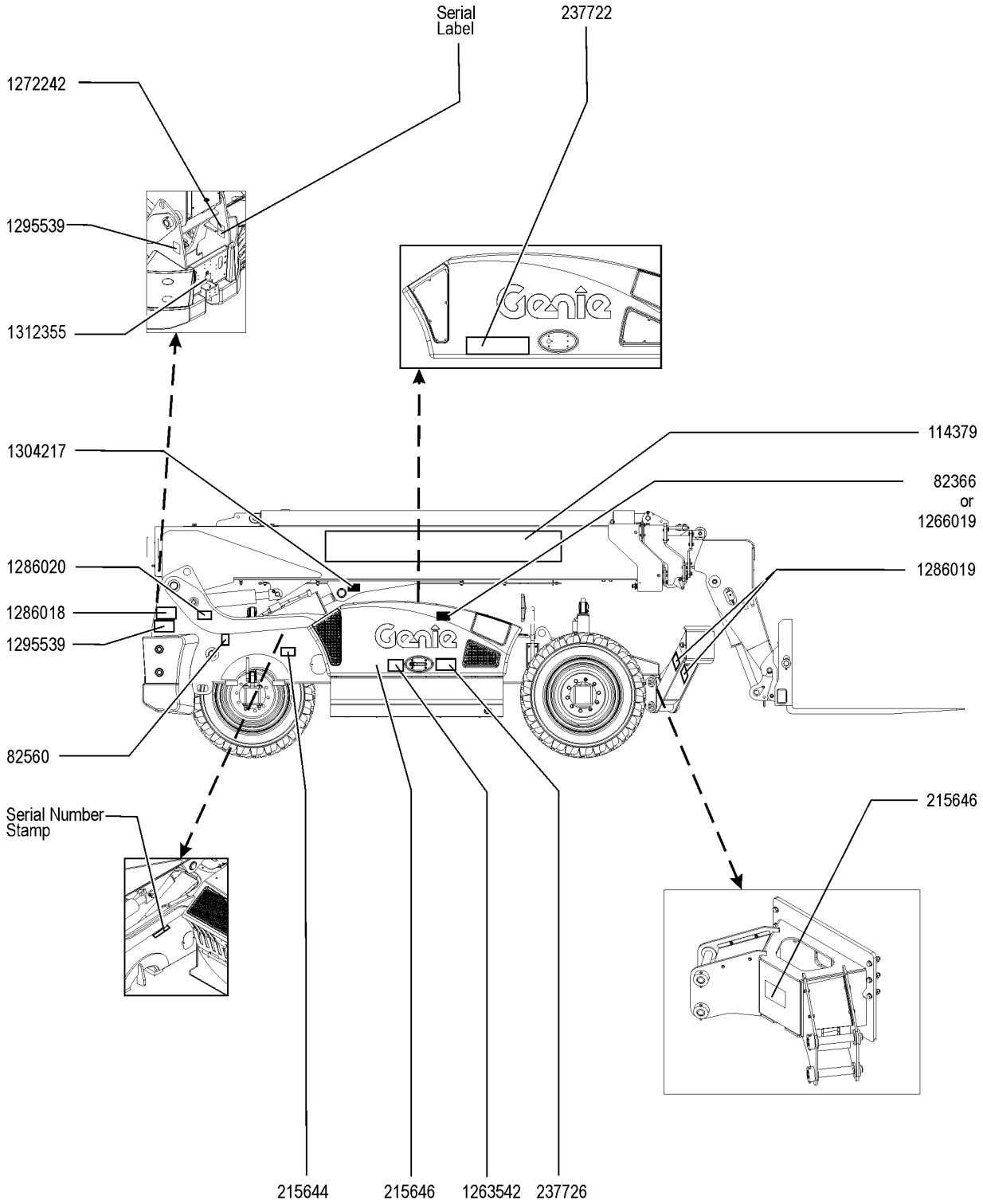

104.2 Decals with Symbols, Engine Side (From SN GTH10E-16265)

Item	*Part No.*	*Description*	*Qty.*
-	1308627GT	INSTRUCTIONS,INSTALL,COMP,SYMBOL, GTH-1056	1
-	1308628GT	DECAL KIT, GTH-1056,COMP,SYMBOL,ANSI & CE	1
1	82560GT	DECAL,SYMBOL-SKIN INJECT HAZRD	1
2	114379GT	DECAL,COSMETIC,GENIE GTH-1056	1
3	215644GT	DECAL,WARNING,CRUSH HAZZARD,TI	1
4	215646GT	DECAL, 2 DECAL COMBO	2
5	237722GT	DECAL,DANGER,BATTERY SAFETY	1
6	237726GT	DECAL,WARN,EXPLOSION/BURN HAZA	1
7	1263542GT	DECAL, COMPARTMENT ACCESS	1
8	1272242GT	DECAL,MACHINE REGISTRATION/OWN	1
9	1286018GT	DECAL, BODY CRUSH, ROLLING TELE, SYM	1
10	1286019GT	DECAL, FOOT CRUSH, OUTRIG, SYM	2
11	1286020GT	DECAL, BURN HAZARD, SYM	1
12	1295539GT	DECAL,COSMETIC,GENIE GTH-1056,SMALL	2
13	1312355GT	DECAL,COSMETIC,GENIE GTH-1056,SMALL	1
14	1304217GT	DECAL, EXPLOSION HAZARD	1
15	1266019GT	DECAL, LABEL, SHELL TELLUS	1
16	82366GT	DECAL,CHEVRON RANDO HD	1

105.1 Decals with Symbols, Cab Side (to SN GTH10E-16264)

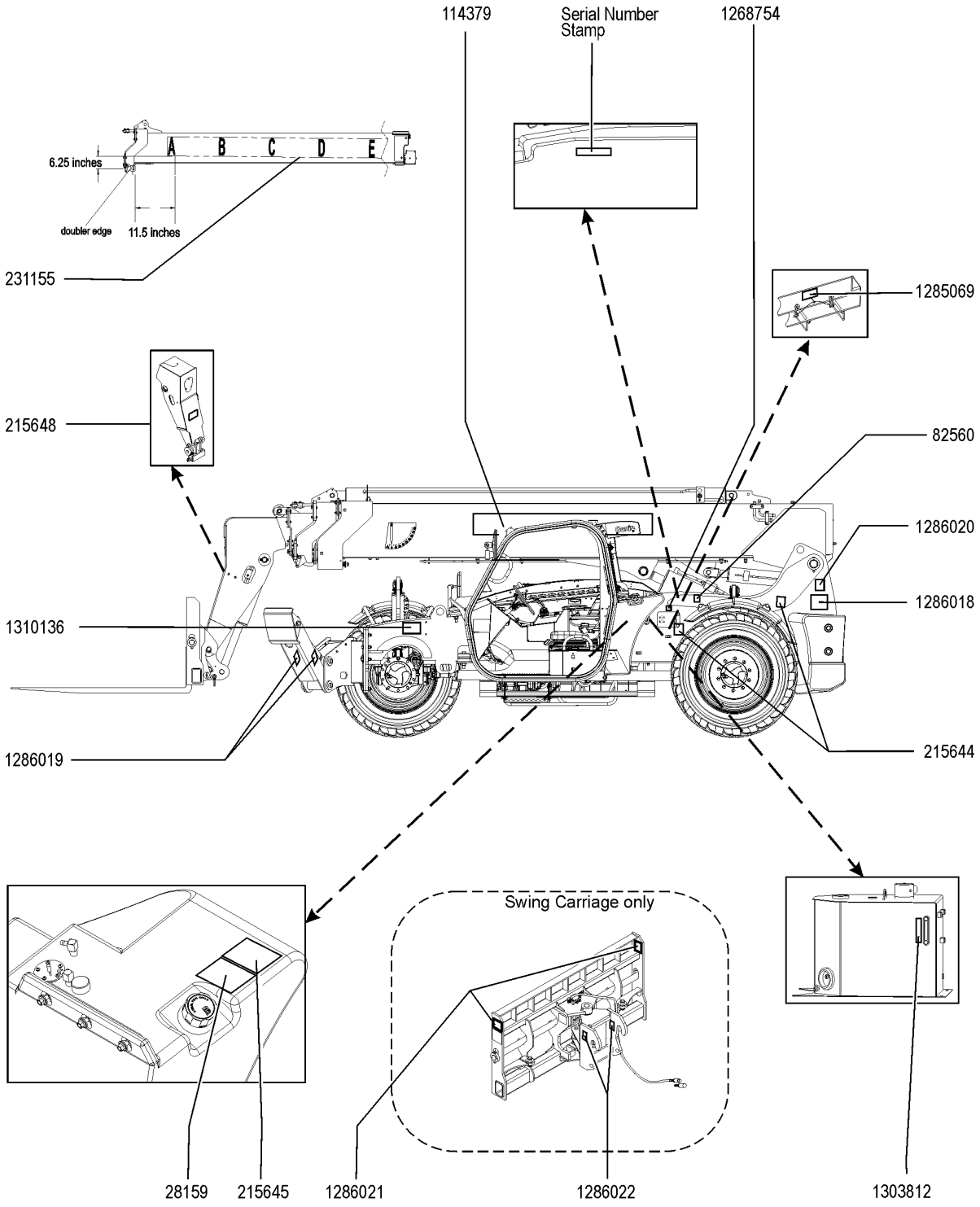

105.1 Decals with Symbols, Cab Side (to SN GTH10E-16264)

Item	Part No.	Description	Qty.
1	28159GT	DECAL,DIESEL	1
2	82560GT	DECAL,SYMBOL-SKIN INJECT HAZRD	1
3	114379GT	DECAL,COSMETIC,GENIE GTH-1056	1
4	215644GT	DECAL,WARNING,CRUSH HAZZARD,TI	1
5	215645GT	DECAL,DANGER,EXPLOSION/BURN,DI	1
6	215648GT	DECAL, FALL HAZARD	1
7	231155GT	DECAL, A-G, GTH1056, WHITE	1
8	1268754GT	DECAL,DEF FILL	1
9	1285069GT	DECAL – WARNING, CYLINDER CHOCK,SYMB	1
10	1286018GT	DECAL, BODY CRUSH, ROLLING TELE, SYM	1
11	1286019GT	DECAL, FOOT CRUSH, OUTRIG, SYM	2
12	1286020GT	DECAL, BURN HAZARD, SYM	1
13	1286021GT	DECAL, 48" FORKS ONLY, SYM	2
14	1286022GT	DECAL, CRUSH HAZ, MOVING PT, SYM	2
15	1303812GT	DECAL,HYDRAULIC,LEVEL	1
16	1310136GT	LABEL,TRANSPORTATION AND LIFT,10K	1

105.2 Decals with Symbols, Cab Side (From SN GTH10E-16265)

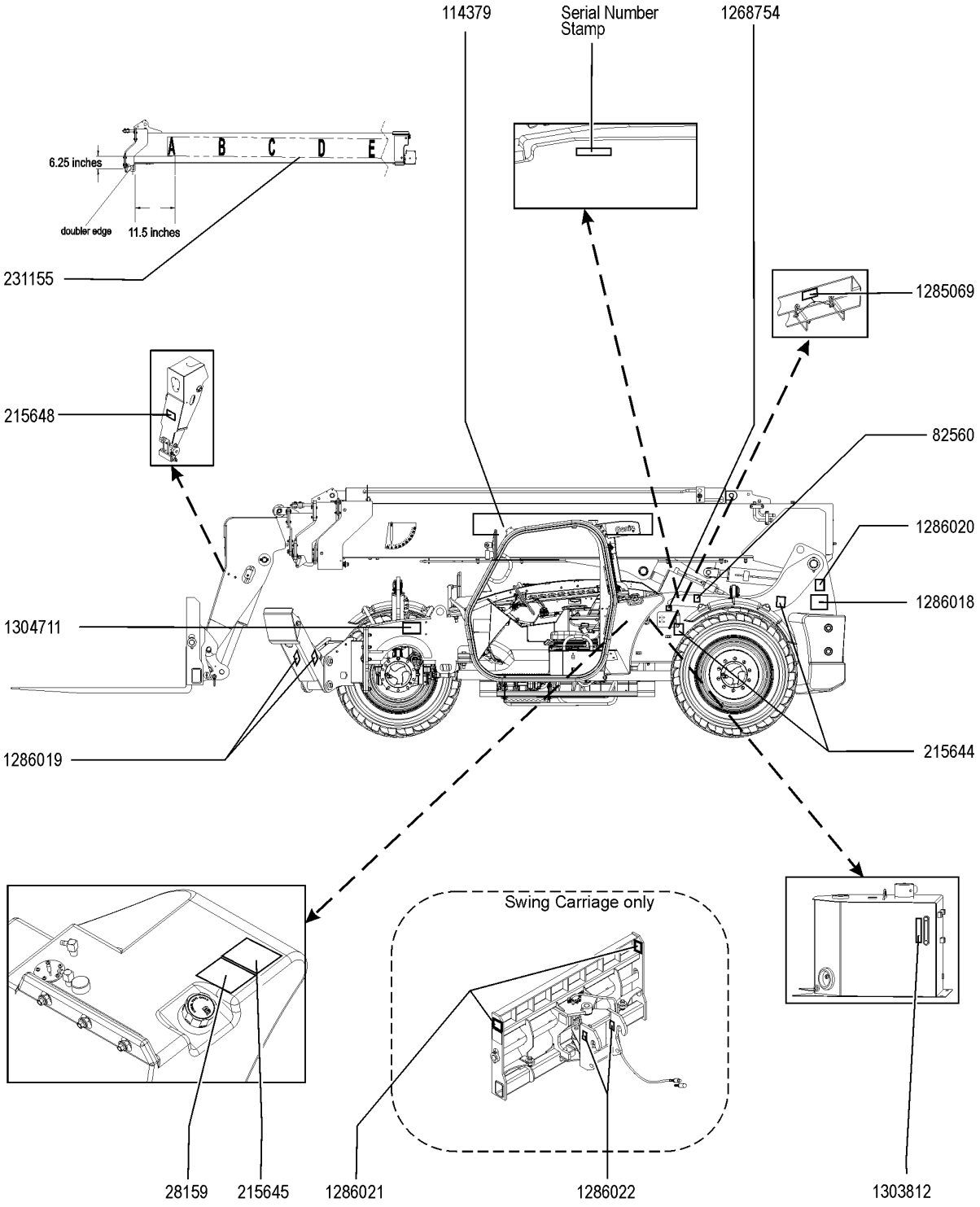

105.2 Decals with Symbols, Cab Side (From SN GTH10E-16265)

Item	Part No.	Description	Qty.
1	28159GT	DECAL,DIESEL	1
2	82560GT	DECAL,SYMBOL-SKIN INJECT HAZRD	1
3	114379GT	DECAL,COSMETIC,GENIE GTH-1056	1
4	215644GT	DECAL,WARNING,CRUSH HAZZARD,TI	1
5	215645GT	DECAL,DANGER,EXPLOSION/BURN,DI	1
6	215648GT	DECAL, FALL HAZARD	1
7	231155GT	DECAL, A-G, GTH1056, WHITE	1
8	1268754GT	DECAL,DEF FILL	1
9	1285069GT	DECAL – WARNING, CYLINDER CHOCK,SYMB	1
10	1286018GT	DECAL, BODY CRUSH, ROLLING TELE, SYM	1
11	1286019GT	DECAL, FOOT CRUSH, OUTRIG, SYM	2
12	1286020GT	DECAL, BURN HAZARD, SYM	1
13	1286021GT	DECAL, 48" FORKS ONLY, SYM	2
14	1286022GT	DECAL, CRUSH HAZ, MOVING PT, SYM	2
15	1303812GT	DECAL,HYDRAULIC,LEVEL	1
16	1304711GT	LABEL,TRANSPORTATION AND LIFT,10K/12K	1

106.1 Decals with Symbols, Cab

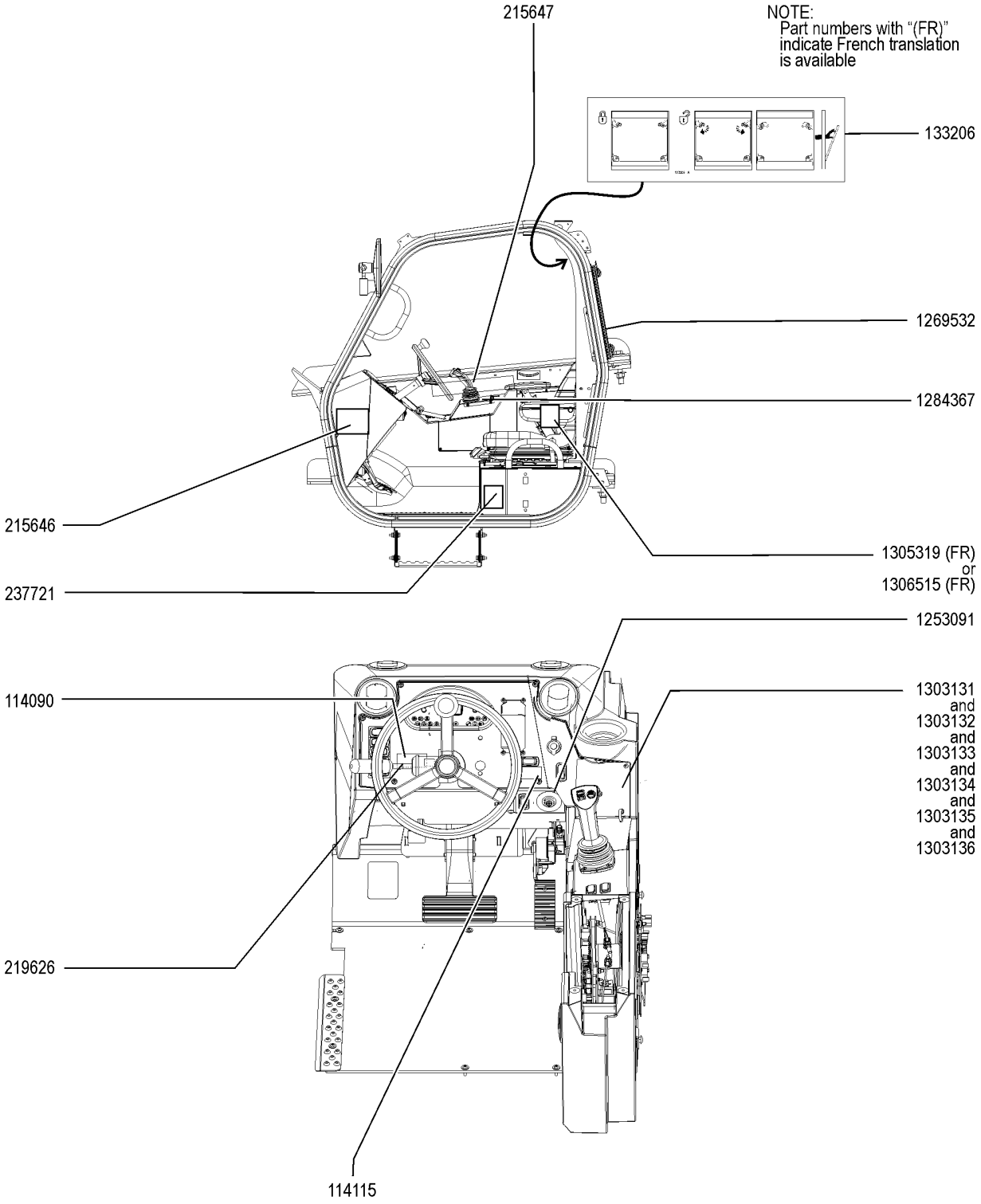

106.1 Decals with Symbols, Cab

Item	Part No.	Description	Qty.
1	114090GT	DECAL,TRANSMISSION CONTROL	1
2	114115GT	DECAL,STEERING SELECTOR	1
3	133206GT	DECAL,OPEN WINDOW INST	1
4	215646GT	DECAL, 2 DECAL COMBO	1
5	215647GT	DECAL, 2 DECAL COMBO	1
6	219626GT	DECAL,COSMETIC,GENIE DOMED,BLK	1
7	237721GT	DECAL,WARN,WEAR SEAT BELT	1
8	1253091GT	DECAL,KEY IGNITION, 8/10K	1
9	1269532GT	DECAL, SAFE T PUNCH	1
10	1284367GT	DECAL,UNIVERSAL CONTROLLER,2X5	1
11	1303131GT	CARD,LOAD CHART,GTH1056E,1-2	1
12	1303132GT	CARD,LOAD CHART,GTH1056E,2-3	1
13	1303133GT	CARD,LOAD CHART,GTH1056E,3-4	1
14	1303134GT	CARD,LOAD CHART,GTH1056E,4-5	1
15	1303135GT	CARD,LOAD CHART,GTH1056E,5-6	1
16	1303136GT	CARD,LOAD CHART,GTH1056E,6-7	1
17	1305319GT	DECAL,FUSE/RELAY BOARD,E. JOYSTICK,GTH	1
18	1306515GT	DECAL,FUSE/RELAY BOARD,CVT,GTH	1

201.1 Stabilizer Assembly (to SN GTH10E-16264)

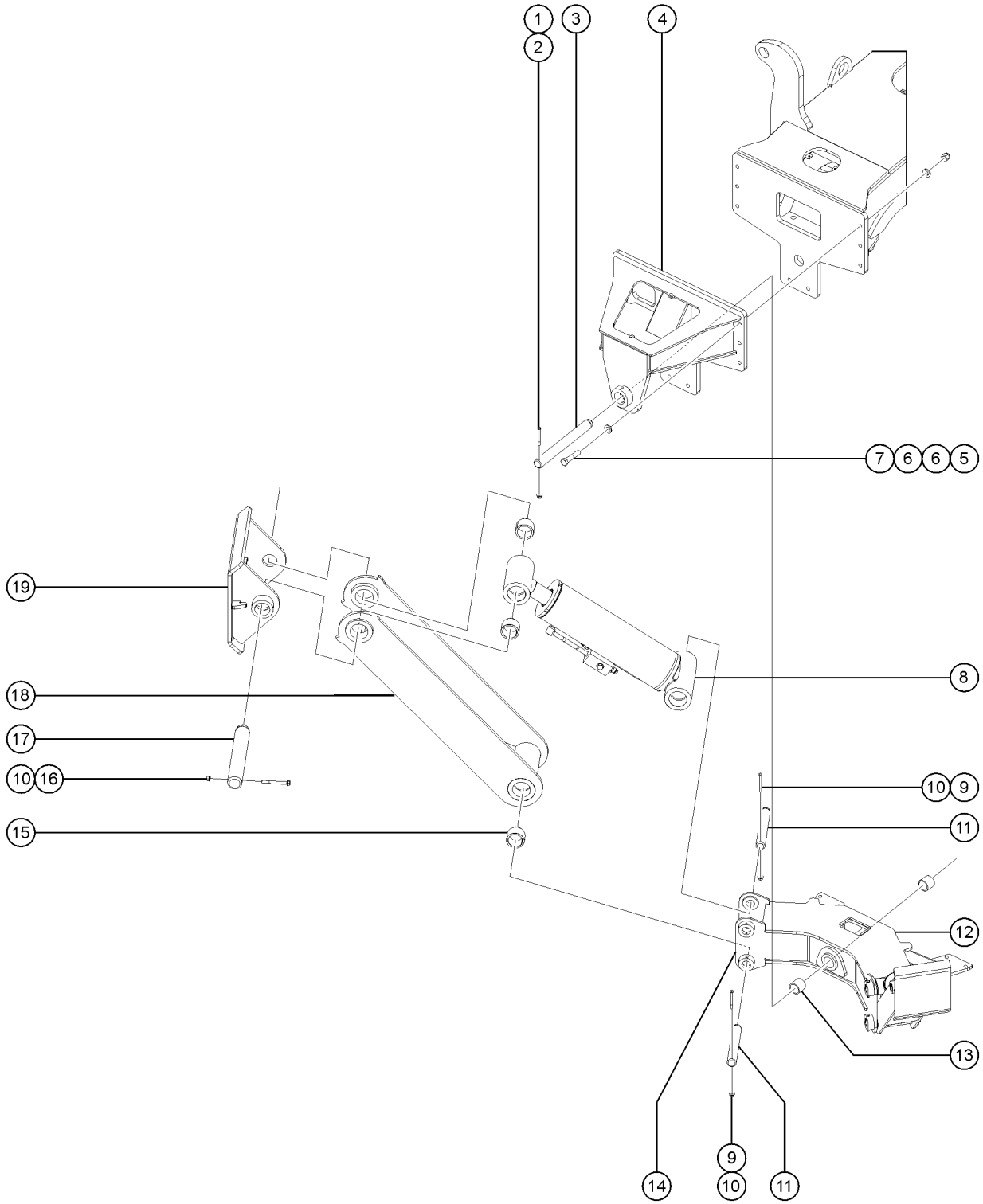

201.1 Stabilizer Assembly (to SN GTH10E-16264)

Item	*Part No.*	*Description*	*Qty.*
1	1257462GT	SCREW,HHC,1/2-13X5.25,8,ZAG	1
2	1274172GT	NUT,NYLOCK FLG,1/2-13,G,ZAG	1
3	1293452GT	PIN,2.50DIA X 22.50LG,1HOLE	1
4	1293457GT	WELDMENT,STABILIZER MOUNT	1
5	1257460GT	SCREW,HHC,3/4-10X3.5,8,ZAG	8
6	1256863GT	WASHER,FLAT,.75,F436,HRD,ZAG	16
7	77051GT	NUT,NYLOCK,3/4-10,GRD.8	8
8	1253247GT	CYLINDER,STABILIZER,1056	2
8-	123893GT	VALVE,CB.CBCG-LJN@3400	
8-	1258124GT	SEAL KIT,STAB CYLINDER 1253247	
9	1256173GT	SCREW,HHC,3/8-16X4.5,8,ZAG	4
10	1274322GT	NUT,NYLOCK FLG,3/8-16,F,ZAG	6
11	117104GT	PIN,2.00DIAX13.88LG,1HOLE	4
12	1293444GT	WELDMENT,PIVOT,STABILIZER	1
13	825767GT	BEARING,2.50IDX3.00ODX2.50LG	2
14	1293639GT	ASSEMBLY,PIVOT,STABILIZER	1
15	123188GT	BEARING,2.00IDX2.50ODX1.50L	8
16	824096GT	SCREW, HHF, 3/8-16 X 3.5, 8, ZAG	2
17	117344GT	PIN,2.00DIAX13.00LG,1HOLE	2
18	1293638GT	ASSEMBLY,ARM,STABILIZER (includes bearings)	2
18-	1293453GT	WELDEMENT,STABILIZER ARM	1
19	117090GT	WELDMENT,STABILIZER FOOTPAD	2

201.2 Stabilizer Assembly (from SN GTH10E-16265)

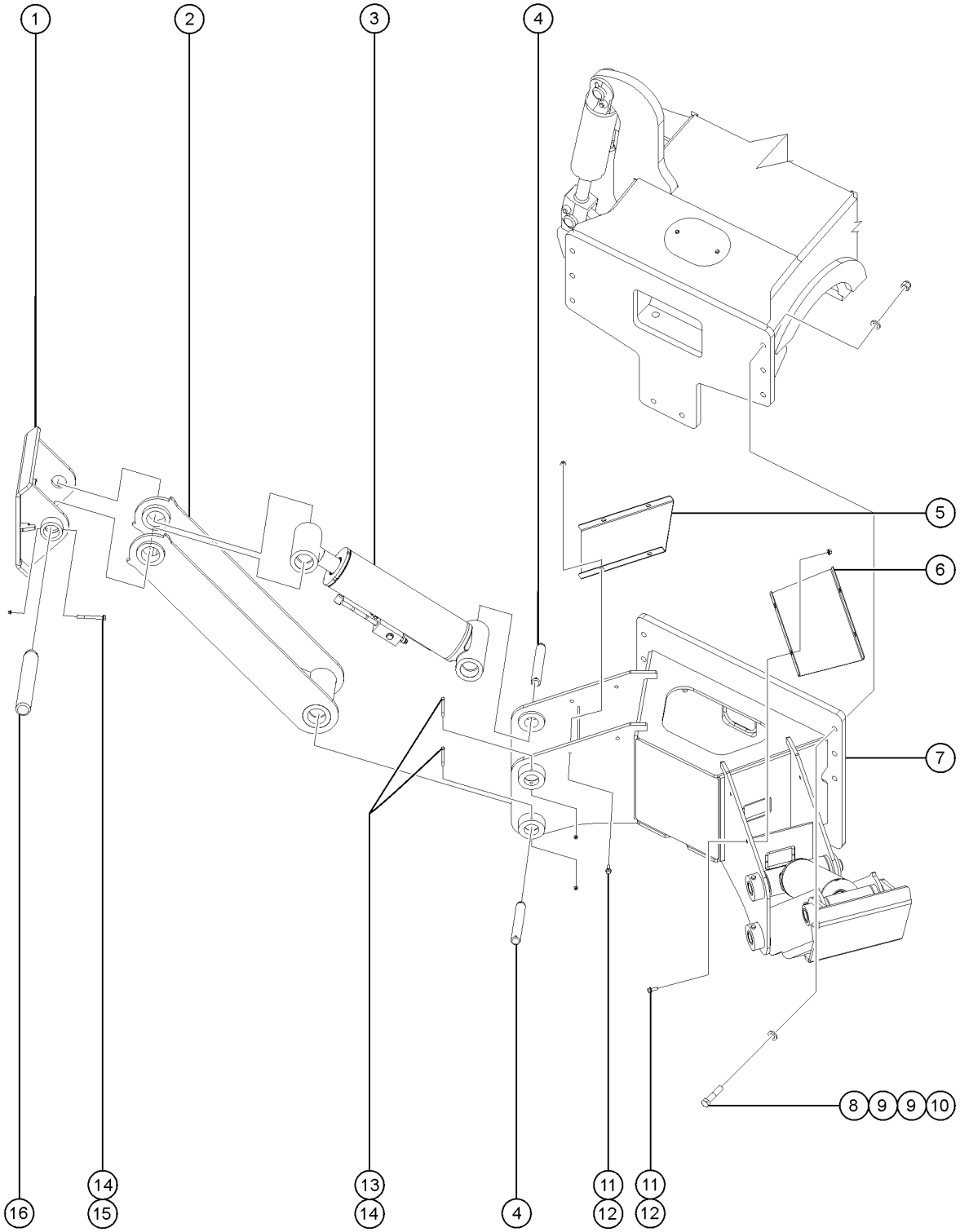

201.2 Stabilizer Assembly (from SN GTH10E-16265)

Item	*Part No.*	*Description*	*Qty.*
1	117090GT	WELDMENT,STABILIZER FOOTPAD	2
2	1306409GT	ASSEMBLY,ARM,STABILIZER (includes bearings)	2
3	1253247GT	CYLINDER,STABILIZER,1056	2
3-	123893GT	VALVE,CB.CBCG-LJN@3400	
3-	1258124GT	SEAL KIT,STAB CYLINDER 1253247	
4	117104GT	PIN,2.00DIAX13.88LG,1HOLE	4
5	1306467GT	FORMING, COVER PLATE, STABILIZER MOUNT	1
6	1306510GT	FORMING, COVER PLATE, STABILIZER MOUNT	1
7	1306408GT	WELDMENT, STABILIZER MOUNT, FIXED	1
8	1257460GT	SCREW,HHC,3/4-10X3.5,8,ZAG	8
9	1256863GT	WASHER,FLAT,.75,F436,HRD,ZAG	16
10	77051GT	NUT,NYLOCK,3/4-10,GRD.8	8
11	824090GT	SCREW,HHF,3/8-16X1,8,ZAG use until exhaust replaced by 824091GT	8
11B	824091GT	SCREW, HHF, 3/8-16 X 1.25, 8, ZAG	8
12	824029GT	NUT, TL FLG, 3/8-16, G, ZAG use until exhaust replaced by 1274322GT	8
12B	1274322GT	NUT,NYLOCK FLG,3/8-16,F,ZAG	8
13	1256173GT	SCREW,HHC,3/8-16X4.5,8,ZAG	4
14	1274322GT	NUT,NYLOCK FLG,3/8-16,F,ZAG	6
15	824096GT	SCREW, HHF, 3/8-16 X 3.5, 8, ZAG	2
16	117344GT	PIN,2.00DIAX13.00LG,1HOLE	2

202.1 Front Axle View (to SN GTH10E-16264)

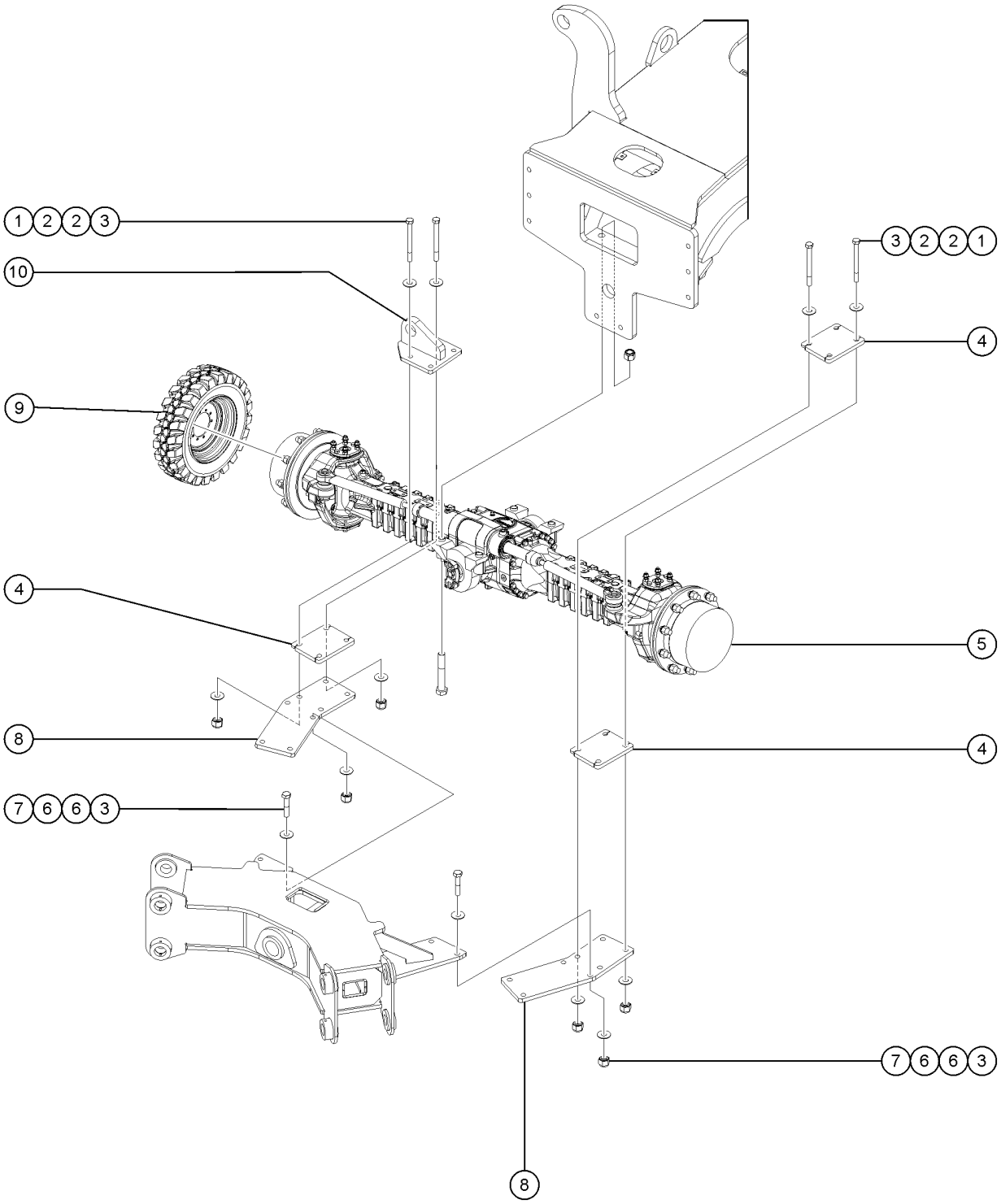

202.1 Front Axle View (to SN GTH10E-16264)

Item	Part No.	Description	Qty.
1	1257461GT	SCREW,HHC,3/4-10X12,8,ZAG	8
2	1255761GT	WASHER,FLAT,3/4,USS,HRD,ZAG	16
3	77051GT	NUT,NYLOCK,3/4-10,GRD.8	16
4	1253929GT	PLATE,CYLINDER MOUNTING	3
5		REF. AXLE Refer to 206.1	
6	1256863GT	WASHER,FLAT,.75,F436,HRD,ZAG	16
7	1257459GT	SCREW,HHC,3/4-10X3,8,ZAG	8
8	1293456GT	PLATE,CONNECTOR,STAB/AXLE	2
9	1303236GT	TIRE & WHEEL, 14X28 AIR, ENDURO Air filled (front and rear wheel included)	4
9-	1303239GT	WHEEL,14X28, 10 HOLE	1
9-	1303241GT	TIRE,ENDURO,14X28,12PR	1
9B	1303238GT	TIRE & WHEEL, 14X28 FOAM FILL, ENDURO Foam filled (front and rear wheel included)	4
9B-	1303239GT	WHEEL,14X28, 10 HOLE	1
9B-	1303241GT	TIRE,ENDURO,14X28,12PR	1
9C	1303216GT	TIRE & WHEEL, 14X28 AIR, LEFT Air filled	2
9C-	1303217GT	TIRE & WHEEL, 14X28 AIR, RIGHT Air filled	2
9D	1303219GT	TIRE & WHEEL, 14X28 FOAM, RIGHT Foam Filled	2
9D-	1303220GT	TIRE & WHEEL, 14X28 FOAM, LEFT Foam Filled	2
9E	1303655GT	TIRE&WHEEL, 14X28, CRUMB, NM	4
9F	1303666GT	TIRE&WHEEL, 14X28, SOLID Solid	4
10	1291512GT	WELDMENT,LOWER CYL MOUNT	1

202.2 Front Axle View (from SN GTH10E-16265)

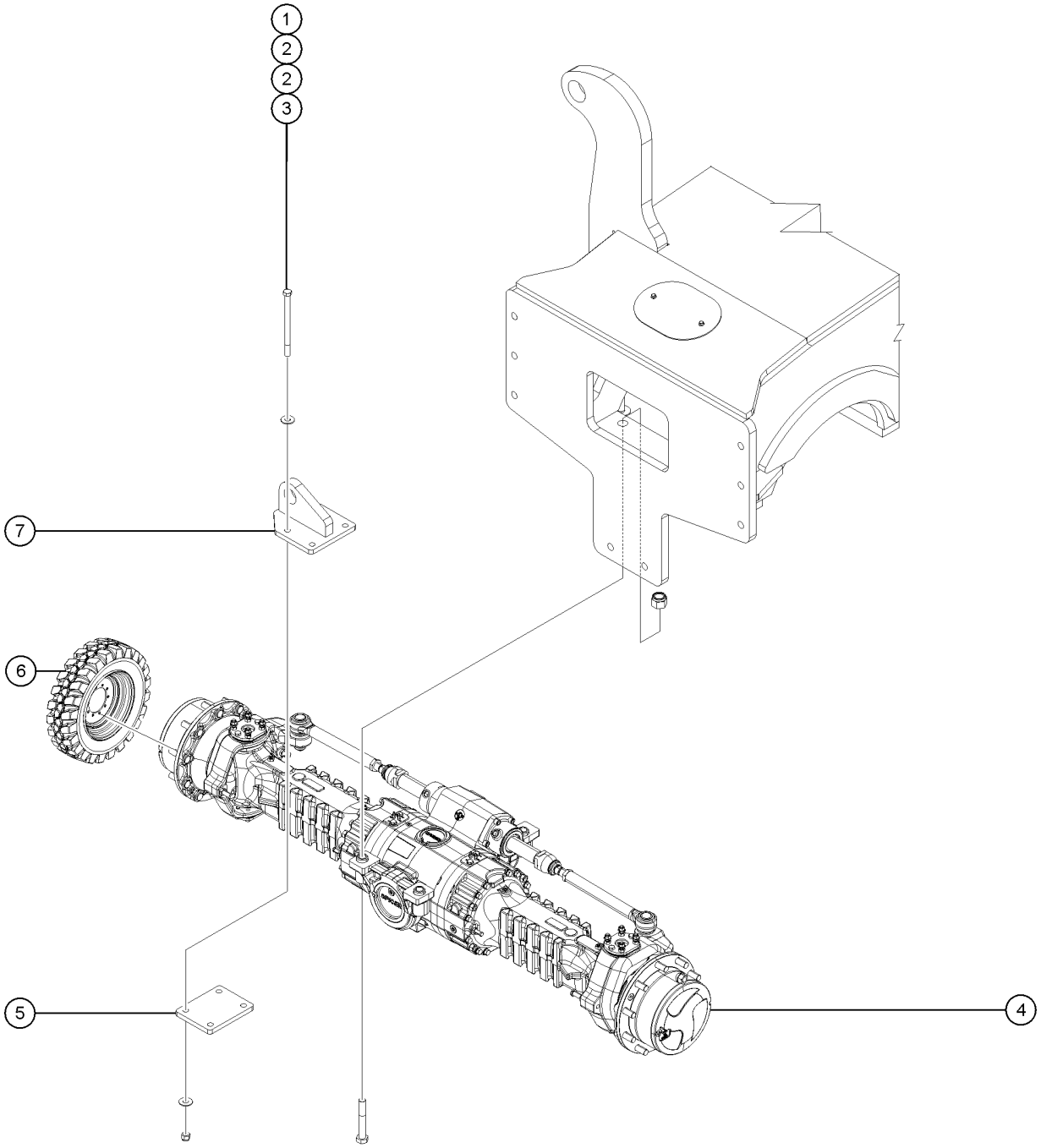

202.2 Front Axle View (from SN GTH10E-16265)

Item	Part No.	Description	Qty.
1	1257908GT	SCREW,HHC,3/4-10X11,8,ZAG	4
2	1255761GT	WASHER,FLAT,3/4,USS,HRD,ZAG	8
3	77051GT	NUT,NYLOCK,3/4-10,GRD.8	4
4	1307066GT	AXLE,DANA,223,FRONT,45DEG, STD. CYL, LSD, 20.66 Refer to 206.2	1
5	1253929GT	PLATE,CYLINDER MOUNTING	1
6	1303236GT	TIRE & WHEEL, 14X28 AIR, ENDURO Air filled (front and rear wheel included)	4
6-	1303239GT	WHEEL,14X28, 10 HOLE	1
6-	1303241GT	TIRE,ENDURO,14X28,12PR	1
6B	1303238GT	TIRE & WHEEL, 14X28 FOAM FILL, ENDURO Foam filled (front and rear wheel included)	4
6B-	1303239GT	WHEEL,14X28, 10 HOLE	1
6B-	1303241GT	TIRE,ENDURO,14X28,12PR	1
6C	1303216GT	TIRE & WHEEL, 14X28 AIR, LEFT Air filled	2
6C-	1303217GT	TIRE & WHEEL, 14X28 AIR, RIGHT Air filled	2
6D	1303219GT	TIRE & WHEEL, 14X28 FOAM, RIGHT Foam Filled	2
6D-	1303220GT	TIRE & WHEEL, 14X28 FOAM, LEFT Foam Filled	2
6E	1303655GT	TIRE&WHEEL, 14X28, CRUMB, NM	4
6F	1303666GT	TIRE&WHEEL, 14X28, SOLID Solid	4
7	1291512GT	WELDMENT,LOWER CYL MOUNT	1

202.2 Front Chassis Assembly

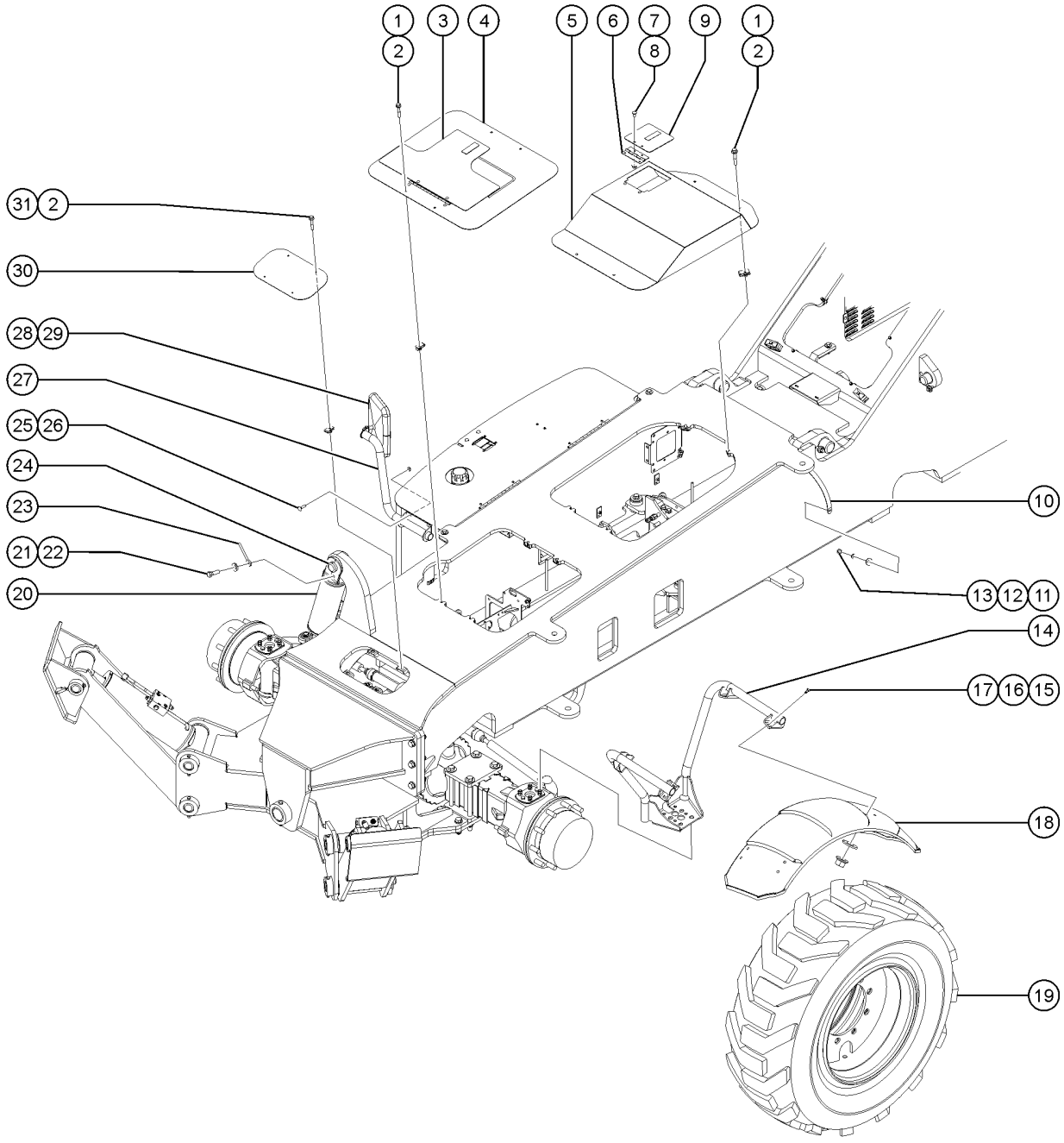

Item	Part No.	Description	Qty.
1	824081GT	SCREW,HHF,1/4-20X1.5,8,ZAG	12
2	56912GT	SPRING CLIP,1/4-20,.025-.15X.54,ZAG	12
3	1262231GT	PLATE,DOOR,ACCESS.DEF,10K,T4F	1
3-	123287GT	LATCH,COMPRESSION,WIDE GRIP	
4	1262230GT	PLATE,MANIFOLD COVER	1
5	215783GT	WELDMENT, ZF TRANS.COVER	1
6	123556GT	HINGE,ACCESS COVER	1
7	824124GT	BOLT, CARRIAGE, 1/4-20 X .75, 5, ZAG	4
8	824027GT	NUT, TL FLG, 1/4-20, G, ZAG	4
9	218049GT	PLATE, TRANS.DIPSTICK COVER	1
9-	123287GT	LATCH,COMPRESSION,WIDE GRIP	1
10	7-319-17GT	GROUND STRAP,12 IN.	1
11	1255887GT	SCREW,HHC,5/16-18X.5,8,ZAG	2
12	1255764GT	WASHER,LOCK,5/16,ZAG	2
13	825358GT	WASHER,FLAT,5/16,USS,ZAG	2
14	1261704GT	WELDMENT,FENDER FRAME,UNIV	4
14-	123920GT	CAP,LDPE,1.50"ODX10-14 GA WALL	
15	824125GT	BOLT, CARRIAGE, 3/8-16 X 1, 5, ZAG replaced by 1255757GT	32
15B	1255757GT	BOLT,CARRIAGE,3/8-16X1.25,5,ZAG	32
16	1255760GT	WASHER,FLAT,1/2,USS,ZAG	32
17	824029GT	NUT, TL FLG, 3/8-16, G, ZAG replaced by 1274322GT	32
17B	1274322GT	NUT,NYLOCK FLG,3/8-16,F,ZAG	32
18	1253180GT	ASSEMBLY,FENDER,CAB SIDE	2
18B	1253182GT	ASSEMBLY,FENDER,ENGINE SIDE	2
19	1303216GT	TIRE & WHEEL, 14X28 AIR, LEFT RT, Air-filled, 12 ply, left	2
19	1303217GT	TIRE & WHEEL, 14X28 AIR, RIGHT RT, Air-filled, 12 ply, right	2
19B	1264068GT	WHEEL,10X28,0.5" INSET for 1303217, 1303216 (No longer available,Replaced by 1303239)	
19C	1303239GT	WHEEL,14X28, 10 HOLE	

202.2 Front Chassis Assembly

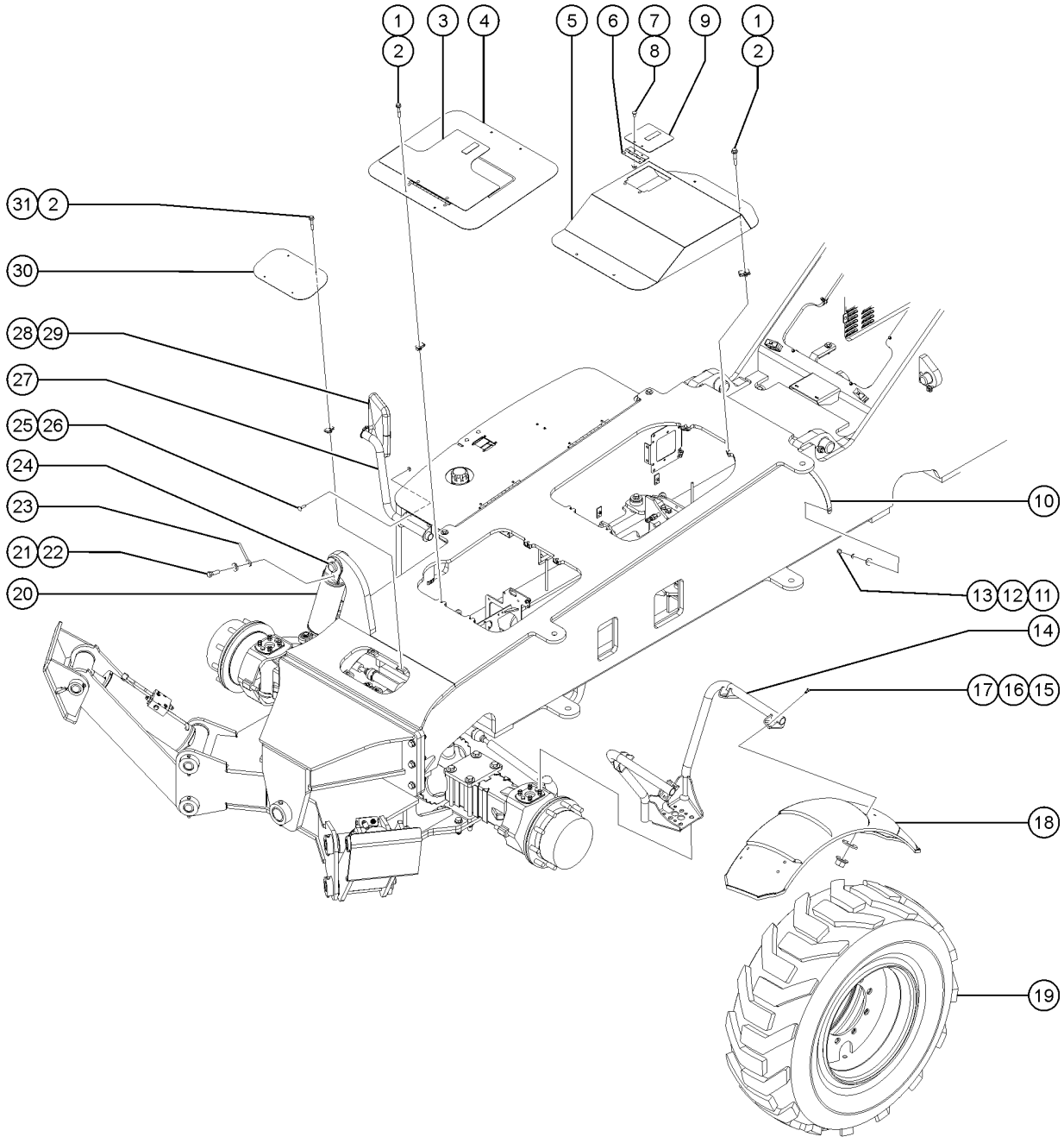

Item	Part No.	Description	Qty.
19D	1264069GT	TIRE,EXTREMELIFT,14X28,12PR for 1303217, 1303216 (No longer available,Replaced by 1303240)	
19E	1303240GT	TIRE, 14X28,12PR	
19F	1264072GT	TIRE&WHEEL,14X28,CRUMB,LEFT RT, Crumb-Polyurethane filled, left (No longer available,Replaced by 1303219)	2
19F-	1264069GT	TIRE,EXTREMELIFT,14X28,12PR	
19F-	1264068GT	WHEEL,10X28,0.5" INSET	
19G	1303219GT	TIRE & WHEEL, 14X28 FOAM, RIGHT	2
19G-	1303239GT	WHEEL,14X28, 10 HOLE	
19G-	1303240GT	TIRE, 14X28,12PR	
19H	1264073GT	TIRE&WHEEL,14X28,CRUMB,RIGHT RT, Crumb-Polyurethane filled, right (No longer available,Replaced by 1303220)	2
19H-	1264069GT	TIRE,EXTREMELIFT,14X28,12PR	
19H-	1264068GT	WHEEL,10X28,0.5" INSET	
19I	1303220GT	TIRE & WHEEL, 14X28 FOAM, LEFT	2
19I-	1303239GT	WHEEL,14X28, 10 HOLE	
19I-	1303240GT	TIRE, 14X28,12PR	
19J	160340GT	TIRE&WHEEL,14X24 FOAM,RH,12PR RT, Foam-filled, 12 ply, right	2
19J	160341GT	TIRE&WHEEL,14X24 FOAM,LH,12PR RT, Foam-filled, 12 ply, left	2
19K	160342GT	TIRE&WHEEL,14X24 AIR,RH,12PR RT, Air-filled, 12 ply, right	2
19K	160343GT	TIRE&WHEEL,14X24 AIR,LH,12PR RT, Air-filled, 12 ply, left	2
19K-	117583GT	WHEEL,9X24,0.5"INSET for 160342, 160343,(No longer available Order as complete Assembly)	
19K-	160344GT	TIRE,FIRESTONE SSG,14X24,12PR for 160342, 160343	
19L	823117GT	TIRE&WHEEL,SOLIDBOSS,14X24,RH Solidboss, foam-filled, right	2
19L	823118GT	TIRE&WHEEL,SOLIDBOSS,14X24,LH Solidboss, foam-filled, left	2
19M	1294526GT	TIRE&WHEEL, 14X28, AIR, ROCK LUG Rock Lug, Air-filled (No longer available,Replaced by 1303236)	4
19M-	1264068GT	WHEEL,10X28,0.5" INSET	
19M-	1294470GT	TIRE,ROCK LUG,14X28,16PR	
19N	1303236GT	TIRE & WHEEL, 14X28 AIR, ENDURO	4
19N-	1303239GT	WHEEL,14X28, 10 HOLE	
19N-	1303241GT	TIRE,ENDURO,14X28,12PR	

202.2 Front Chassis Assembly

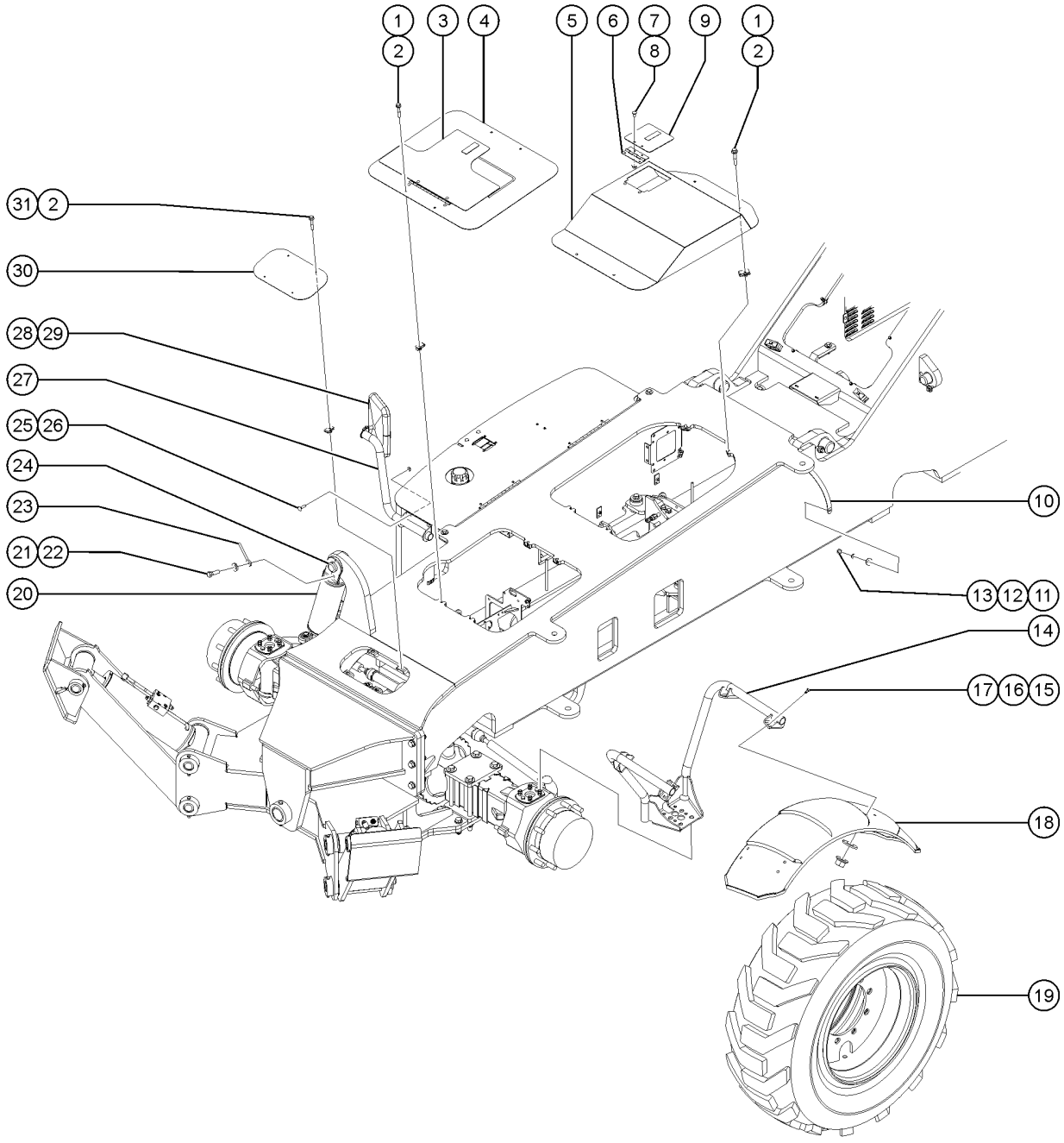

Item	Part No.	Description	Qty.
19O	1264068GT	WHEEL,10X28,0.5" INSET for 1294526 (No longer available,Replaced by 1303239)	
19P	1303239GT	WHEEL,14X28, 10 HOLE	
19Q	1294527GT	TIRE&WHEEL, 14X28, CRUMB, ROCK LUG Rock Lug, Crumb-Polyurethane filled (No longer available,Replaced by 1303238)	4
19R	1303238GT	TIRE & WHEEL, 14X28 FOAM FILL, ENDURO	4
20	1253248GT	CYLINDER,SWAY,1056	1
20-	123894GT	VALVE,CB.CBCG-LJN@3200	2
20-	1258125GT	SEAL KIT, SWAY CYL 1253248/49	
20B	123192GT	CLAMP HALVES,TWIN,5/8"TUBE for 1253248	2
20B-	123176GT	PLATE, TOP for 123192	1
20B-	1255763GT	SCREW,HHF,5/16-18X1.5,8,ZAG for 123192	1
21	824068GT	SCREW, HHC, 3/8-16 X 1.25, 8, ZAG	1
22	824110GT	WASHER, LOCK, 3/8, ZAG	1
23	825019GT	ROD END, .375X3.69, ZAG	1
24	117125GT	PIN,2.00DIAX4.00LG,1 HOLE to SN GTH10E-16264	1
24-	123188GT	BEARING,2.00IDX2.50ODX1.50L	
25	1256127GT	BOLT,CARRIAGE,1/4-20X1",GR 5,ZAG	2
26	1277924GT	NUT,NYLOCK FLG,1/4-20,F,ZAG	2
27	1279263GT	WELDMENT,MIRROR ARM	1
28	229853GT	MIRROR, CONVEX, 8X12 (T4F chassis) no longer available	1
28-	123142GT	MIRROR,8 1/2,CONVEX (T3 chassis)	
28B	1327223GT	KIT, GTH MIRROR	1
28B-	1327224GT	INSTRUCTIONS, GTH MIRROR	1
28B-	1327225GT	MIRROR, CONVEX, 7.5 X 10.5	1
29	1274322GT	NUT,NYLOCK FLG,3/8-16,F,ZAG	1
30	117062GT	PLATE,FRONT AXLE COVER	1
31	824078GT	SCREW,HHF,1/4-20X.75,8,ZAG	4

203.1 Engine Tray

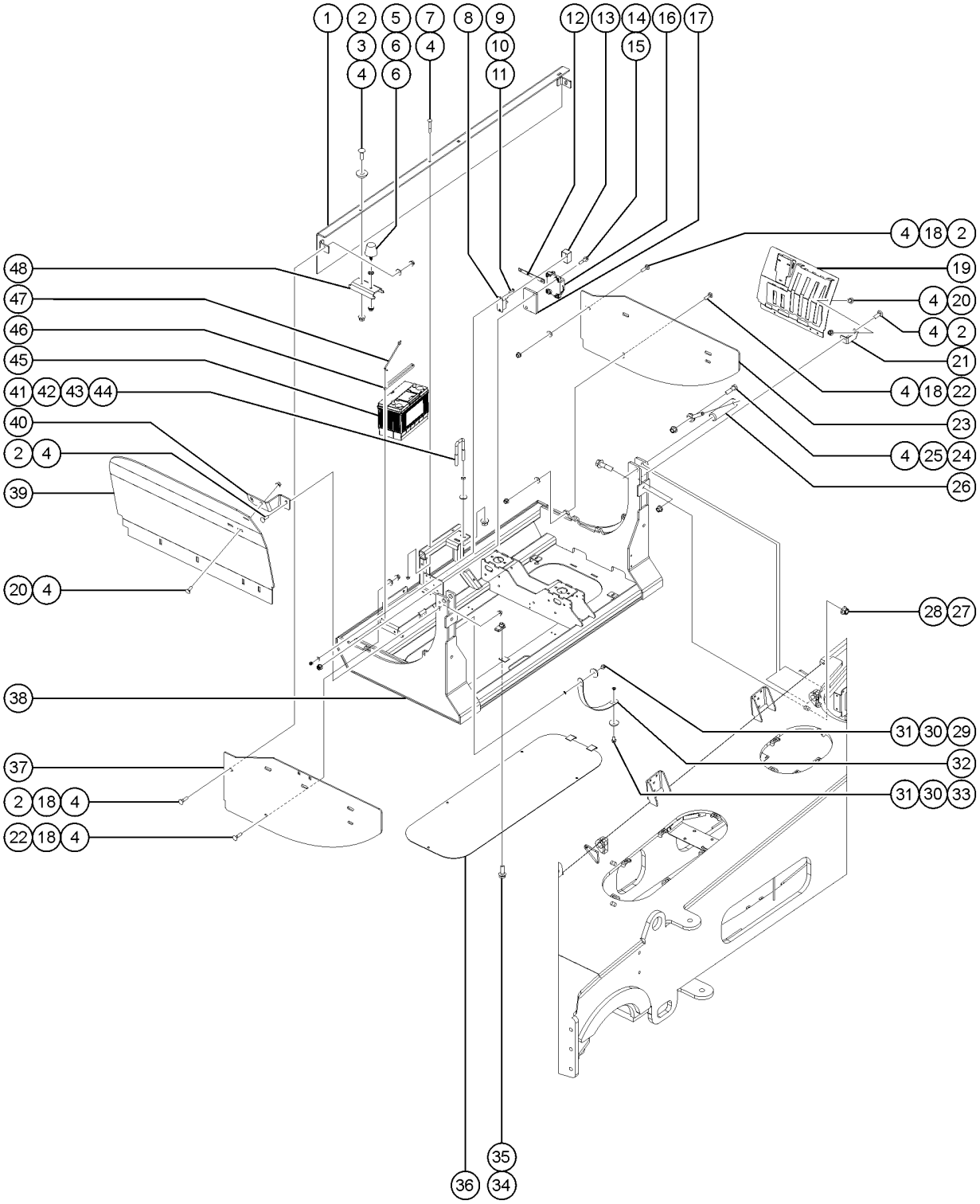

203.1 Engine Tray

Item	Part No.	Description	Qty.
1	1292968GT	WELDMENT,FRONT PLATE,ENGINE TRAY	1
2	1255757GT	BOLT,CARRIAGE,3/8-16X1.25,5,ZAG	5
3	141745GT	WASHER,HARDEND 1.375X.531X.177	2
4	1274322GT	NUT,NYLOCK FLG,3/8-16,F,ZAG	17
5	30973GT	BUMPER,RUBBER-1 X 1.25	2
6	1255805GT	NUT,SERRATED,5/16-18,8,ZAG	4
7	1260076GT	BOLT,CARRIAGE,3/8-16X2.75,5,ZAG	2
8	229994GT	CIRCUIT BREAKER, 50 AMP	1
9	1253490GT	SCREW,PHPM,8-32 X .75,ZAG	2
10	1257390GT	WASHER,FLAT,#8,SAE,ZAG	2
11	18605GT	NUT,NYLOCK,8-32	2
12	1262330GT	PLATE, BUSS BAR	1
13	123677GT	CIRCUIT BREAKER BOOT	1
14	824080GT	SCREW, HHF, 1/4-20 X 1.25, 8, ZAG	2
15	1277924GT	NUT,NYLOCK FLG,1/4-20,F,ZAG	2
16	233569GT	CIRCUIT BREAKER: 60 AMP	1
16	1307893GT	CIRCUIT BREAKER,60A/42VDC	1
17	824856GT	PLATE, SPACER	1
18	1255758GT	WASHER,FLAT,3/8,USS,ZAG	6
19	1263754GT	WELDMENT,COVER,REAR GUARD,8K	1
20	824125GT	BOLT, CARRIAGE, 3/8-16 X 1, 5, ZAG	3
21	1300107GT	FORMING, SUPPORT, INTAKE WELDMENT,GTH1056	1
22	1256756GT	BOLT,CARRIAGE,3/8-16X1.5,5,ZAG	4
23	1296431GT	PLATE,REAR SIDE BOLT ON,ENGINE TRAY	1
24	1256118GT	SCREW,HHC,3/8-16X1.5,8,ZAG	2
25	1255452GT	ROD END,.375 X 2.25,ZAG	2
26	1291358GT	PIN,1.00X4.00,1 HOLE	2
27	1283007GT	NUT,NYLOCK FLG,5/8-11,F,ZAG	4

203.1 Engine Tray

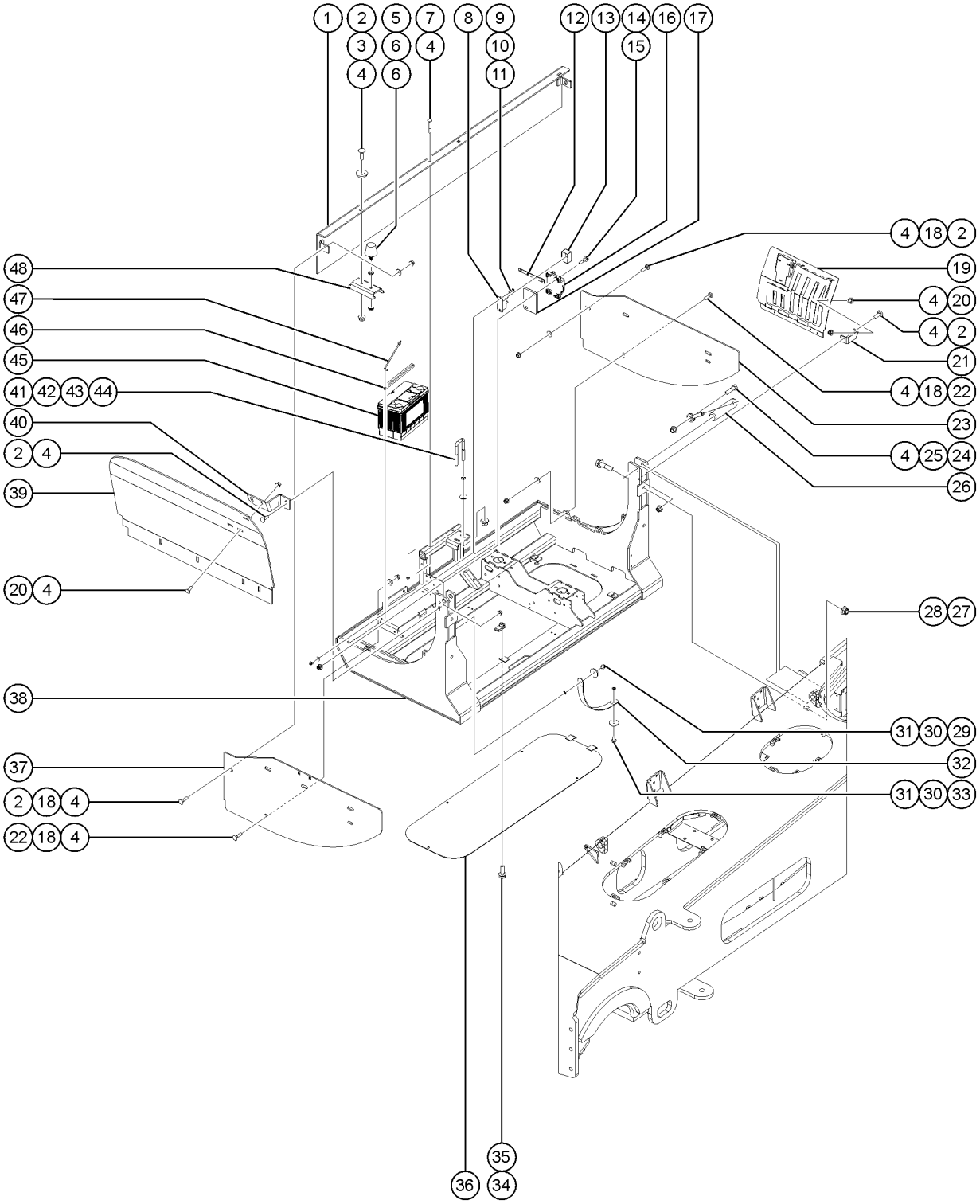

203.1 Engine Tray

Item	Part No.	Description	Qty.
28	1259896GT	SCREW,HHF,5/8-11X2.5,8,ZAG	4
29	1255765GT	SCREW,HHF,5/16-18X.5,8,ZAG	1
30	824120GT	WASHER,FLAT,.375X1.50X.125,ZAG	2
31	1255764GT	WASHER,LOCK,5/16,ZAG	2
32	7-319-17GT	GROUND STRAP,12 IN.	1
33	824085GT	SCREW, HHF, 5/16-18 X .75, 8, ZAG	1
34	824086GT	SCREW,HHF,5/16-18X1,8,ZAG	5
35	36456GT	SPRING CLIP,5/16-18,.025-.15X.	5
36	1292739GT	WELDMENT,BOTTOM PLATE,ENGINE TRAY	1
37	1289887GT	PLATE,SIDE BOLT ON,ENGINE TRAY	1
38	1289923GT	WELDMENT,ENGINE TRAY,10K	1
39	1255852GT	FORMING,FBG ENGINE COVER,FRONT	1
40	1300106GT	FORMING,FBG COVER BRACE,FRONT,GTH1056	1
41	1254805GT	BOLT,U-BOLT,LATCH STRIKER,TRAY	1
42	1255804GT	NUT,JAM,1/2-13,A,ZAG	2
43	1255760GT	WASHER,FLAT,1/2,USS,ZAG	2
44	1274172GT	NUT,NYLOCK FLG,1/2-13,G,ZAG	2
45	1303581GT	BATTERY, 12V, 950CCA, FLA	1
46	1254056GT	FORMING,BATTERY HOLDDOWN	1
47	123150GT	HOOK, BATTERY HOLD DOWN Use until exhausted	2
47B	1320740GT	HOOK, BATT HOLD DOWN, 2 PACK Replaces 123150GT	2
48	1255001GT	FORMING,BUMPER STRIKER,TRAY	2

204.1 Engine Cover

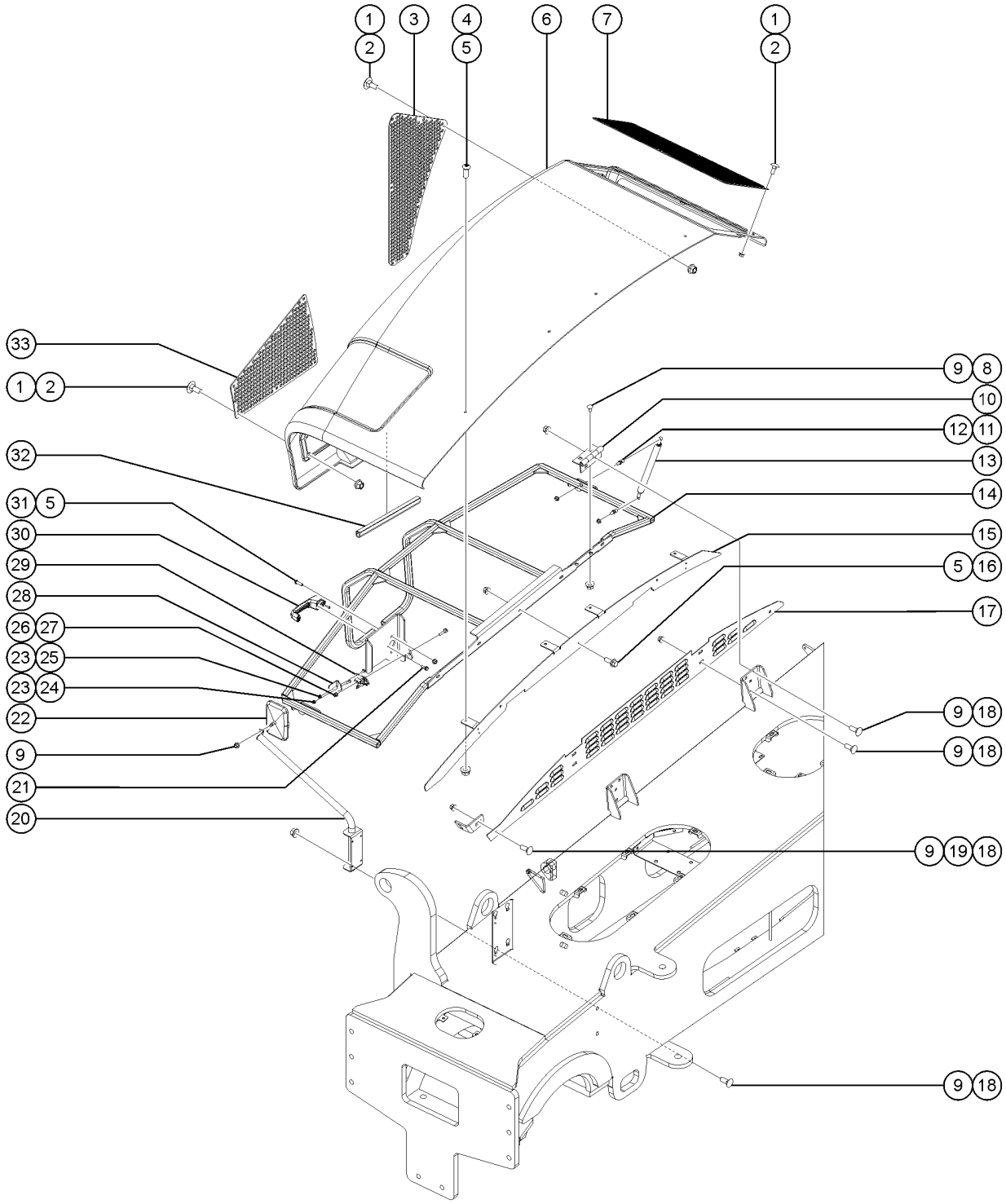

204.1 Engine Cover

Item	Part No.	Description	Qty.
1	822352GT	BOLT, CARRIAGE,M6=1.0X16,ZAB	19
2	231513GT	NUT,TL FLG,M6-1.0,DIN6927,10,ZAB	19
3	1295832GT	PLATE,VENT,SIDE,REAR	1
4	1255393GT	SCREW,BHC,3/8-16X1,F835,ZAG	4
5	824029GT	NUT, TL FLG, 3/8-16, G, ZAG	13
6	1290829GT	COVER,ENGINE,FIBERGLASS	1
7	1295833GT	PLATE,VENT,TOP	1
8	1256835GT	BOLT,CARRIAGE,3/8-16X.75,5,ZAG	4
9	1274322GT	NUT,NYLOCK FLG,3/8-16,F,ZAG	19
10	55517GT	HINGE, GSRT90 BOX	2
11	33555GT	BALL STUD**	4
12	1255805GT	NUT,SERRATED,5/16-18,8,ZAG	4
13	1264917GT	STRUT, GAS, 145 LB, 24" to SN GTH10E-16246	2
13B	1312001GT	STRUT, GAS, 160 LB, 24" from SN GTH10E-16247	2
14	1279233GT	WELDMENT,ENGINE COVER,FBG,GTH844	1
15	1295835GT	WELDMENT,ENGINE COVER,REAR	1
16	824090GT	SCREW,HHF,3/8-16X1,8,ZAG	5
17	1263702GT	FORMING, LOUVER, ENGINE COVER	1
18	824125GT	BOLT, CARRIAGE, 3/8-16 X 1, 5, ZAG	14
19	1279229GT	FORMING, SUPPORT, END PLATE, 26.4 DEG,GTH844D	1
20	1255512GT	WELDMENT,MIRROR ARM	1
21	231532GT	SCREW,HHF,M6-1.0X20,DIN6921,10.9,ZAB	2
22	229853GT	MIRROR, CONVEX, 8X12 no longer available	1
22B	1327223GT	KIT, GTH MIRROR	1
22B-	1327224GT	INSTRUCTIONS, GTH MIRROR	1
22B-	1327225GT	MIRROR, CONVEX, 7.5 X 10.5	1
23	1277924GT	NUT,NYLOCK FLG,1/4-20,F,ZAG	2
24	22283GT	SCREW,SHC,1/4-20 X .75	1

204.1 Engine Cover

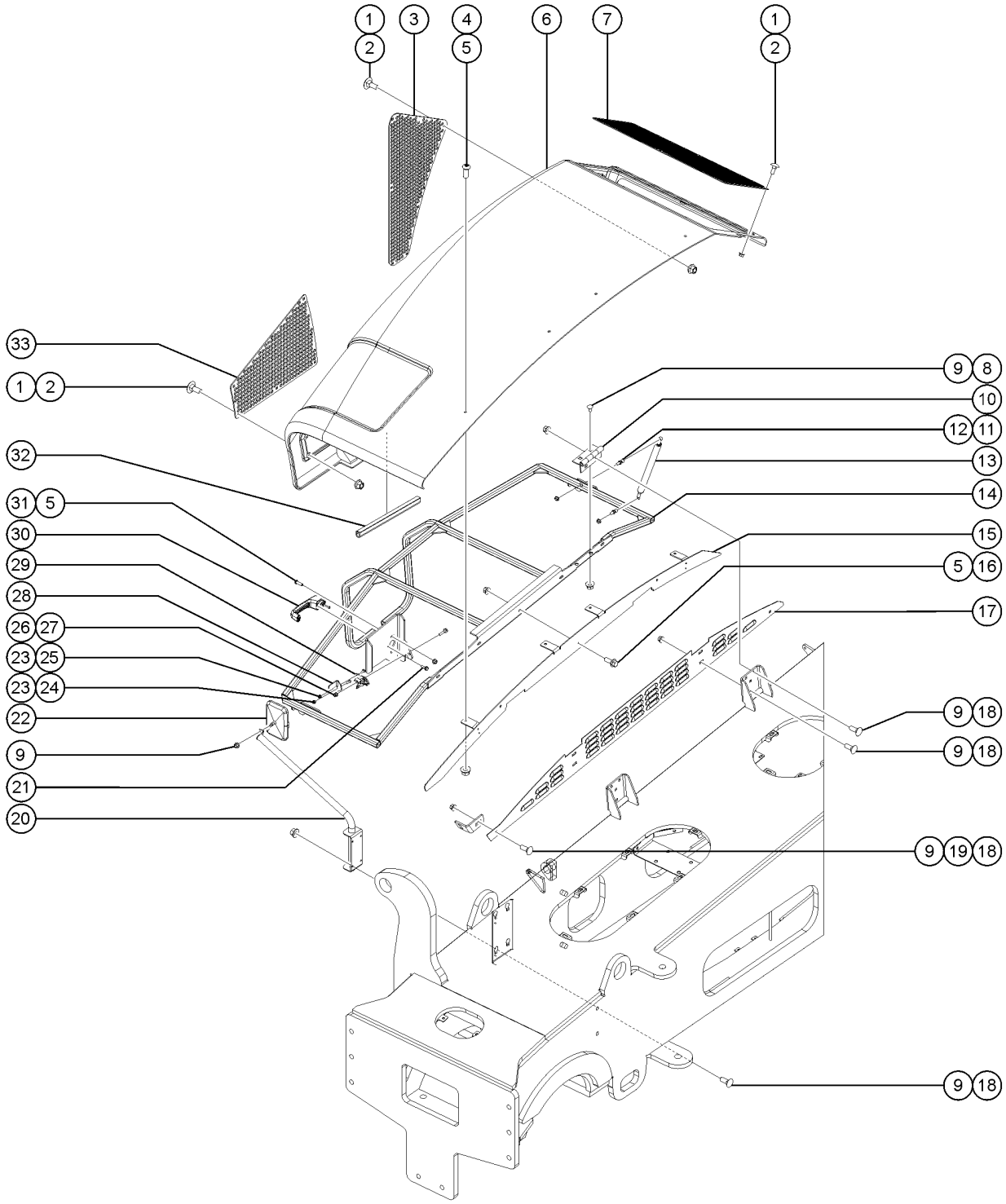

204.1 Engine Cover

Item	Part No.	Description	Qty.
25	824059GT	SCREW, HHC, 1/4-20 X .75, 8, ZAG	1
26	1283014GT	NUT,NYLOCK FLG,M8-1.25,DIN6926,10,ZAB	2
27	237820GT	SCREW,HHF,M8X40,DIN6921,8.8,YZ	2
28	1279218GT	FORMING,LATCH TRIGGER EXTENSION,8K	1
29	215254GT	LATCH,ROTARY,ENGINE COVER	1
30	1260061GT	HANDLE,LHANDLE,LATCH,GOLDENROD	1
31	57072GT	SCREW,BHHS,3/8-16 X 1.25	4
32	60875GT	TRIM MOLDING Please specify length required when ordering	1
33	1295834GT	PLATE,VENT,SIDE,SMALL	1

205.1 Fuel and Hydraulic Tank Assembly (to SN GTH10E-16264)

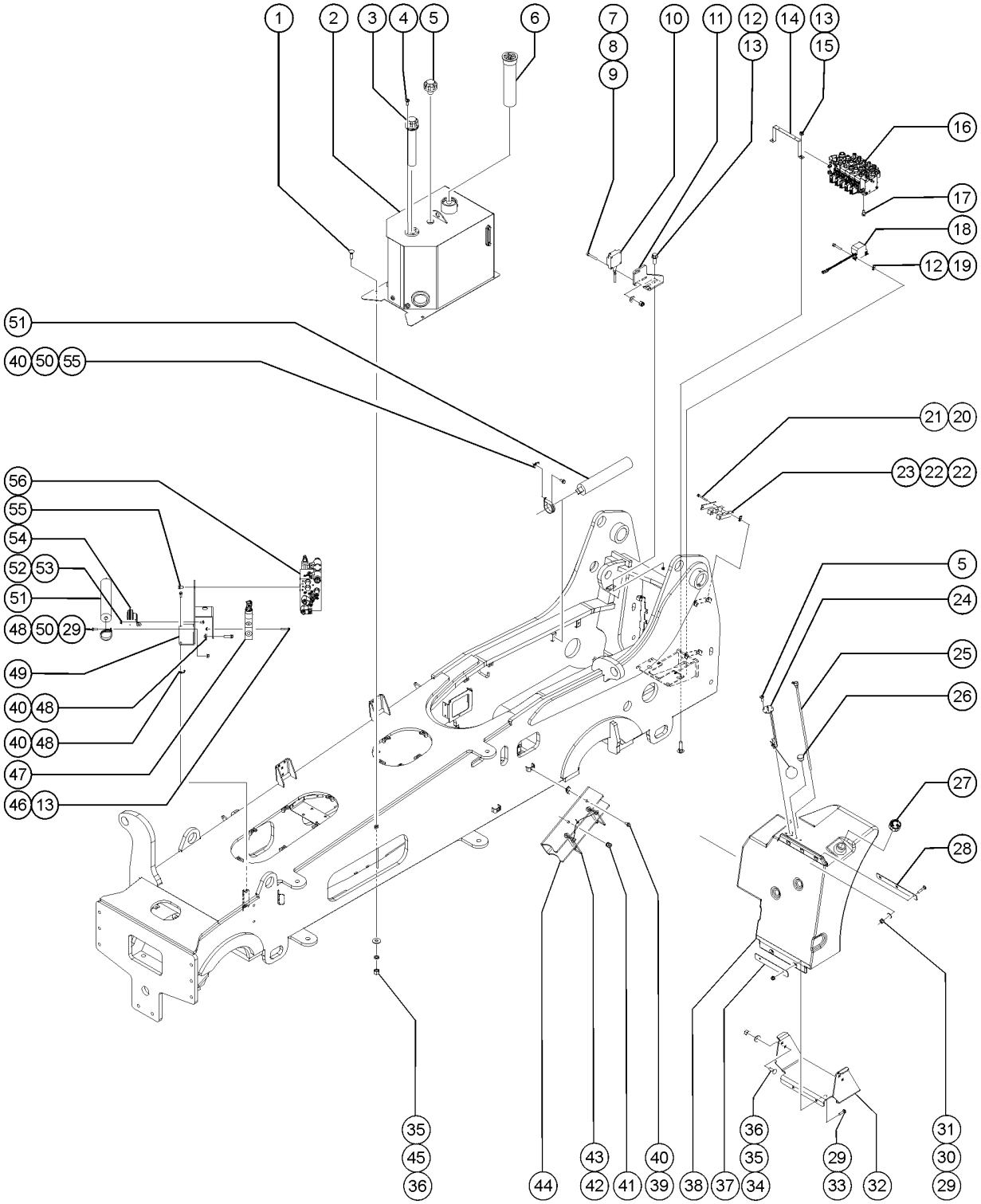

205.1 Fuel and Hydraulic Tank Assembly (to SN GTH10E-16264)

Item	Part No.	Description	Qty.
1	1256115GT	BOLT,CARRIAGE,1/2-13X1.75,5,ZAG	4
2	1290074GT	WELDMENT,TANK,HYD,ASSEMBLY,10K	1
2-	1295382GT	STRAINER,SUCTION,40GPM	1
3	1292366GT	FILLCAP,HYD,TANK,SEALED	1
4	1251757GT	SCREW,PHPM,10-32X.50,ZAG	11
5	1292365GT	BREATHER,HYD,TANK,3PSI	1
6	117379GT	ELEMENT,HYDRAULIC FILTER	1
7	1299693GT	SCREW,SHC,M4-0.7X30 DIN912,12.9,ZAB	3
8	1257390GT	WASHER,FLAT,#8,SAE,ZAG	3
9	1283019GT	NUT,NYLOCK,M4-0.7,DIN985,8,ZAB	3
10	1301308GT	HARNESS,BOOM ANGLE SW	1
11	1294812GT	FORMING,BRKT,BOOM ANGLE SW	1
12	824078GT	SCREW,HHF,1/4-20X.75,8,ZAG	6
13	1277924GT	NUT,NYLOCK FLG,1/4-20,F,ZAG	6
14	1284345GT	FORMING,HARNESS SUPPORT	1
15	1256127GT	BOLT,CARRIAGE,1/4-20X1",GR 5,ZAG	2
16	1302669GT	PVG,5 SECTION,PRIMARY,GTH1056	1
16-	1303159GT	SLICE ASSEMBLY,-32PVG	
16-	1303160GT	SLICE ASSEMBLY, -32PVG,RELIEF	
16-	1303161GT	SLICE ASSEMBLY,-32PVG,LOADHOLD	
16-	1285612GT	SLICE ASSEMBLY,AUX	
16-	1285620GT	OUTLET,PVG	
16-	1285619GT	INLET,PRIORITY,PVG	
16-	1285621GT	KIT,SEALS AND STUDS	
17	1255887GT	SCREW,HHC,5/16-18X.5,8,ZAG	2
18	219457GT	HARNESS, BACKUP ALARM	1
19	56912GT	SPRING CLIP,1/4-20,.025-.15X.54,ZAG	4
20	824088GT	SCREW,HHF,5/16-18X3,8,ZAG	2

205.1 Fuel and Hydraulic Tank Assembly (to SN GTH10E-16264)

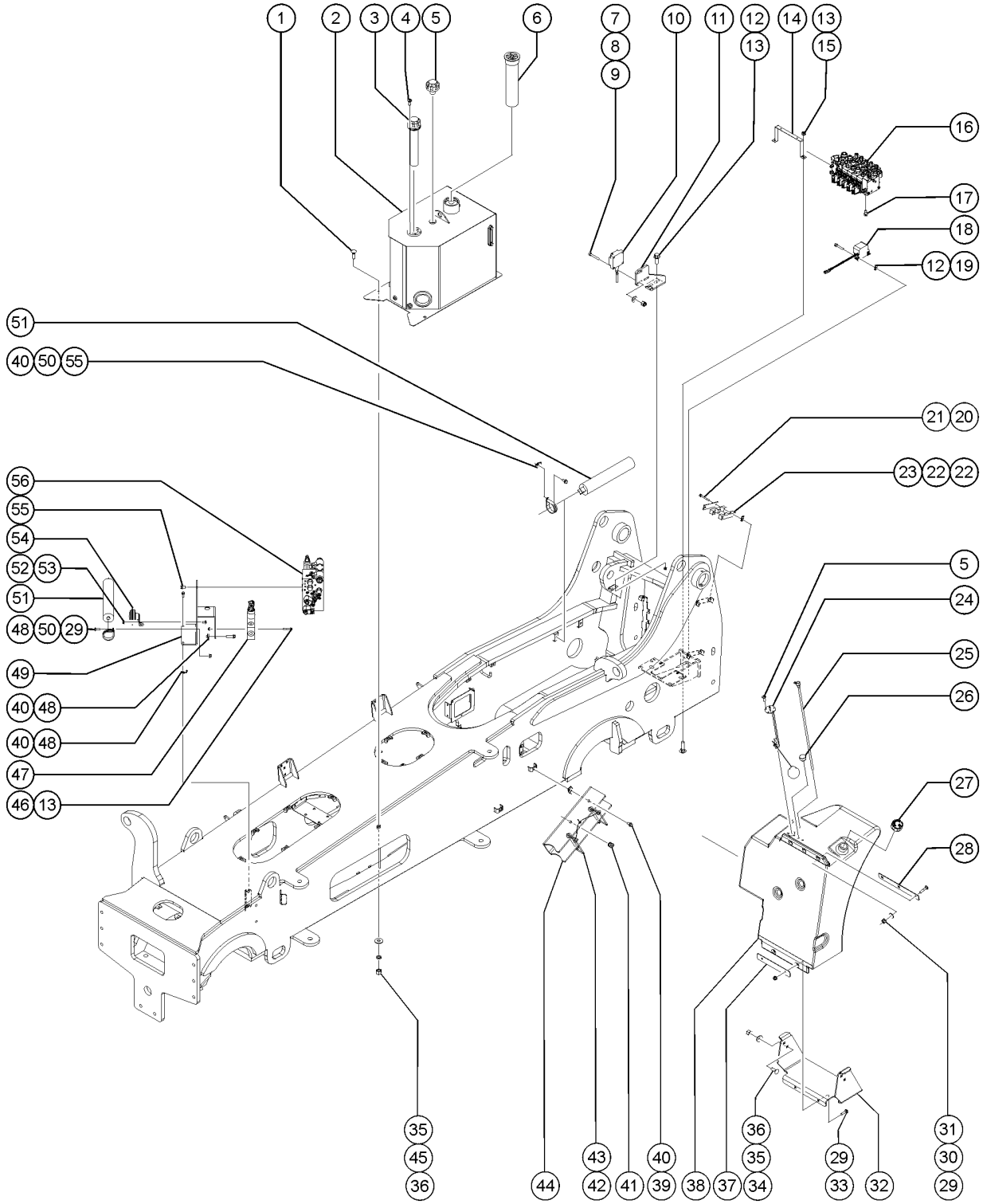

205.1 Fuel and Hydraulic Tank Assembly (to SN GTH10E-16264)

Item	Part No.	Description	Qty.
21	36456GT	SPRING CLIP,5/16-18,.025-.15X.	2
22	1297806GT	CLAMP,HOSE,BOOM,GTH	2
23	1295228GT	PLATE,CLAMP,MOUNT,EXT	1
24	123151GT	KIT, FUEL SENDER	1
25	1292645GT	ASSY,DOWNTUBE,CAB,FUELTANK	2
26	78546GT	BREATHER CAP, HYD. TANK, 1/4 NPT	1
27	233651GT	FUEL CAP, DIESEL, VENTLESS	1
28	1292642GT	PLATE,WASHER,FUELTANK,TOP	1
29	1274322GT	NUT,NYLOCK FLG,3/8-16,F,ZAG	7
30	1255758GT	WASHER,FLAT,3/8,USS,ZAG	3
31	1258623GT	BOLT,CARRIAGE,3/8-16X2.0,5,ZAG	3
32	1292544GT	FORMING,CAB,FUEL,TANK,SUPPORT	1
33	1256756GT	BOLT,CARRIAGE,3/8-16X1.5,5,ZAG	2
34	1256179GT	BOLT,CARRIAGE,1/2-13X1.5,5,ZAG	4
35	1255760GT	WASHER,FLAT,1/2,USS,ZAG	8
36	1274320GT	NUT,NYLOCK,1/2-13,C,ZAG	8
37	1292643GT	PLATE,WASHER,FUELTANK,BOTTOM	1
38	1302351GT	ASSY,FUEL,TANK,30GAL,1056	1
38-	1291276GT	TANK,FUEL,PLASTIC,35GAL,10K	1
38-	1296278GT	PLUG,DRAIN,9/16-18,SS,M7HEX	1
39	824091GT	SCREW, HHF, 3/8-16 X 1.25, 8, ZAG	2
40	29868GT	SPRING CLIP,3/8-16,.05-.20X.73,ZAG	6
41	1284530GT	9/16" RUBBER GROMMET	4
42	1284521GT	HITCH PIN ASSEMBLY,1/2" X 5-3/4"	1
43	19843GT	RIVET,ALUM,ALUM,P,.188 X .50	1
44	1297335GT	FORMING,CHOCK,GTH1056E	1
45	824111GT	WASHER,LOCK,1/2,ZAG	4
46	824082GT	SCREW, HHF, 1/4-20 X 1.75, 8, ZAG	2

205.1 Fuel and Hydraulic Tank Assembly (to SN GTH10E-16264)

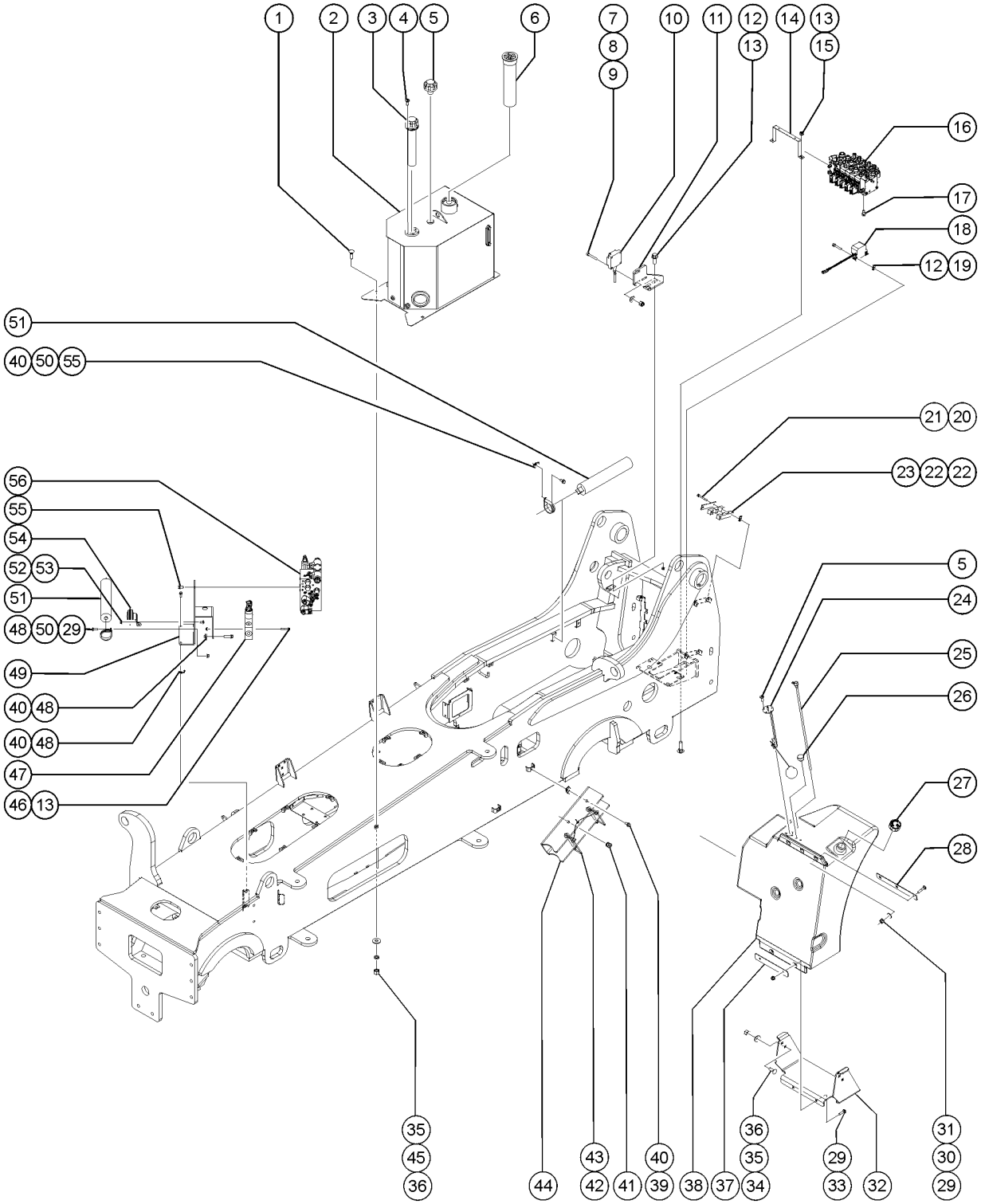

205.1 Fuel and Hydraulic Tank Assembly (to SN GTH10E-16264)

Item	*Part No.*	*Description*	*Qty.*
47		REF. MANIFOLD,BRAKE PRESSURE (Refer to 805.1)	1
48	824067GT	SCREW, HHC, 3/8-16 X 1, 8, ZAG	6
49	1292061GT	WELDMENT,SECONDARY,COMBO,BRACKET	1
50	87188GT	CLAMP,2.38,#38 X 3/8 RUB CUSH	4
51	117666GT	ACCUMULATOR,29CC,400PSI	2
52	1274167GT	NUT,NYLOCK FLG,5/16-18,F,ZAG	1
53	1257745GT	BOLT,CARRIAGE,5/16-18X.75,5,ZA	1
54	81578GT	HORN,12VDC,SPADE TERMINALS***	1
55	824089GT	SCREW, HHF, 3/8-16 X .75, 8, ZAG	5
56		REF. MANIFOLD,SECONDARY,STABILIZER,1056 (Refer to 804.1)	1

205.2 Fuel and Hydraulic Tank Assembly (from SN GTH10E-16265)

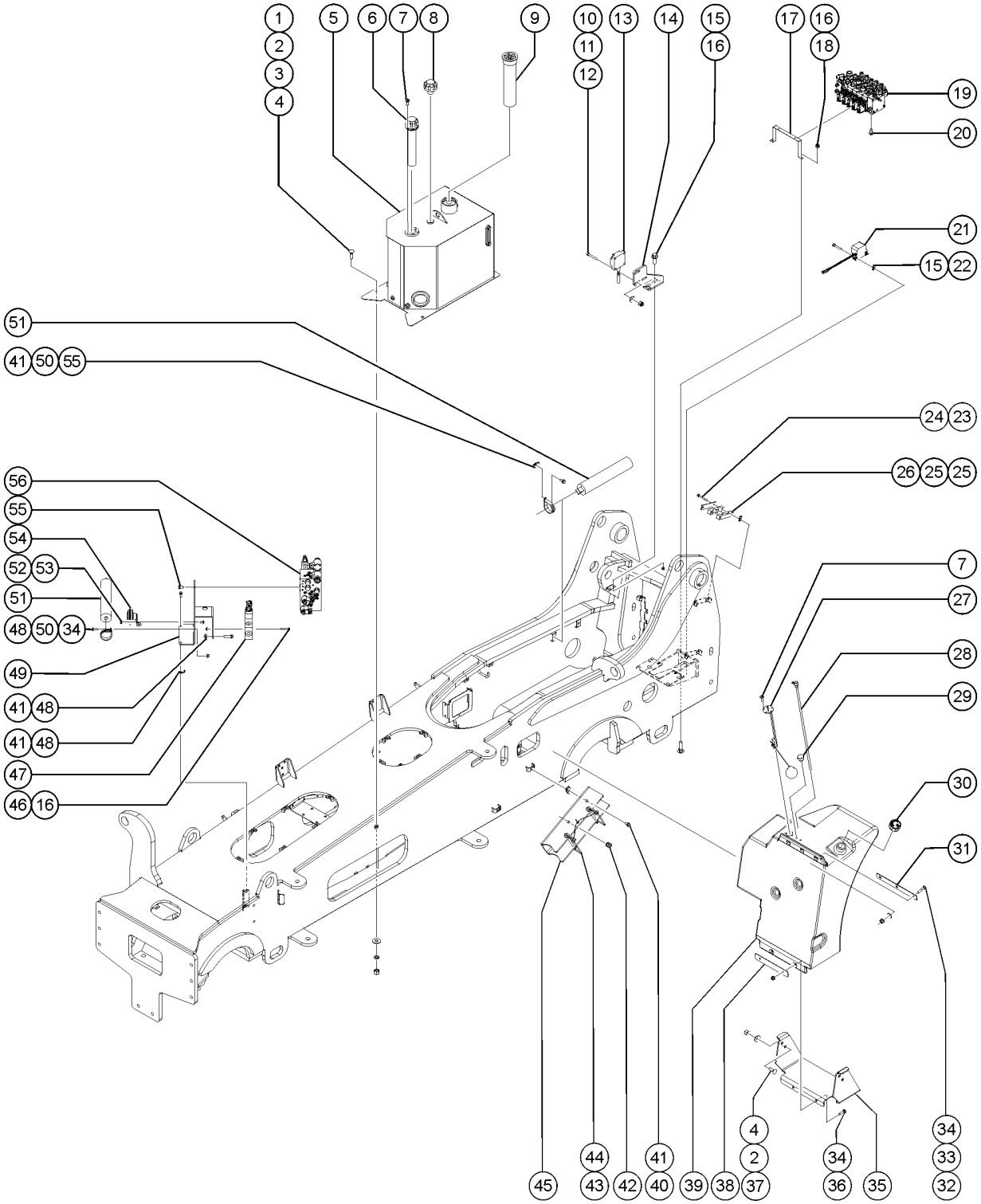

205.2 Fuel and Hydraulic Tank Assembly (from SN GTH10E-16265)

Item	Part No.	Description	Qty.
1	1256115GT	BOLT,CARRIAGE,1/2-13X1.75,5,ZAG	4
2	1255760GT	WASHER,FLAT,1/2,USS,ZAG	8
3	824111GT	WASHER,LOCK,1/2,ZAG	4
4	1274320GT	NUT,NYLOCK,1/2-13,C,ZAG	8
5	1290074GT	WELDMENT,TANK,HYD,ASSEMBLY,10K	1
6	1292366GT	FILLCAP,HYD,TANK,SEALED	1
7	1251757GT	SCREW,PHPM,10-32X.50,ZAG	11
8	1292365GT	BREATHER,HYD,TANK,3PSI	1
9	117379GT	ELEMENT,HYDRAULIC FILTER	1
10	1299693GT	SCREW,SHC,M4-0.7X30 DIN912,12.9,ZAB	3
11	1257390GT	WASHER,FLAT,#8,SAE,ZAG	3
12	1283019GT	NUT,NYLOCK,M4-0.7,DIN985,8,ZAB	3
13	1301308GT	HARNESS,BOOM ANGLE SW	1
14	1294812GT	FORMING,BRKT,BOOM ANGLE SW	1
15	824078GT	SCREW,HHF,1/4-20X.75,8,ZAG	6
16	1277924GT	NUT,NYLOCK FLG,1/4-20,F,ZAG	6
17	1284345GT	FORMING,HARNESS SUPPORT	1
18	1256127GT	BOLT,CARRIAGE,1/4-20X1",GR 5,ZAG	2
19	1302669GT	PVG,5 SECTION,PRIMARY,GTH1056	1
19-	1303159GT	SLICE ASSEMBLY,-32PVG	
19-	1303160GT	SLICE ASSEMBLY, -32PVG,RELIEF	
19-	1303161GT	SLICE ASSEMBLY,-32PVG,LOADHOLD	
19-	1285612GT	SLICE ASSEMBLY,AUX	
19-	1285620GT	OUTLET,PVG	
19-	1285619GT	INLET,PRIORITY,PVG	
19-	1285621GT	KIT,SEALS AND STUDS	
20	1255887GT	SCREW,HHC,5/16-18X.5,8,ZAG	2
21	219457GT	HARNESS, BACKUP ALARM (option) use until exhausted, replaced by 1313956GT	1

205.2 Fuel and Hydraulic Tank Assembly (from SN GTH10E-16265)

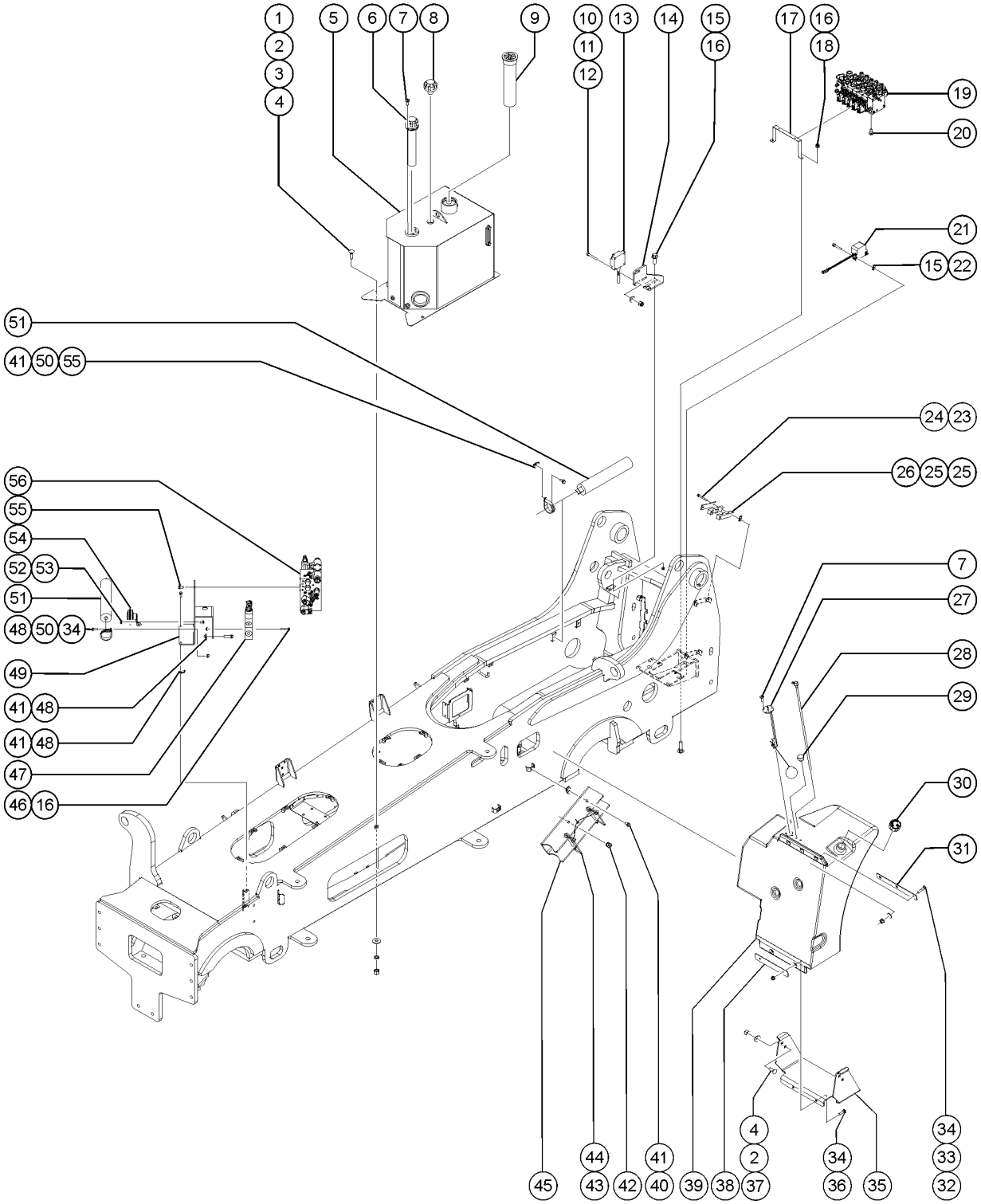

205.2 Fuel and Hydraulic Tank Assembly (from SN GTH10E-16265)

Item	Part No.	Description	Qty.
21B	1313956GT	ALARM, WHITE NOISE, 97DB option	1
22	56912GT	SPRING CLIP,1/4-20,.025-.15X.54,ZAG	4
23	824088GT	SCREW,HHF,5/16-18X3,8,ZAG	2
24	36456GT	SPRING CLIP,5/16-18,.025-.15X.	2
25	1297806GT	CLAMP,HOSE,BOOM,GTH	2
26	1295228GT	PLATE,CLAMP,MOUNT,EXT	1
27	123151GT	KIT, FUEL SENDER	1
28	1292645GT	ASSY,DOWNTUBE,CAB,FUELTANK	2
29	78546GT	BREATHER CAP, HYD. TANK, 1/4 NPT	1
30	233651GT	FUEL CAP, DIESEL, VENTLESS	1
31	1292642GT	PLATE,WASHER,FUELTANK,TOP	1
32	1258623GT	BOLT,CARRIAGE,3/8-16X2.0,5,ZAG	3
33	1255758GT	WASHER,FLAT,3/8,USS,ZAG	3
34	1274322GT	NUT,NYLOCK FLG,3/8-16,F,ZAG	7
35	1292544GT	FORMING,CAB,FUEL,TANK,SUPPORT	1
36	1256756GT	BOLT,CARRIAGE,3/8-16X1.5,5,ZAG	2
37	1256179GT	BOLT,CARRIAGE,1/2-13X1.5,5,ZAG	4
38	1292643GT	PLATE,WASHER,FUELTANK,BOTTOM	1
39	1302351GT	ASSY,FUEL,TANK,30GAL,1056	1
39-	1291276GT	TANK,FUEL,PLASTIC,35GAL,10K	1
39-	1296278GT	PLUG,DRAIN,9/16-18,SS,M7HEX	1
40	824091GT	SCREW, HHF, 3/8-16 X 1.25, 8, ZAG	2
41	29868GT	SPRING CLIP,3/8-16,.05-.20X.73,ZAG	6
42	1284530GT	9/16" RUBBER GROMMET	4
43	1284521GT	HITCH PIN ASSEMBLY,1/2" X 5-3/4"	1
44	19843GT	RIVET,ALUM,ALUM,P,.188 X .50	1
45	1297335GT	FORMING,CHOCK,GTH1056E	1
46	824082GT	SCREW, HHF, 1/4-20 X 1.75, 8, ZAG	2

205.2 Fuel and Hydraulic Tank Assembly (from SN GTH10E-16265)

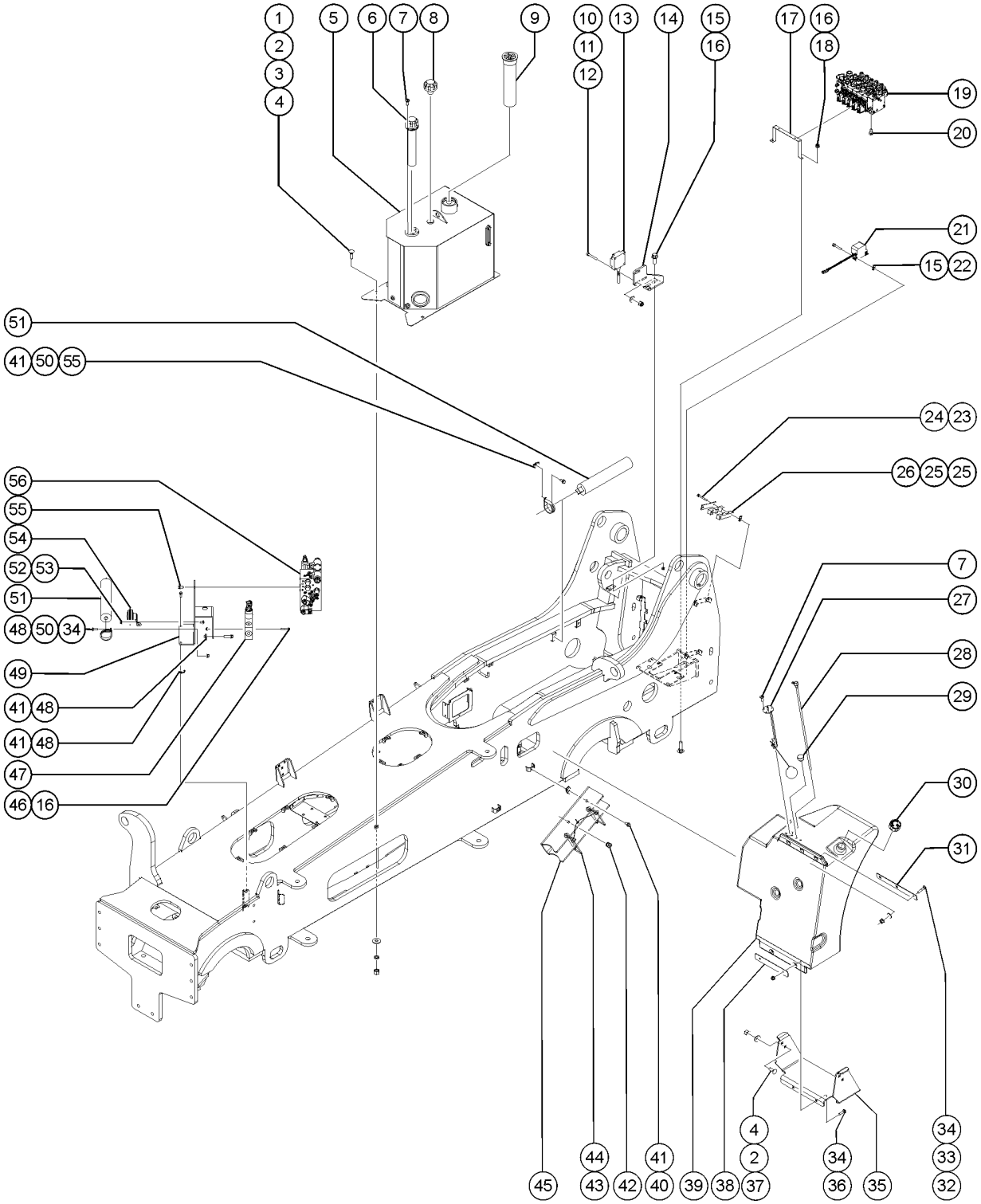

205.2 Fuel and Hydraulic Tank Assembly (from SN GTH10E-16265)

Item	*Part No.*	*Description*	*Qty.*
47		REF. MANIFOLD,BRAKE PRESSURE (Refer to 805.1)	1
48	824067GT	SCREW, HHC, 3/8-16 X 1, 8, ZAG	6
49	1292061GT	WELDMENT,SECONDARY,COMBO,BRACKET	1
50	87188GT	CLAMP,2.38,#38 X 3/8 RUB CUSH	4
51	117666GT	ACCUMULATOR,29CC,400PSI	2
52	1274167GT	NUT,NYLOCK FLG,5/16-18,F,ZAG	1
53	1257745GT	BOLT,CARRIAGE,5/16-18X.75,5,ZA	1
54	81578GT	HORN,12VDC,SPADE TERMINALS***	1
55	824089GT	SCREW, HHF, 3/8-16 X .75, 8, ZAG	5
56		REF. MANIFOLD,SECONDARY,STABILIZER,1056 (Refer to 804.1)	1

206.1 Drive Shaft Linkage (to SN GTH10E-16264)

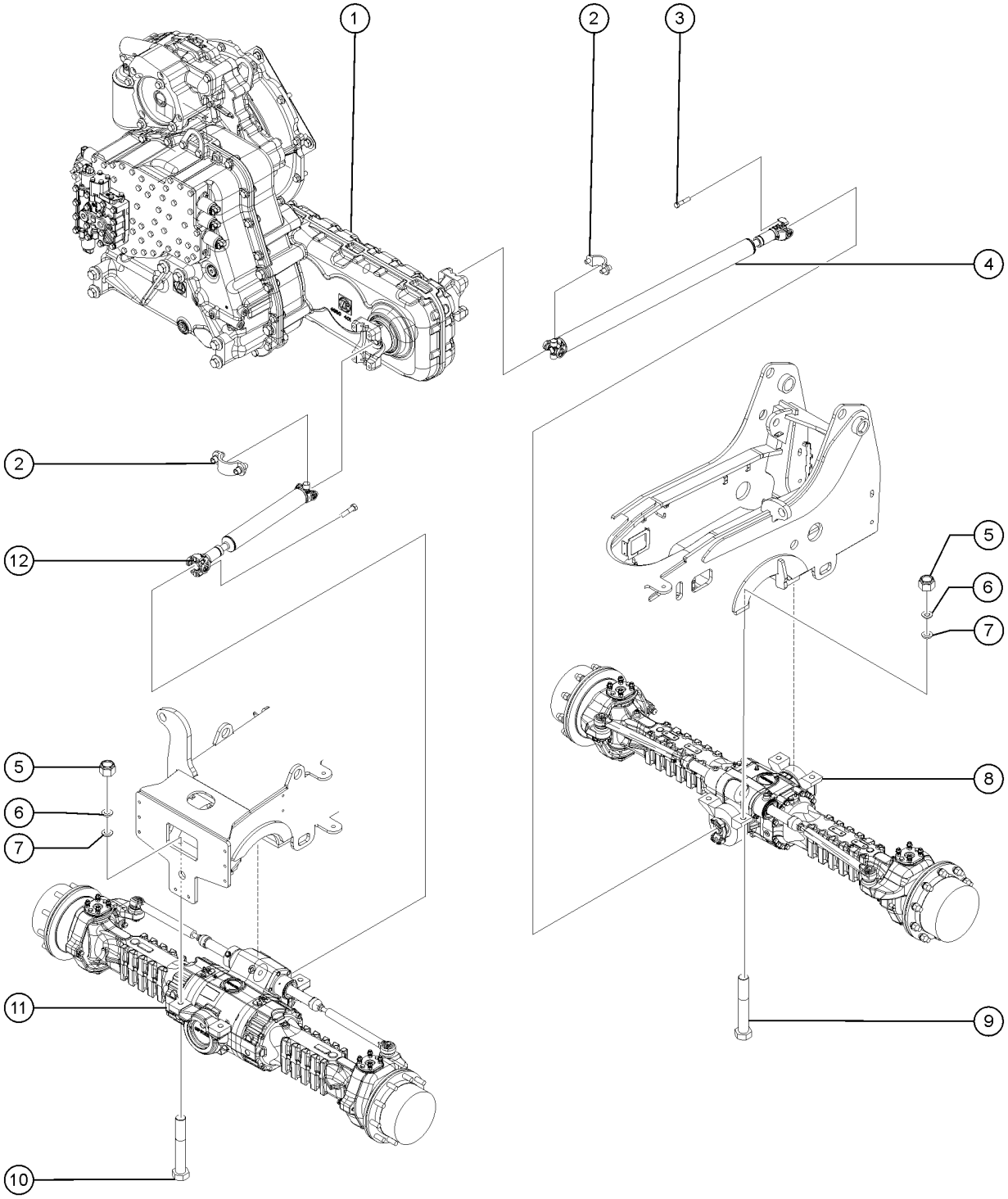

206.1 Drive Shaft Linkage (to SN GTH10E-16264)

Item	Part No.	Description	Qty.
1	1289115GT	TRANSMISSION,ZF,4WG98 TSC,4/3 SPD Deutz T3 Engine and Deutz T4F Engine	1
1B	1290275GT	TRANSMISSION, CVT, ECOMEC 150 LD Deutz 74HP T4F Engine	1
1C	1264653GT	ASSY, TRANSMISSION ,DANA VDT 1104TC DEUTZ FP, 844 Deutz 74HP T4F, DANA Engine	1
2	123577GT	STRAP KIT,DRIVESHAFT,1480 Deutz T3 Engine and Deutz T4F Engine	2
2B	123577GT	STRAP KIT,DRIVESHAFT,1480 Deutz 74HP T4F Engine and Deutz 74HP T4F, DANA Engine	4
3	1258417GT	SCREW,HHC,3/8-24X1.75,8,ZAG	8
4	1291591GT	DRIVESHAFT,REAR,ZF,GTH-1056 Deutz T3 Engine and Deutz T4F Engine, Includes 2 and 3	1
4-	123577GT	STRAP KIT,DRIVESHAFT,1480 from SN GTH10E-16001	1
4B	1291593GT	DRIVESHAFT,REAR,CVT (Deutz 74HP T4F Engine and Deutz 74HP T4F, DANA Engine), Includes 2B,(to SN GTH10E -16264)	1
4B-	123577GT	STRAP KIT,DRIVESHAFT,1480	2
5	77051GT	NUT,NYLOCK,3/4-10,GRD.8 replaced by 1313530GT	4
5B	1283024GT	NUT,NYLOCK,1-8,8,ZAG Deutz T3 Engine, (replaced by 1313530GT)	4
5C	1313530GT	NUT,NYLOCK,M24-3.0,DIN985,8,ZAB	8
6	1313531GT	WASHER,FLAT,M24,DIN125,ZAB	8
7	1264259GT	WASHER,LOCK,1.0,ZAG	8
8	1291492GT	AXLE, DANA, 212HY, REAR,45DEG,LSD,26.25 Deutz 74HP T4F Engine and Deutz 74HP T4F, DANA Engine ,(to SN GTH10E -16264)	1
8-	1307613GT	DIFFERENTIAL DISC KIT	2
8-	1307614GT	DIFFERENTIAL SIDE GEAR	2
8-	1307615GT	DIFFERENTIAL PINION	4
8-	1307616GT	DIFFERENTIAL CARRIER	1
8-	1307618GT	LIMITED SLIP DIFFERENTIAL	1
8-	1307619GT	AXLE CASE	2
8-	1307620GT	BOLT	32
8-	1307622GT	ROLLER BEARING	4
8-	1307625GT	JOINT CROSS	2
8-	1307626GT	JOINT CENTER SECTION	1
8-	1307627GT	ADJUSTING BOLT	6
8-	1307722GT	BEVEL GEAR SET	1

206.1 Drive Shaft Linkage (to SN GTH10E-16264)

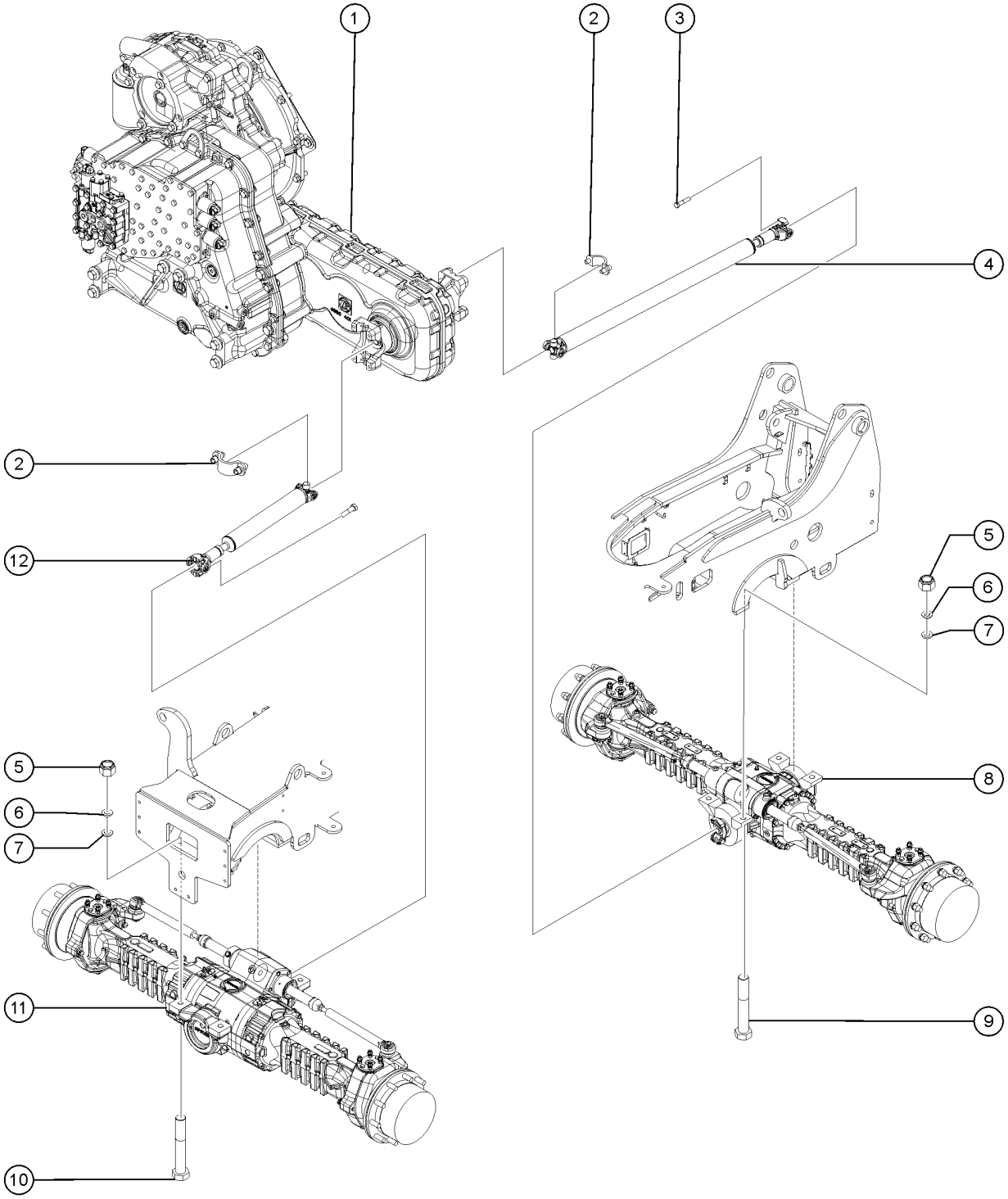

206.1 Drive Shaft Linkage (to SN GTH10E-16264)

Item	Part No.	Description	Qty.
8-	1307723GT	FLANGE	1
9	1256072GT	SCREW,HHF,3/4-10X6,8,ZAG replaced by 1313528GT	4
9B	1313528GT	SCREW,HHC,M24-3.0X180,DIN931,10.3,ZAB	4
10	1256466GT	SCREW,HHC,1-8X6.5,8,ZAG replaced by 1314387GT	4
10B	1314387GT	SCREW,HHC,M24-3.0X180,DIN931,10.9,ZAB	4
11	1291493GT	AXLE, DANA, 223, FRONT,45DEG,LSD,26.25 Deutz 74HP T4F Engine and Deutz 74HP T4F, DANA Engine,(to SN GTH10E -16264)	1
11-	1307585GT	VENT	1
11-	1307586GT	PLUG	3
11-	1307588GT	HOUSING	1
11-	1307589GT	CLUTCH DISC	2
11-	1307590GT	DIFFERENTIAL SIDE GEAR	2
11-	1307591GT	WASHER	4
11-	1307593GT	DIFFERENTIAL KIT	1
11-	1307594GT	BOLT	15
11-	1307595GT	SEAL	2
11-	1307599GT	SNAP RING	6
11-	1307600GT	DIFFERENTIAL PINION	6
11-	1307601GT	PLANET GEAR CARRIER	1
11-	1307602GT	PLANET GEAR CARRIER KIT	2
11-	1307603GT	JOINT CROSS	2
11-	1307604GT	JOINT CENTER SECTION	1
11-	1307605GT	PISTON	2
11-	1307720GT	BEVEL GEAR SET	1
11-	1307721GT	FLANGE	1
12	1291590GT	DRIVESHAFT,FRONT,ZF,GTH-1056 (Deutz T3 Engine and Deutz T4F Engine), Includes 2 and 3	1
12-	123577GT	STRAP KIT,DRIVESHAFT,1480 from SN GTH10E-16001	1
12B	1291592GT	DRIVESHAFT,FRONT,CVT (Deutz 74HP T4F Engine and Deutz 74HP T4F, DANA Engine), Includes 2B	1
12B-	123577GT	STRAP KIT,DRIVESHAFT,1480 from SN GTH10E-16001	2

206.2 Drive Shaft Linkage (from SN GTH10E-16265)

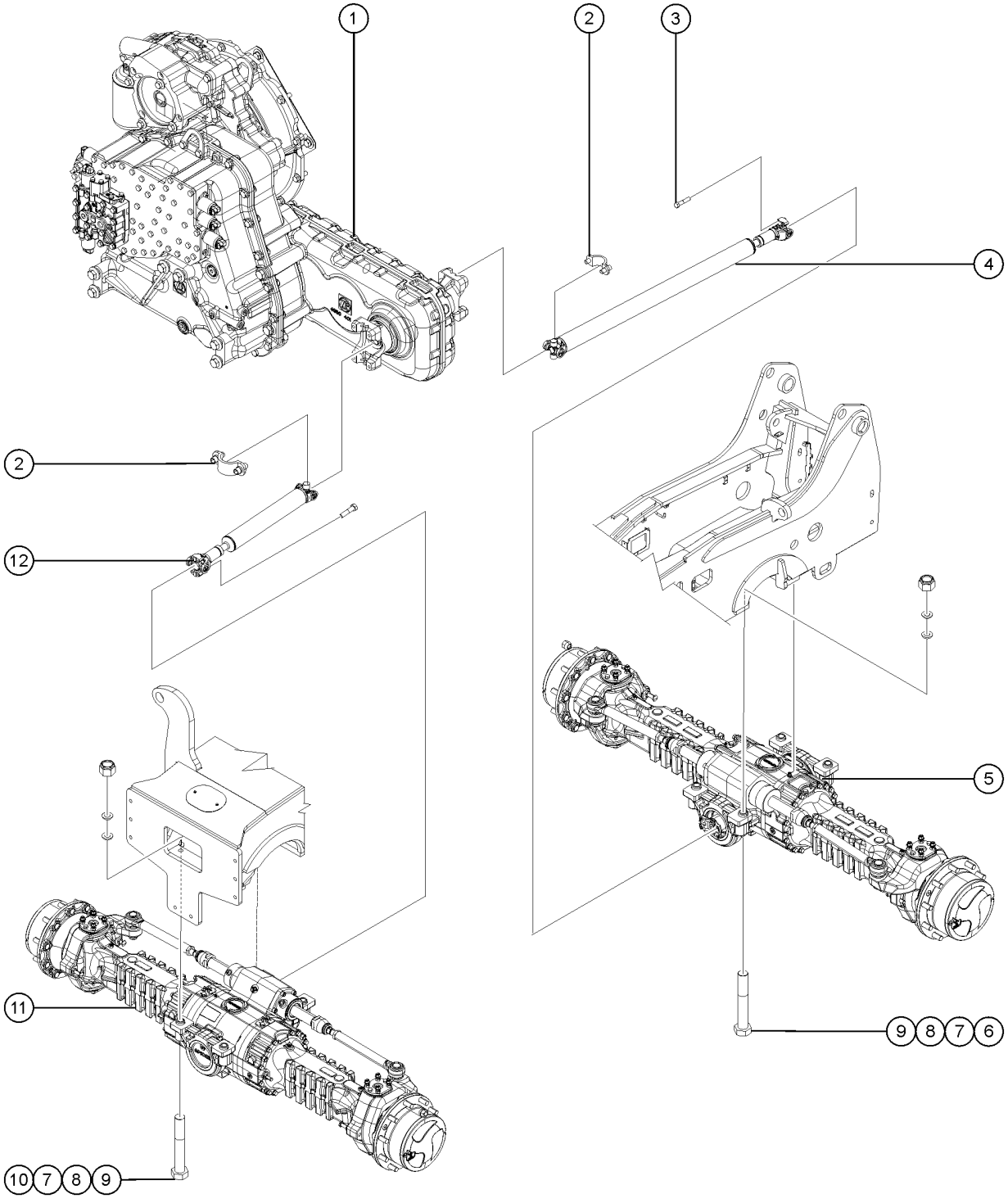

206.2 Drive Shaft Linkage (from SN GTH10E-16265)

Item	Part No.	Description	Qty.
1	1289115GT	TRANSMISSION,ZF,4WG98 TSC,4/3 SPD	1
1B	1290275GT	TRANSMISSION, CVT, ECOMEC 150 LD	1
1C	1264653GT	ASSY, TRANSMISSION ,DANA VDT 1104TC DEUTZ FP, 844	1
2	123577GT	STRAP KIT,DRIVESHAFT,1480	2
2B	123577GT	STRAP KIT,DRIVESHAFT,1480	4
3	1258417GT	SCREW,HHC,3/8-24X1.75,8,ZAG	8
4	1310730GT	DRIVESHAFT,REAR,ZF	1
4-	123577GT	STRAP KIT,DRIVESHAFT,1480	1
4B	1310719GT	DRIVESHAFT,REAR,CVT from SN GTH10E- 16265	1
4B-	123577GT	STRAP KIT,DRIVESHAFT,1480	2
5	1307067GT	AXLE,DANA,223,REAR,45DEG, STD. CYL, LSD, 20.66	1
5B	1306375GT	AXLE, DANA, 223, REAR, 45DEG, STD. CYL, LSD, 26.25 from SN GTH10E- 16265	1
6	1256072GT	SCREW,HHF,3/4-10X6,8,ZAG replaced by 1313528GT	4
6B	1313528GT	SCREW,HHC,M24-3.0X180,DIN931,10.3,ZAB	4
7	1313531GT	WASHER,FLAT,M24,DIN125,ZAB	8
8	1264259GT	WASHER,LOCK,1.0,ZAG	8
9	77051GT	NUT,NYLOCK,3/4-10,GRD.8 replaced by 1313530GT	4
9B	1283024GT	NUT,NYLOCK,1-8,8,ZAG replaced by 1313530GT	4
9C	1313530GT	NUT,NYLOCK,M24-3.0,DIN985,8,ZAB	8
10	1256466GT	SCREW,HHC,1-8X6.5,8,ZAG replaced by 1314387GT	4
10B	1314387GT	SCREW,HHC,M24-3.0X180,DIN931,10.9,ZAB	4
11	1307066GT	AXLE,DANA,223,FRONT,45DEG, STD. CYL, LSD, 20.66	1
11B	1306374GT	AXLE, DANA, 223, FRONT, 45DEG, STD. CYL, LSD, 26.25 from SN GTH10E- 16265	1
12	1291590GT	DRIVESHAFT,FRONT,ZF,GTH-1056	1
12-	123577GT	STRAP KIT,DRIVESHAFT,1480	1
12B	1291592GT	DRIVESHAFT,FRONT,CVT	1
12B-	123577GT	STRAP KIT,DRIVESHAFT,1480	2

207.1 Cover Assembly, View-1 (to SN GTH10E-16264)

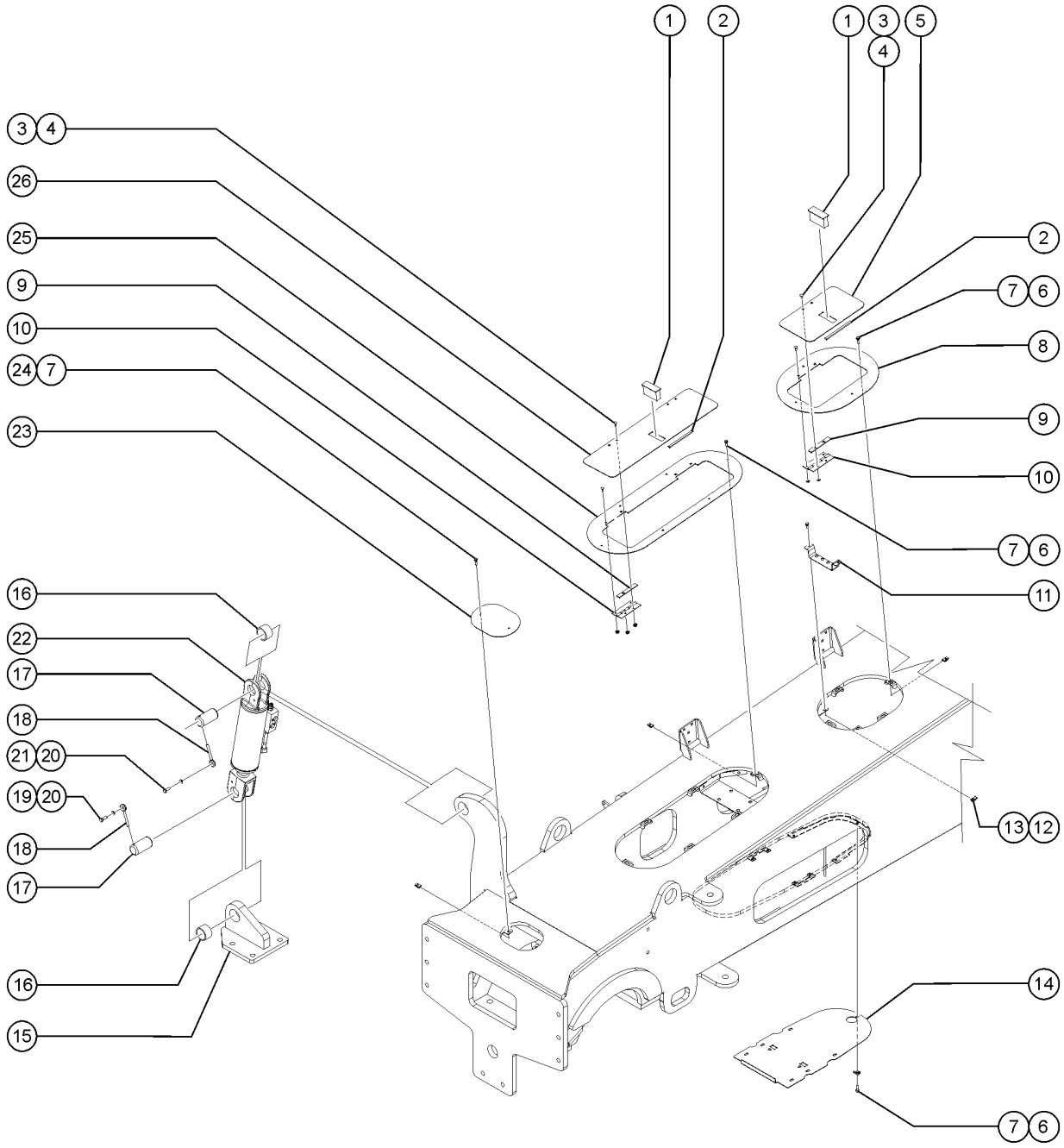

207.1 Cover Assembly, View-1 (to SN GTH10E-16264)

Item	Part No.	Description	Qty.
1	123286GT	LATCH,COMPRESSION,THIN GRIP	2
2	69773GT	SEAL,RIBBED FOAM,3/8X1/8 PSA**	2
3	1260963GT	BOLT,CARRIAGE,1/4-20X.63,5,ZAG	12
4	1256679GT	NUT,SERRATED,1/4-20,8,ZAG	12
5	1299690GT	PLATE,DOOR,SINGLEHINGE	1
6	824079GT	SCREW,HHF,1/4-20X1,8,ZAG	17
7	56912GT	SPRING CLIP,1/4-20,.025-.15X.54,ZAG	19
8	1292286GT	PLATE,COVER,CHASSIS,SMALL	1
9	1302462GT	SPACER,GTHXX	3
10	123556GT	HINGE,ACCESS COVER	3
11	1296425GT	FORMING,TEST,PORT,ACCESS	1
12	36456GT	SPRING CLIP,5/16-18,.025-.15X.	2
13	824085GT	SCREW, HHF, 5/16-18 X .75, 8, ZAG	2
14	1292331GT	FORMING,BOTTOM COVER,REAR,GTH1056	1
15		Ref. WELDMENT,LOWER CYL MOUNT Ref to 202.1	1
16	123188GT	BEARING,2.00IDX2.50ODX1.50L	2
17	117125GT	PIN,2.00DIAX4.00LG,1 HOLE	2
18	825019GT	ROD END, .375X3.69, ZAG	2
19	824068GT	SCREW, HHC, 3/8-16 X 1.25, 8, ZAG	1
20	824110GT	WASHER, LOCK, 3/8, ZAG	2
21	824067GT	SCREW, HHC, 3/8-16 X 1, 8, ZAG	1
22	1253248GT	CYLINDER,SWAY,1056	1
23	1292328GT	PLATE,COVER,CHASSIS,NOSE,GTH1056	1
24	824081GT	SCREW,HHF,1/4-20X1.5,8,ZAG	2
25	1298377GT	PLATE, COVER, CHASSIS, LARGE, GTH1056	1
26	1298378GT	PLATE,SECOND MANIF ACCESS DOOR	1

207.2 Cover Assembly, View-1 (from SN GTH10E-16265)

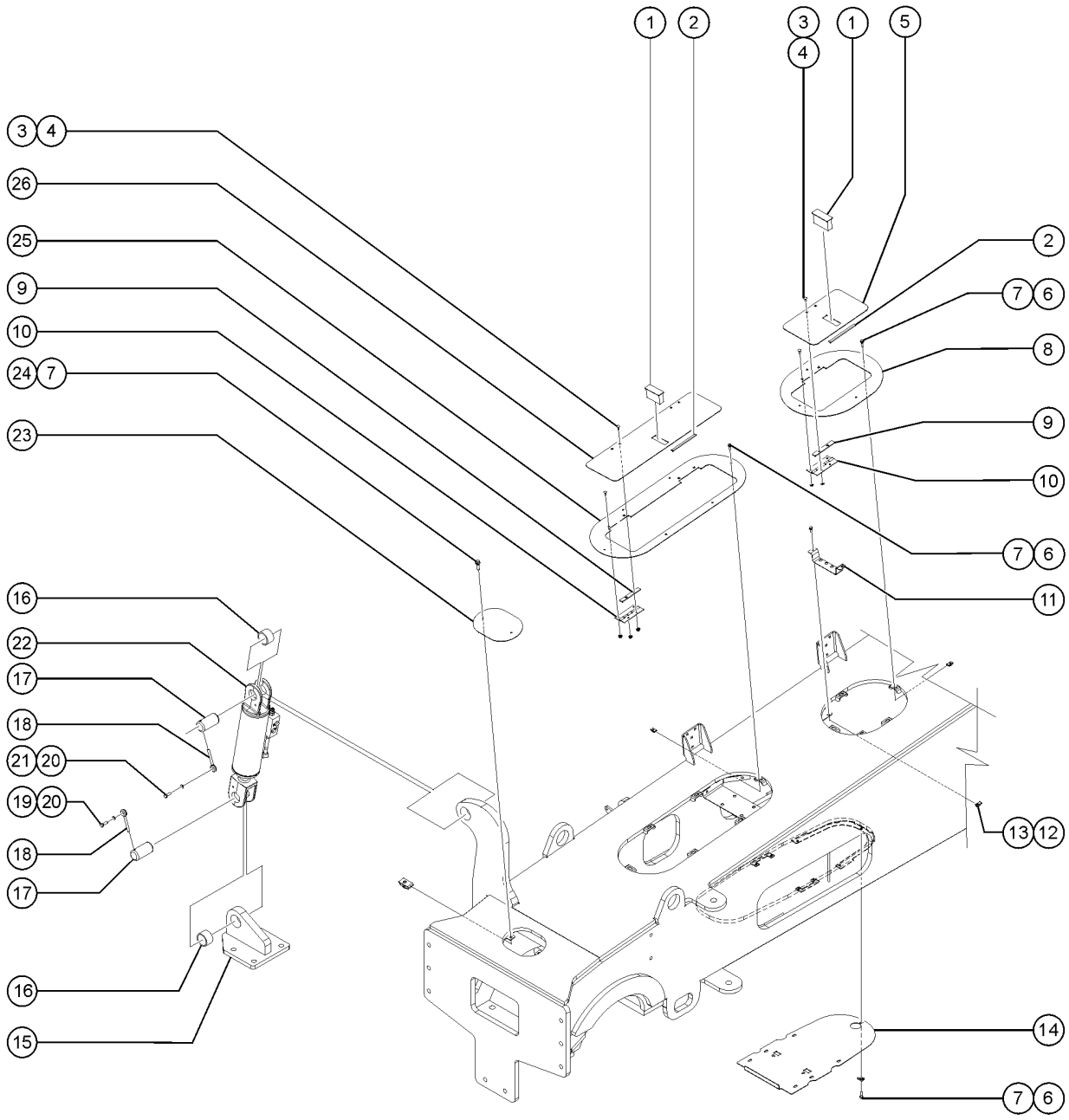

207.2 Cover Assembly, View-1 (from SN GTH10E-16265)

Item	Part No.	Description	Qty.
1	123286GT	LATCH,COMPRESSION,THIN GRIP	2
2	69773-600GT	SEAL,RIBBED FOAM,3/8X1/8 PSA	2
3	1260963GT	BOLT,CARRIAGE,1/4-20X.63,5,ZAG	12
4	1256679GT	NUT,SERRATED,1/4-20,8,ZAG	12
5	1299690GT	PLATE,DOOR,SINGLEHINGE	1
6	824079GT	SCREW,HHF,1/4-20X1,8,ZAG	17
7	56912GT	SPRING CLIP,1/4-20,.025-.15X.54,ZAG	19
8	1292286GT	PLATE,COVER,CHASSIS,SMALL	1
9	1302462GT	SPACER,GTHXX	3
10	123556GT	HINGE,ACCESS COVER	3
11	1296425GT	FORMING,TEST,PORT,ACCESS	1
12	36456GT	SPRING CLIP,5/16-18,.025-.15X.	2
13	824085GT	SCREW, HHF, 5/16-18 X .75, 8, ZAG	2
14	1292331GT	FORMING,BOTTOM COVER,REAR,GTH1056	1
15		Ref. WELDMENT,LOWER CYL MOUNT Ref to 202.2	1
16	123188GT	BEARING,2.00IDX2.50ODX1.50L	2
17	117125GT	PIN,2.00DIAX4.00LG,1 HOLE	2
18	825019GT	ROD END, .375X3.69, ZAG	2
19	824068GT	SCREW, HHC, 3/8-16 X 1.25, 8, ZAG	1
20	824110GT	WASHER, LOCK, 3/8, ZAG	2
21	824067GT	SCREW, HHC, 3/8-16 X 1, 8, ZAG	1
22	1253248GT	CYLINDER,SWAY,1056	1
23	1292328GT	PLATE,COVER,CHASSIS,NOSE,GTH1056	1
24	824081GT	SCREW,HHF,1/4-20X1.5,8,ZAG	2
25	1298377GT	PLATE, COVER, CHASSIS, LARGE, GTH1056	1
26	1298378GT	PLATE,SECOND MANIF ACCESS DOOR	1

208.1 Cover Assembly, View-2 (to SN GTH10E-16264)

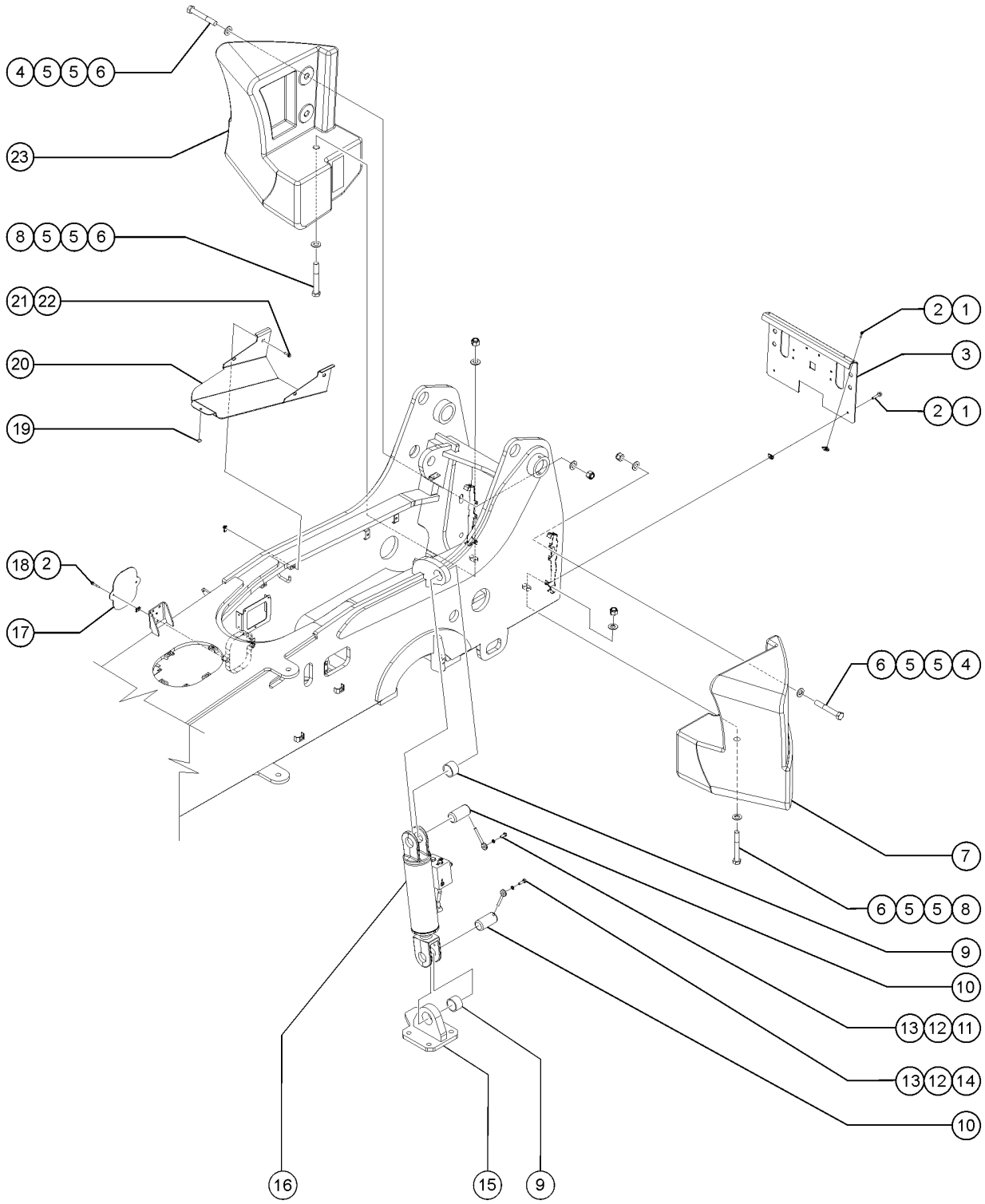

208.1 Cover Assembly, View-2 (to SN GTH10E-16264)

Item	Part No.	Description	Qty.
1	824079GT	SCREW,HHF,1/4-20X1,8,ZAG	4
2	56912GT	SPRING CLIP,1/4-20,.025-.15X.54,ZAG	6
3	1296930GT	FORMING,REAR CHASSIS COVER	1
4	1258563GT	SCREW,HHC,1-8X7,8,ZAG	4
5	824116GT	WASHER, FLAT, F436, 1.0, ZAG	12
6	123189GT	NUT,NYLOCK,1-8,GR8	6
7	1291405GT	CASTING,COUNTERWEIGHT,LH,GTH1056	1
8	1273404GT	SCREW,HHC,1-8X7.5,8,ZAG	2
9	123188GT	BEARING,2.00IDX2.50ODX1.50L	2
10	117125GT	PIN,2.00DIAX4.00LG,1 HOLE	2
11	824067GT	SCREW, HHC, 3/8-16 X 1, 8, ZAG	1
12	824110GT	WASHER, LOCK, 3/8, ZAG	2
13	825019GT	ROD END, .375X3.69, ZAG	2
14	824068GT	SCREW, HHC, 3/8-16 X 1.25, 8, ZAG	1
15	1291509GT	WELDMENT, MOUNT, LOCK CYL	1
16	1253249GT	CYLINDER,REAR LOCK,1056	1
17	233058GT	PLATE, CHASSIS SIDE COVER	1
18	824082GT	SCREW, HHF, 1/4-20 X 1.75, 8, ZAG	2
19	47478GT	BUMPER, RUBBER, 1"OD X .461H	1
20	1294403GT	FORMING,COVER,MID CHASSIS	1
21	824087GT	SCREW, HHF, 5/16-18 X 1.25, 8, ZAG	4
22	36456GT	SPRING CLIP,5/16-18,.025-.15X.	4
23	1291406GT	CASTING,COUNTERWEIGHT,RH,GTH1056	1

208.2 Cover Assembly, View-2 (from SN GTH10E-16265)

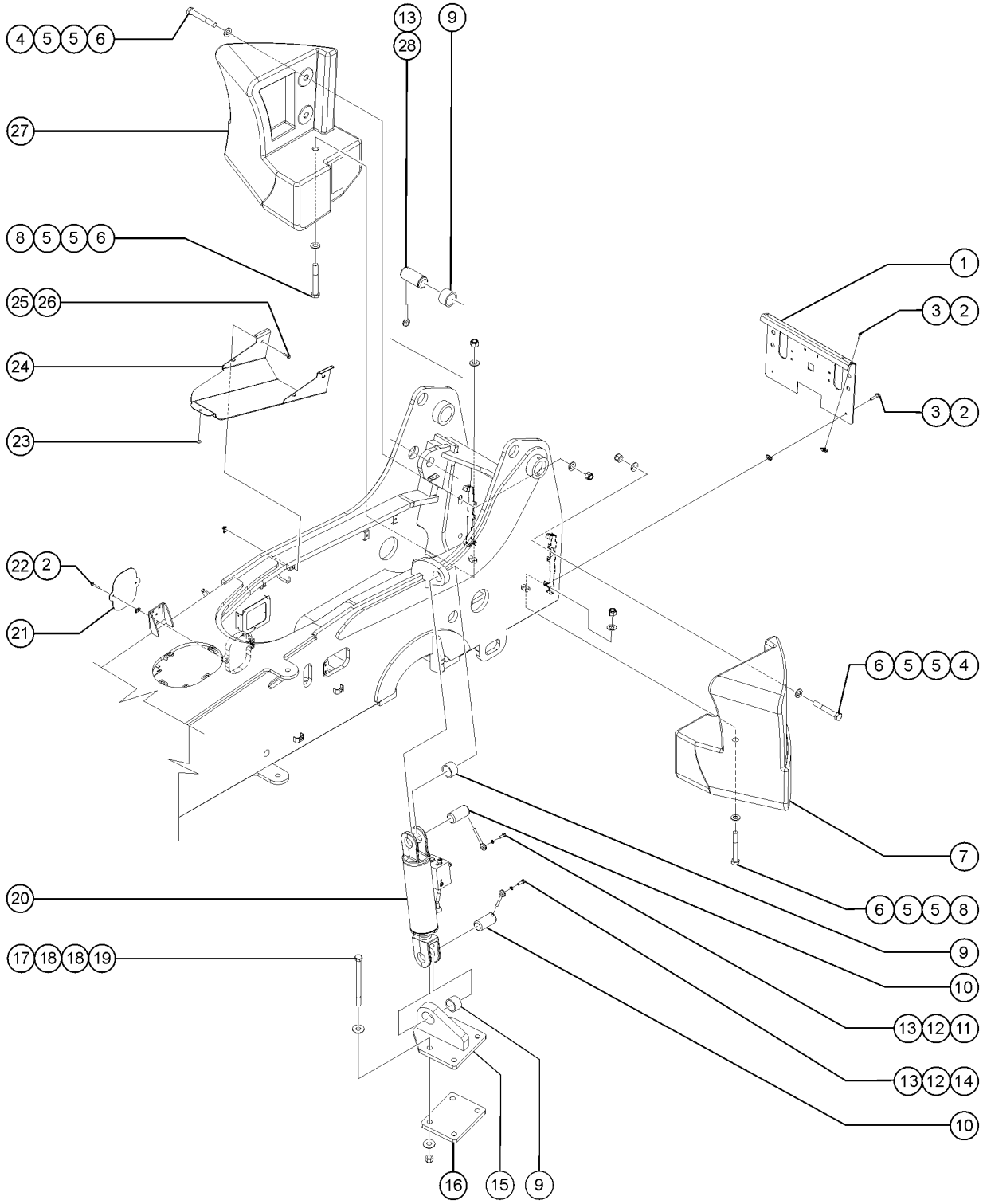

208.2 Cover Assembly, View-2 (from SN GTH10E-16265)

Item	Part No.	Description	Qty.
1	1296930GT	FORMING,REAR CHASSIS COVER	1
2	824079GT	SCREW,HHF,1/4-20X1,8,ZAG	4
3	56912GT	SPRING CLIP,1/4-20,.025-.15X.54,ZAG	6
4	1258563GT	SCREW,HHC,1-8X7,8,ZAG	4
5	824116GT	WASHER, FLAT, F436, 1.0, ZAG	12
6	123189GT	NUT,NYLOCK,1-8,GR8	6
7	1291405GT	CASTING,COUNTERWEIGHT,LH,GTH1056	1
8	1273404GT	SCREW,HHC,1-8X7.5,8,ZAG	2
9	123188GT	BEARING,2.00IDX2.50ODX1.50L	3
10	117125GT	PIN,2.00DIAX4.00LG,1 HOLE	2
11	824067GT	SCREW, HHC, 3/8-16 X 1, 8, ZAG	1
12	824110GT	WASHER, LOCK, 3/8, ZAG	2
13	825019GT	ROD END, .375X3.69, ZAG	2
14	824068GT	SCREW, HHC, 3/8-16 X 1.25, 8, ZAG	1
15	1291512GT	WELDMENT,LOWER CYL MOUNT	1
16	1253929GT	PLATE,CYLINDER MOUNTING	1
17	1257908GT	SCREW,HHC,3/4-10X11,8,ZAG	8
18	1255761GT	WASHER,FLAT,3/4,USS,HRD,ZAG	16
19	77051GT	NUT,NYLOCK,3/4-10,GRD.8	8
20	1253249GT	CYLINDER,REAR LOCK,1056	1
21	233058GT	PLATE, CHASSIS SIDE COVER	1
22	824082GT	SCREW, HHF, 1/4-20 X 1.75, 8, ZAG	2
23	47478GT	BUMPER, RUBBER, 1"OD X .461H	1
24	1294403GT	FORMING,COVER,MID CHASSIS	1
25	824087GT	SCREW, HHF, 5/16-18 X 1.25, 8, ZAG	4
26	36456GT	SPRING CLIP,5/16-18,.025-.15X.	4
27	1291406GT	CASTING,COUNTERWEIGHT,RH,GTH1056	1
28	1292927GT	PIN,2.00DIAX4.40LG,1HOLE	1

209.1 Battery Cables (to SN GTH10E-16264)

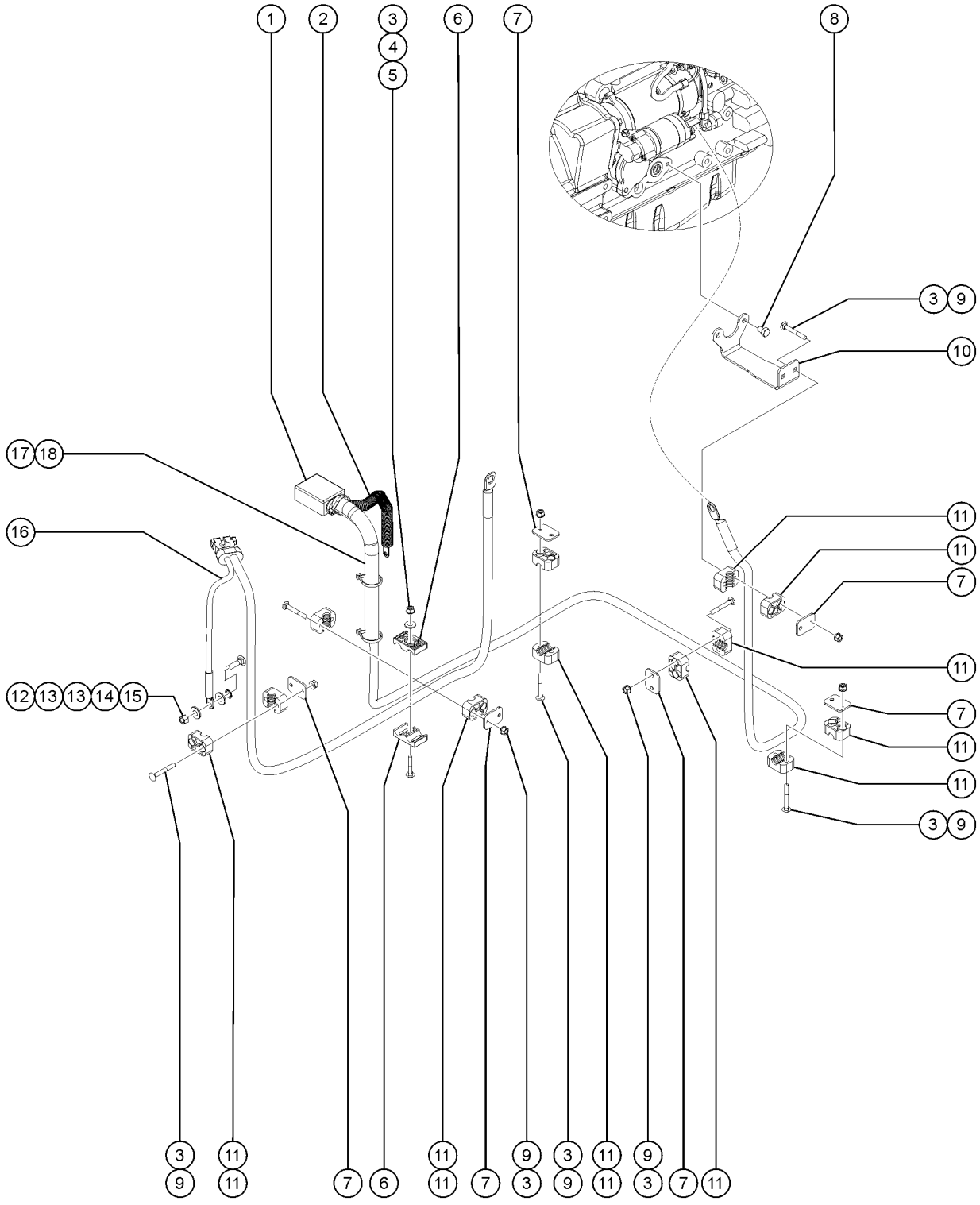

209.1 Battery Cables (to SN GTH10E-16264)

Item	Part No.	Description	Qty.
1	1262327GT	CABLE, BATTERY RED 2/0	1
2	1304900GT	WIRE LOOM, 5/8 DIA, NON SLIT, HI TEMP	12 inches
3	824027GT	NUT, TL FLG, 1/4-20, G, ZAG	15
4	824113GT	WASHER,FLAT,USS,1/4,ZAG	1
5	1255756GT	BOLT,CARRIAGE,1/4-20X1.5,5,ZAG	1
6	78736GT	CLAMP,2 HOSE,PLASTIC,5/8	2
7	117312GT	CLAMP CVR PLATE,SINGLE,GRP 2	6
8	1257704GT	SCREW,HHC,M8-1.25X12,DIN933,10.9,ZAB	2
9	1255797GT	BOLT,CARRIAGE,1/4-20X2,5,ZAG	12
10	1291436GT	FORMING,BAT CABLE MNT,10K DTZ	1
11	1254460GT	CLAMP HALVES,SINGLE,1/4" PIPE	12
12	1274321GT	NUT,NYLOCK,5/16-18,C,ZAG	1
13	5397GT	WASHER, FLAT, USS, 5/16-18	2
14	825005GT	PUSH RETAINER, 5/16" SCREW	1
15	1255798GT	BOLT,CARRIAGE,5/16-18X1.25,5,Z	1
16	1262328GT	CABLE, BATTERY BLACK 2/0	1
17	48773-1150GT	SLEEVE,NYLON,.86 ID	1
18	6578GT	CABLE TIE,7 3/8"	3

209.2 Battery Cables (from SN GTH10E-16265)

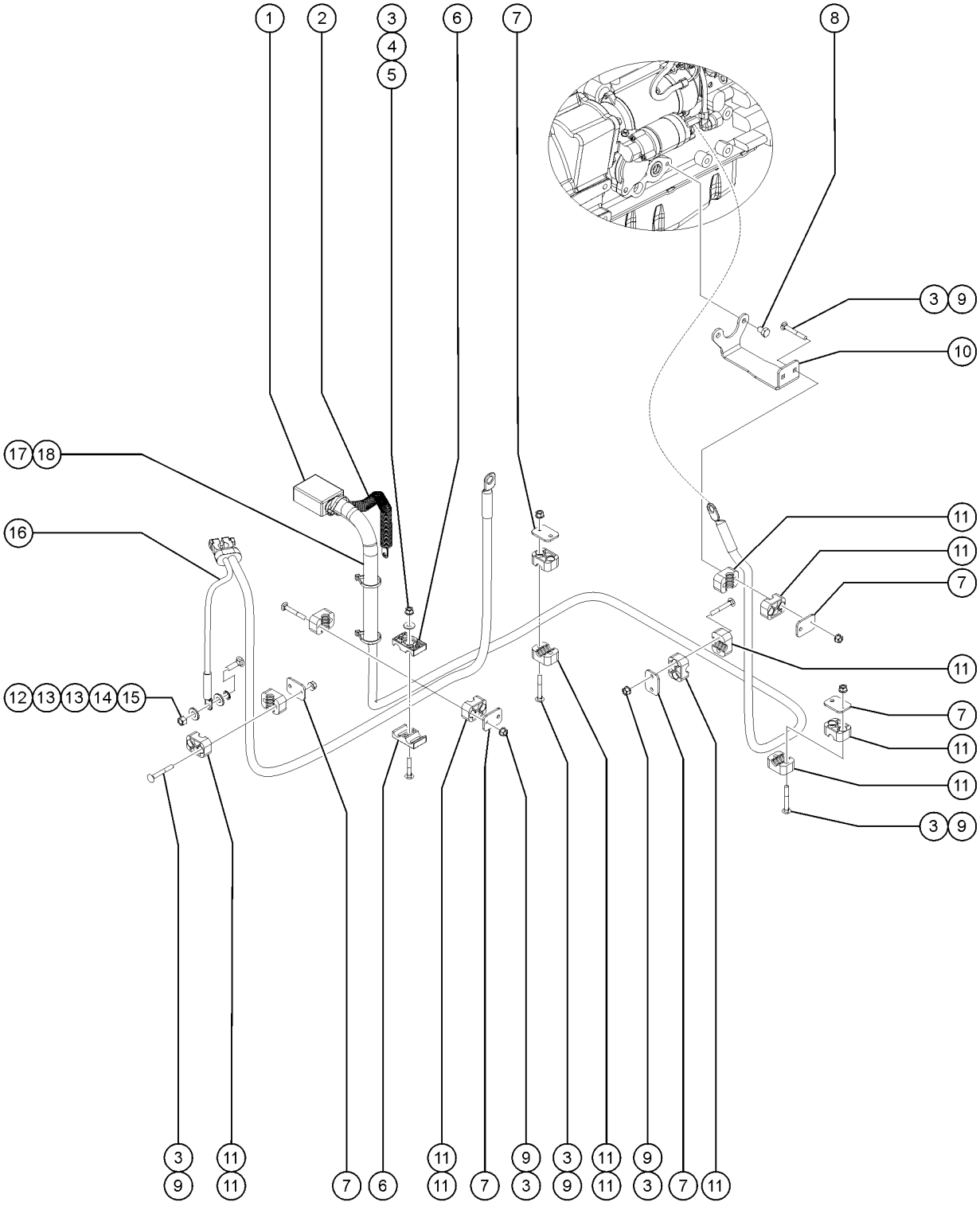

209.2 Battery Cables (from SN GTH10E-16265)

Item	Part No.	Description	Qty.
1	1262327-8300GT	CABLE, BATTERY RED 2/0	1
2	1304900GT	WIRE LOOM, 5/8 DIA, NON SLIT, HI TEMP	12 inches
3	824027GT	NUT, TL FLG, 1/4-20, G, ZAG	15
4	824113GT	WASHER,FLAT,USS,1/4,ZAG	1
5	1255756GT	BOLT,CARRIAGE,1/4-20X1.5,5,ZAG	1
6	78736GT	CLAMP,2 HOSE,PLASTIC,5/8	2
7	117312GT	CLAMP CVR PLATE,SINGLE,GRP 2	6
8	1257704GT	SCREW,HHC,M8-1.25X12,DIN933,10.9,ZAB	2
9	1255797GT	BOLT,CARRIAGE,1/4-20X2,5,ZAG	12
10	1291436GT	FORMING,BAT CABLE MNT,10K DTZ	1
11	1254460GT	CLAMP HALVES,SINGLE,1/4" PIPE	12
12	1274321GT	NUT,NYLOCK,5/16-18,C,ZAG	1
13	5397GT	WASHER, FLAT, USS, 5/16-18	2
14	825005GT	PUSH RETAINER, 5/16" SCREW	1
15	1255798GT	BOLT,CARRIAGE,5/16-18X1.25,5,Z	1
16	1262328-5500GT	CABLE, BATTERY BLACK 2/0	1
17	48773-1150GT	SLEEVE,NYLON,.86 ID	1
18	6578GT	CABLE TIE,7 3/8"	3

210.1 Front Axle, Central Housing

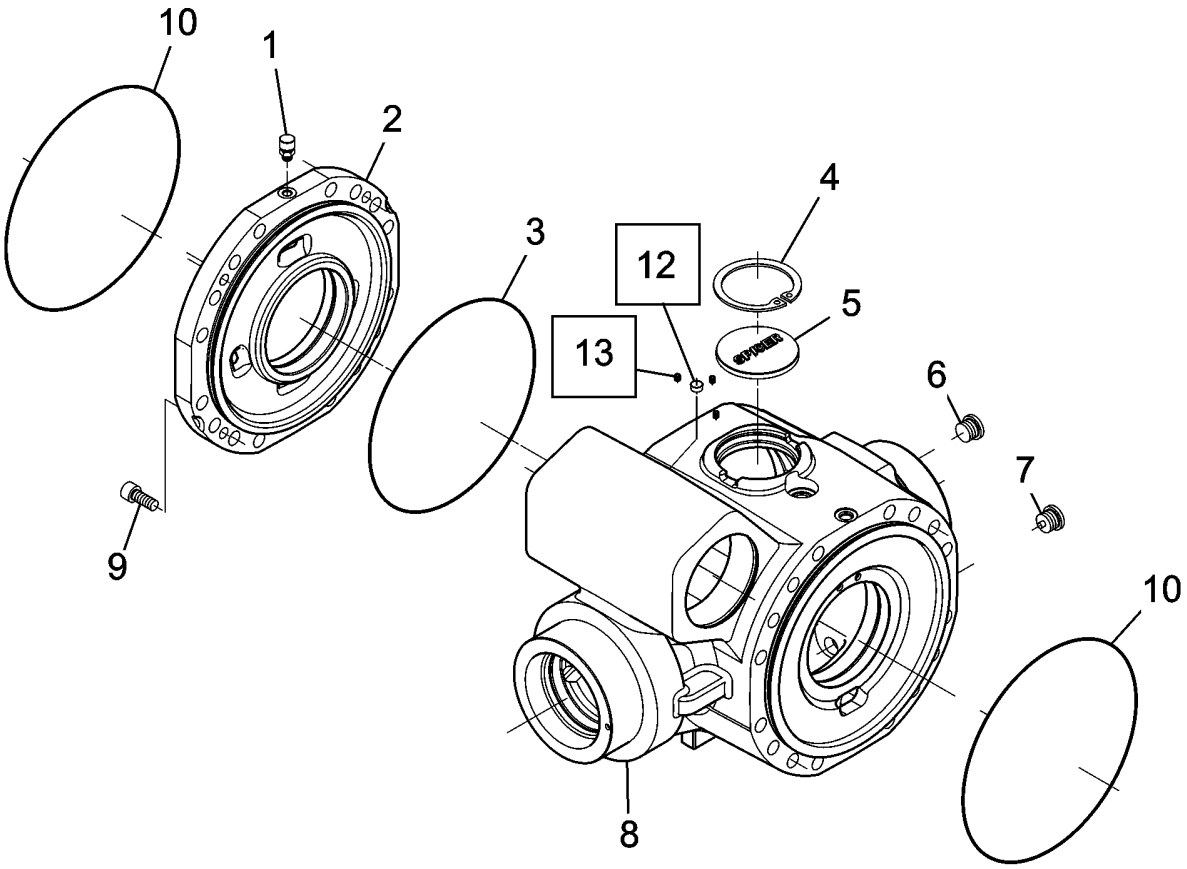

Item	*Part No.*	*Description*	*Qty.*
1	1252669GT	VENT	1
2	1277341GT	INTERMEDIATE COVER	1
3	1277342GT	O - RING	1
4	1252541GT	CIRCLIP	1
5	7-229-926GT	PLUG	1
6		PLUG (1277343) (component no longer available)	1
7	141103GT	MAGNETIC PLUG	1
8	1277344GT	HOUSING	1
9	1277345GT	BOLT	4
10	1277346GT	O - RING	2
12	1277347GT	PLUG	1
13	1277348GT	BOLT	3

211.1 Front Axle, Differential

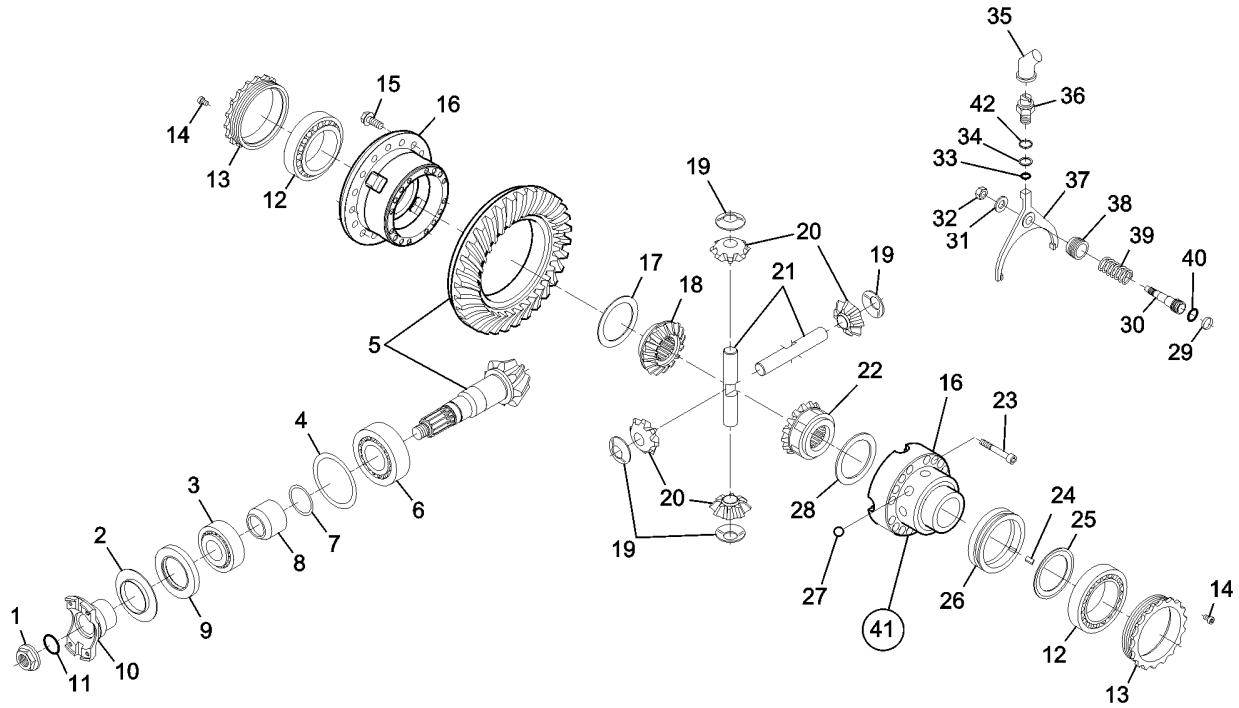

(41) KIT = 16+17+18+19+20+21+22+23+28

Item	Part No.	Description	Qty.
1	1277349GT	NUT	1
2	1252656GT	COVER PLATE	1
3	1277350GT	TAPER ROLLER BEARING	1
4	7-229-662GT	SHIM / 0.10mm	1
4-	7-229-663GT	SHIM / 0.20mm	1
4-	7-229-664GT	SHIM / 0.50mm	1
4-	7-229-665GT	SHIM / 0.15mm	1
5	1277351GT	BEVEL GEAR SET	1
6	7-229-781GT	BEARING	1
7	1252618GT	SHIM KIT	1
8	1277352GT	SPACER	1
9	1252538GT	SEAL	1
10	1277353GT	FLANGE	1
11	7-229-792GT	O-RING	1
12	7-229-773GT	BEARING	2
13	1277354GT	RING NUT	2
14	1277355GT	BOLT	2
15	1252570GT	BOLT	16
16	1252605GT	DIFFERENTIAL CARRIER	1
17	1252621GT	FRICTION WASHER	1
18	1277356GT	DIFFERENTIAL SIDE GEAR	1
19	228991GT	FRICTION WASHER	4
20	1277357GT	DIFFERENTIAL PINION	4
21	1277358GT	DIFFERENTIAL SHAFT	2
22	1277359GT	DIFFERENTIAL SIDE GEAR	1
23	1277360GT	BOLT	15
24	1277361GT	WOODRUFF KEY	1
25	7-229-796GT	FRICTION WASHER	1

211.1 Front Axle, Differential

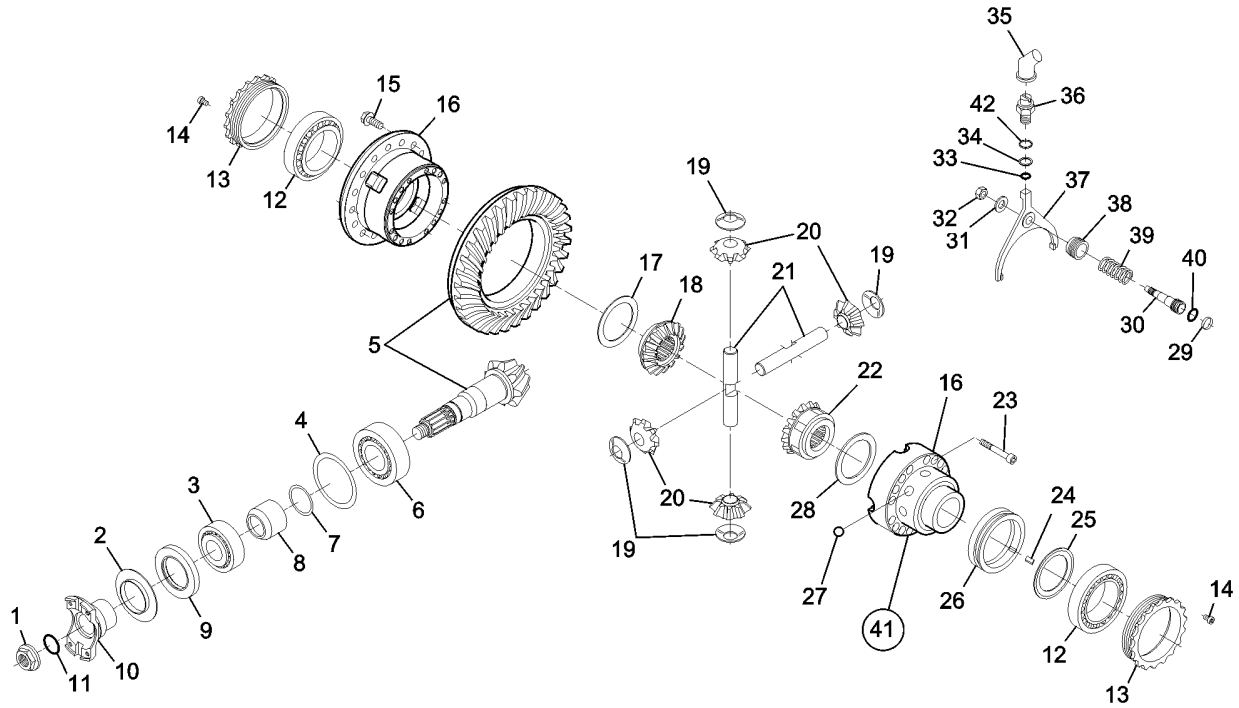

(41) KIT = 16+17+18+19+20+21+22+23+28

Item	Part No.	Description	Qty.
26	1277362GT	SLEEVE	1
27	7-229-731GT	DETENT BALL	8
28	7-229-805GT	FRICTION WASHER	1
29	7-229-804GT	GASKET	1
30	1252594GT	PISTON	1
31	1252555GT	SPRING WASHER	1
32	1252551GT	NUT	1
33	1252533GT	O-RING	1
34	1252556GT	SEAL WASHER	1
35	1252675GT	BOOT	1
36	1252676GT	SECURITY SWITCH	1
37	1277371GT	SELECTOR FORK	1
38	1277372GT	RING NUT	1
39	1277373GT	SPRING	1
40	1252534GT	O-RING	1
41	1277375GT	DIFFERENTIAL	1
42	1252557GT	SEAL WASHER	1

212.1 Front Axle, Hub Reduction

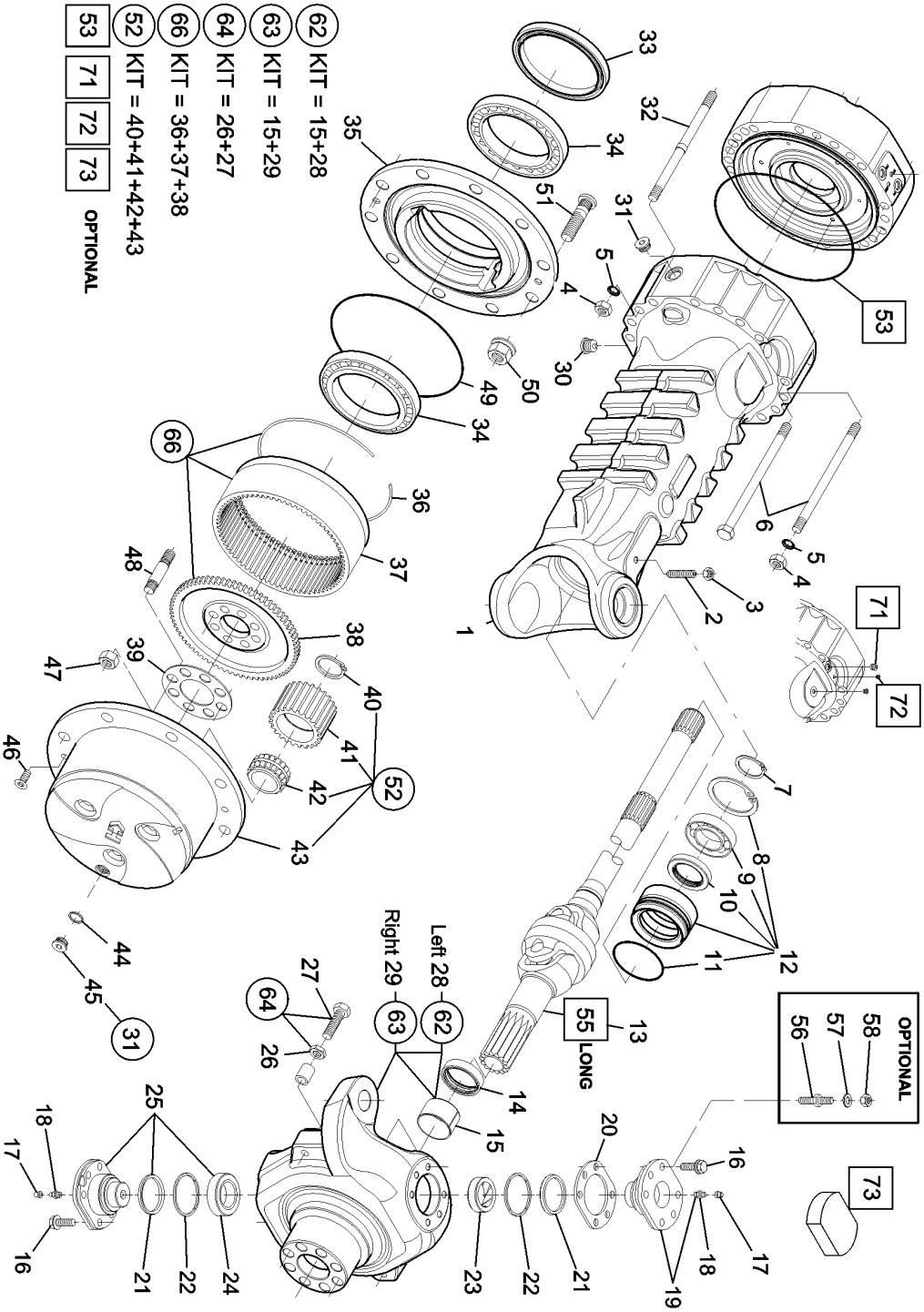

Item	Part No.	Description	Qty.
1	824251GT	AXLE ARM,BRAKE (213.06.035.01)	2
2	1277377GT	BOLT	2
3	7-229-623GT	NUT	2
4	1259508GT	NUT	8
5	7-229-561GT	Washer	8
6	7-229-809GT	BOLT	24
7	1277381GT	CIRCLIP	2
8	1277382GT	CIRCLIP	2
9	7-229-564GT	BALL BEARING	2
10	1252670GT	SEAL	2
11	7-229-566GT	O-RING	2
12	7-229-562GT	REDUCTION BUSHING	2
13	1277383GT	DOUBLE UNIVERSAL JOINT	2
14	7-229-821GT	SEAL	2
15	1277385GT	THRUST BUSHING	1
16	633070GT	SCREW	24
18	1277387GT	GREASE FITTING	2
19	1277388GT	PIVOT PIN	2
20	7-229-813GT	SHIM / 0.15mm	2
20-	7-229-814GT	SHIM/020MM	2
20-	7-229-815GT	SHIM / 0.50mm	2
21	1277389GT	DUST EXCLUDER	2
23	1277390GT	BUSHING	2
24	7-229-819GT	BEARING	2
25	1277391GT	PIVOT PIN	2
26	1277392GT	NUT	4
27	1277393GT	BOLT	4
30	07.0709.0747GT	Magnet Plug	2

212.1 Front Axle, Hub Reduction

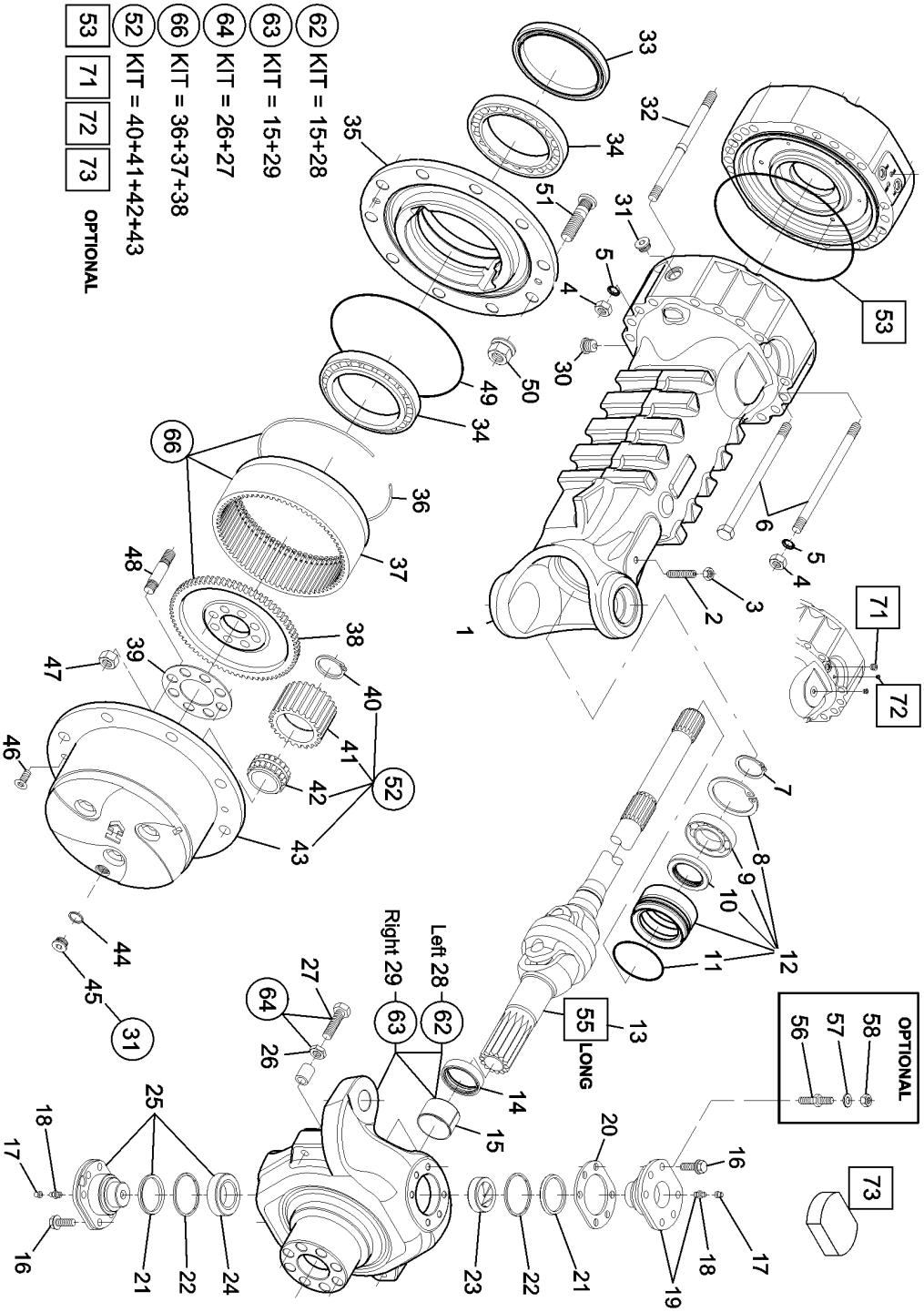

Item	Part No.	Description	Qty.
31		PLUG (1277395) (component no longer available)	2
32	1277396GT	STUD	8
33	1252619GT	SEAL	2
34		BEARING(ALSO BUY 7-229-938) no longer available	4
34A	7-229-938GT	BEARING CUP also order 7-229-827	4
35	1277398GT	WHEEL HUB	2
36	1252662GT	CIRCLIP	2
37		RING GEAR (1277399) (component no longer available)	2
38	1277400GT	RING GEAR SUPPORT	2
39	1277401GT	LOCKING PLATE	2
40	1252542GT	SNAP RING	2
41	1252660GT	PLANET GEAR	6
42	1277402GT	BEARING	6
43	1277403GT	PLANET GEAR CARRIER	1
45	1277404GT	PLUG	2
46	1277405GT	COUNTERSUNK BOLT	4
47	1277406GT	NUT	16
48	1277407GT	STUD	16
49	7-229-831GT	O-RING	2
50	7-229-592GT	WHEEL NUT	20
51	1277497GT	WHEEL STUD - M22x1.5 - 76mm	20
52	1277411GT	PLANET GEAR CARRIER KIT	2
53	1277346GT	O - RING	2
62	1277413GT	STEERING CASE	1
63	1277414GT	STEERING CASE	1
64	1277415GT	STEERING ADJUST BOLT KIT	4
66	1277416GT	RING GEAR SUPPORT KIT	2
71	1277417GT	PLUG	2

212.1 Front Axle, Hub Reduction

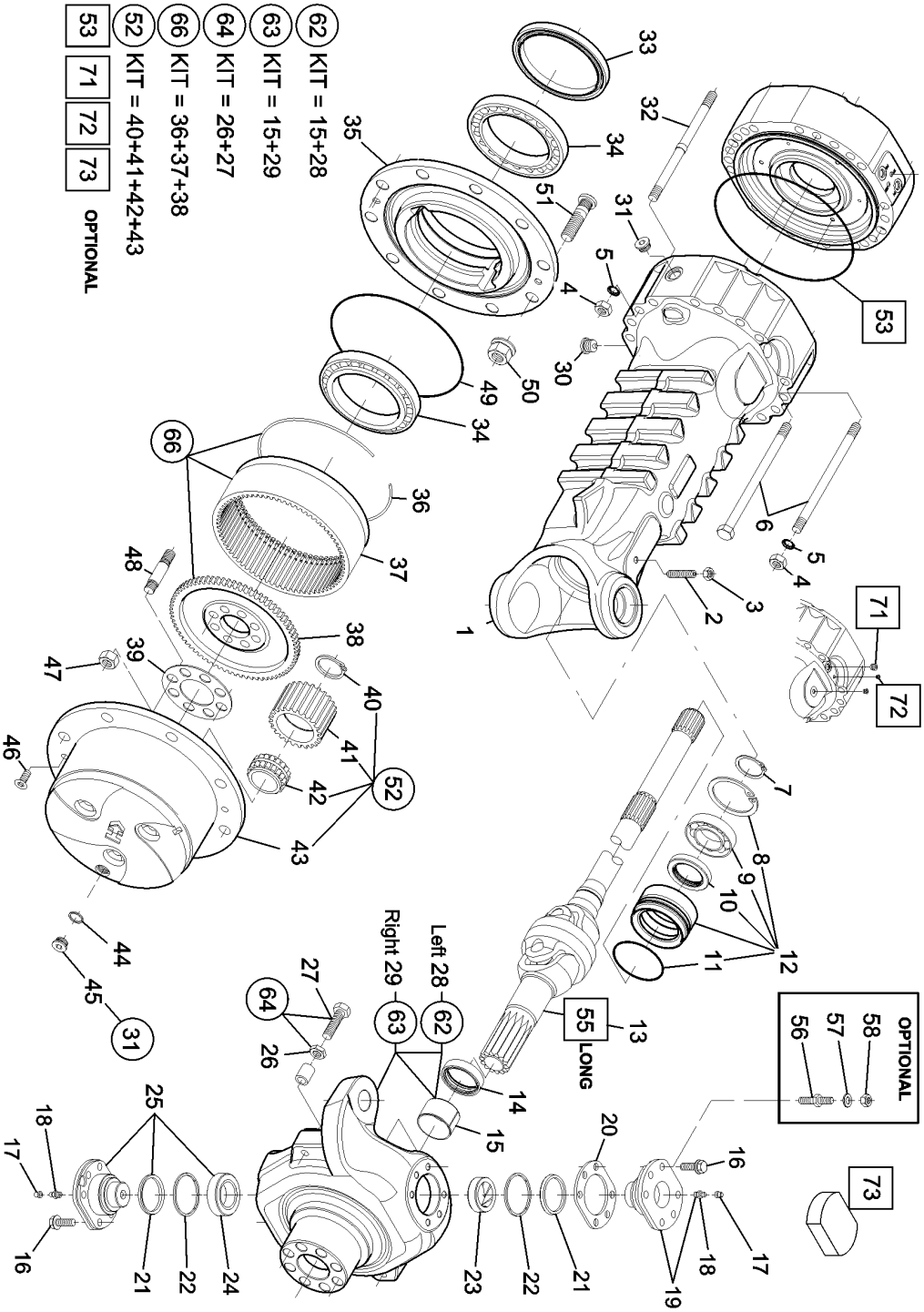

Item	Part No.	Description	Qty.
73	1277418GT	COVER	2

213.1 Front Axle, Brakes

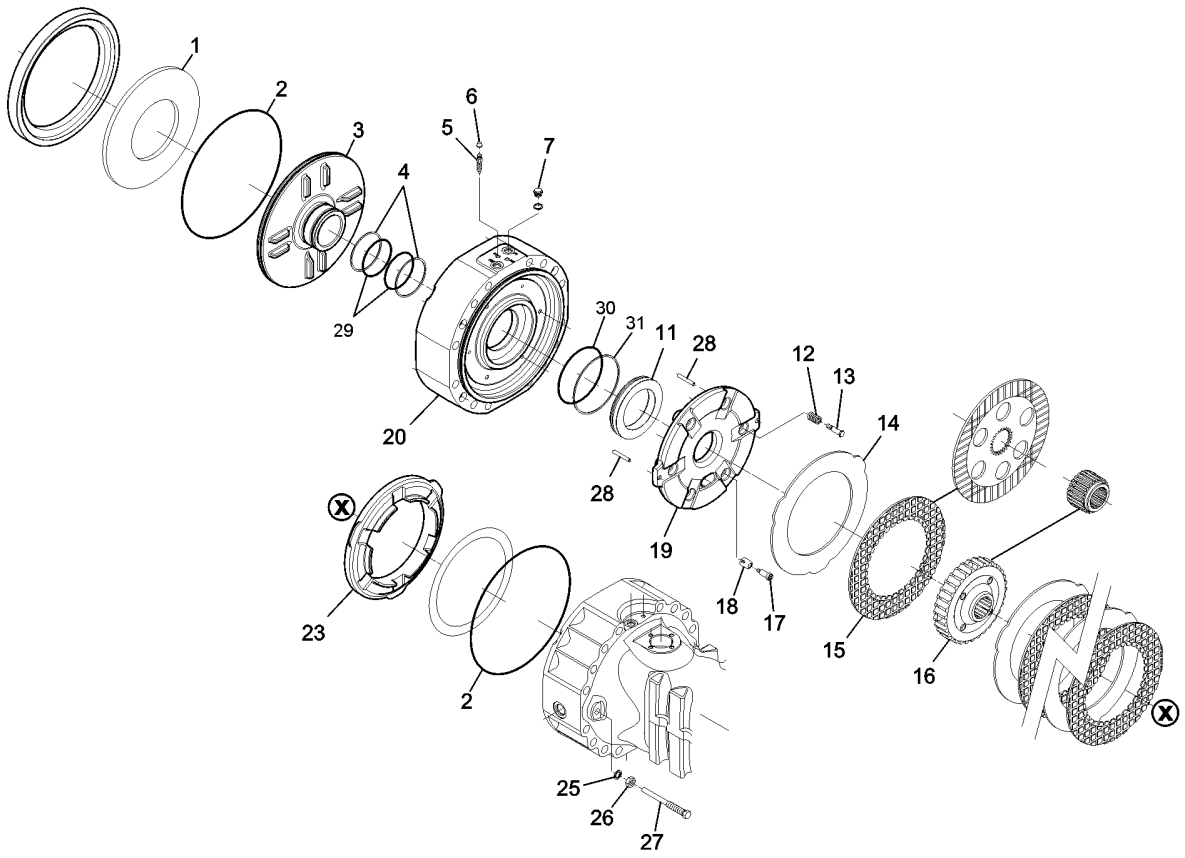

Item	Part No.	Description	Qty.
1	1252613GT	SPRING	2
2	1277346GT	O - RING	3
3	9990491GT	PISTON	2
4	1273946GT	SEAL	4
5	824478GT	BLEEDER BOLT	4
6	1277419GT	PLUG	4
7	1252586GT	PLUG	4
10	1277421GT	SEAL Seal on item 9 is not required for this Break (older style)	2
11	1277422GT	PISTON	2
12	1252628GT	SPRING	6
13	1252625GT	ADJUSTING BOLT	6
14	1252626GT	INTERMEDIATE BRAKE DISC	6
15	1252617GT	BRAKE DISC	6
16	1252614GT	REDUCTION BUSHING	2
17	825921GT	BOLT,ADJUSTING (112.07.037.13)	6
18	1277425GT	SPRING	6
19	1277426GT	INTERMEDIATE BRAKE DISC	2
20	1277427GT	COVER	2
23	1277428GT	SPACER	2
25		LOCK WASHER USE UNTIL EXHAUSTED.	4
25B	1252559GT	LOCKWASHER REPLACES 1277429	4
26	1252549GT	NUT	4
27	1277431GT	BOLT	4
28	1252561GT	DOWEL	4
29	1252576GT	SEAL	2
31	1277421GT	SEAL Seal on item 30 is not required for this Break (older style)	2

214.1 Front Axle, Steering

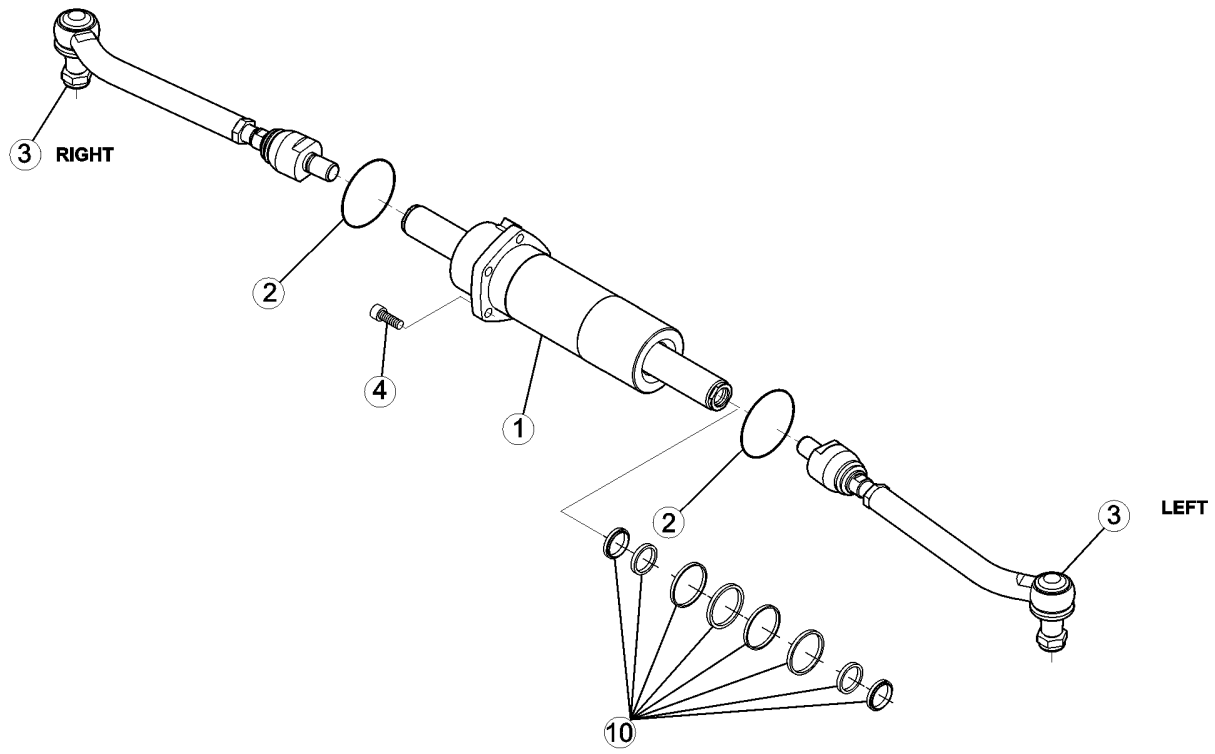

214.1 Front Axle, Steering

Item	*Part No.*	*Description*	*Qty.*
1	1277582GT	CYLINDER	1
2	1277583GT	O - RING	2
3	1277584GT	TIE ROD, GTH1056	2
4	1277585GT	BOLT	5
10	07.0709.0419GT	Joint Kit	1

215.1 Front Axle, Trunnion

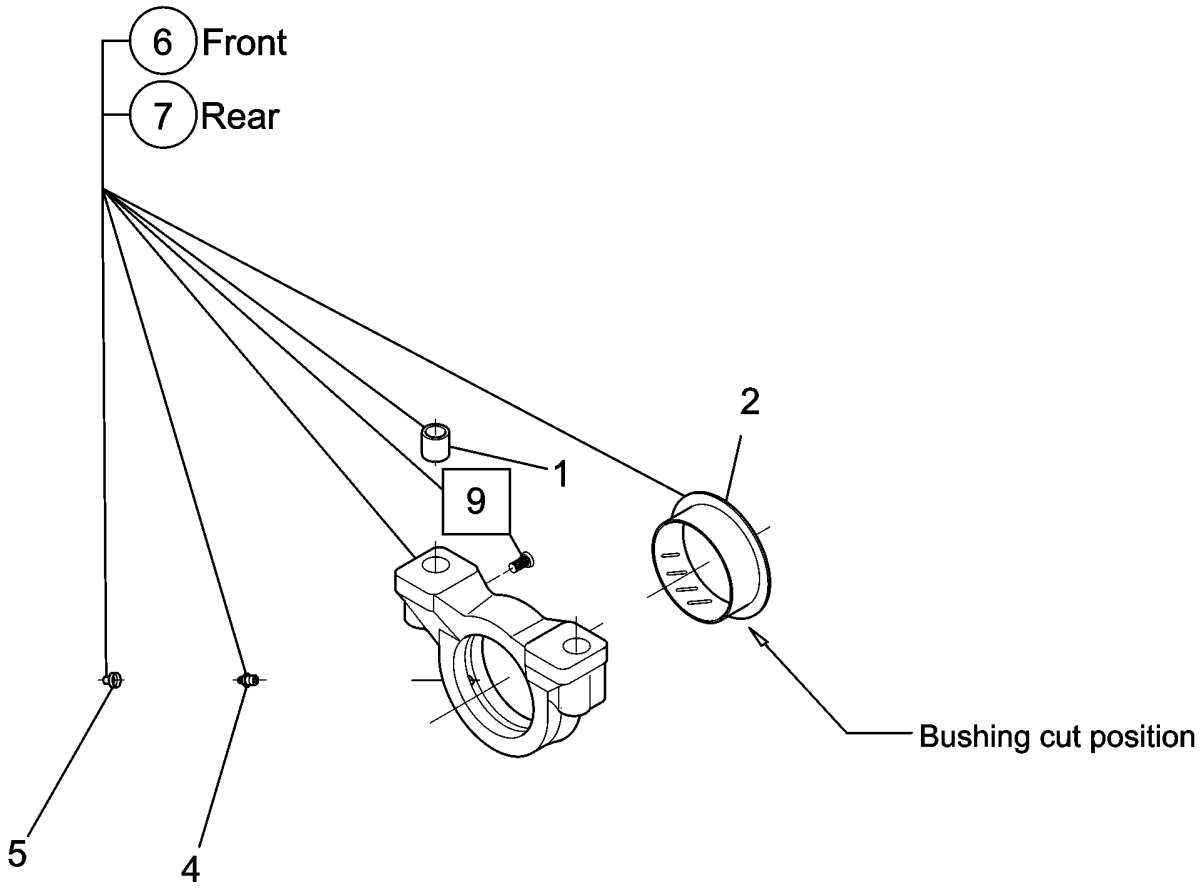

215.1 Front Axle, Trunnion

Item	*Part No.*	*Description*	*Qty.*
1	1252657GT	Bushing	2
2	1277588GT	THRUST BUSHING	1
4	1277589GT	GREASE FITTING	1
5	1277590GT	PLUG	1
6	1277591GT	TRUNION KIT	1
7	1277592GT	TRUNION KIT	1
9	1277593GT	BOLT	1

216.1 Rear Axle, Central Housing

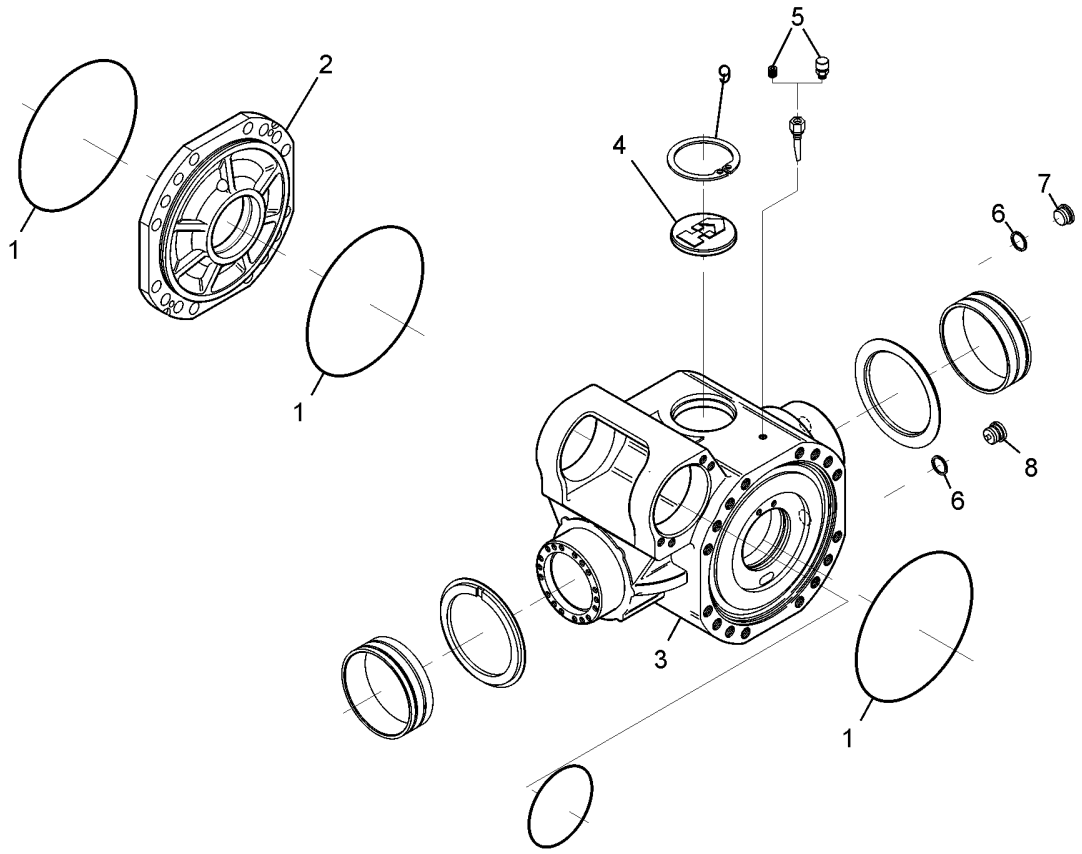

216.1 Rear Axle, Central Housing

Item	*Part No.*	*Description*	*Qty.*
1	1259504GT	O-RING	3
2	1277434GT	COVER Use until stock exhaust, replaced by 1259513GT	1
2B	1259513GT	COVER	1
3	1277435GT	HOUSING	1
4	1277436GT	PLUG	1
5	1277437GT	VENT	1
7	141104GT	PLUG, 213/143 REAR AXLE	1
8	1252579GT	MAGNETIC PLUG	1
9	1277439GT	CIRCLIP	1

217.1 Rear Axle, Differential

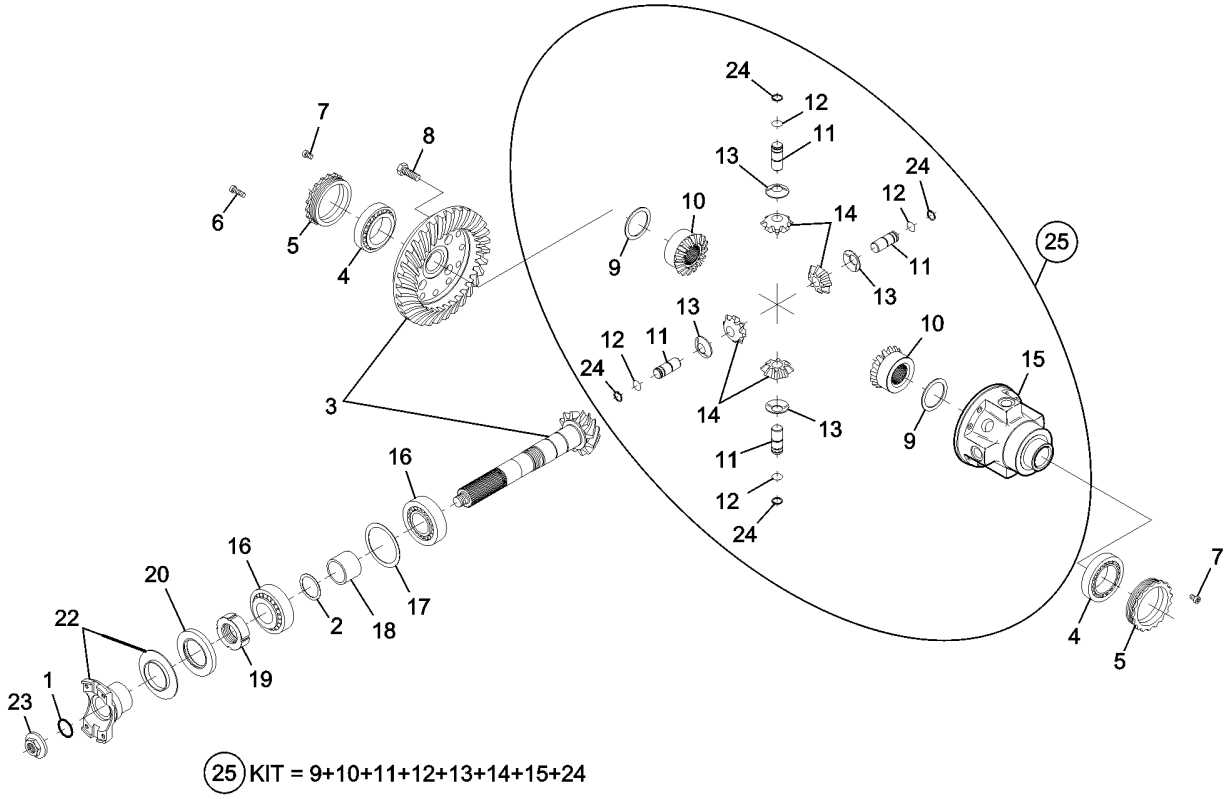

(25) KIT = 9+10+11+12+13+14+15+24

Item	Part No.	Description	Qty.
1	1277440GT	O - RING	1
2	1277441GT	SHIM / 0.15mm	1
2-	1277442GT	SHIM / 0.20mm	1
2-	1277443GT	SHIM / 0.40mm	1
2-	1277444GT	SHIM / 0.50mm	1
2-	1277445GT	SHIM / 0.25mm	1
2-	1277446GT	SHIM / 0.35mm	1
3	1277447GT	BEVEL GEAR SET	1
4	1277448GT	TAPER ROLLER BEARING	2
5	1277449GT	RING NUT	2
6	1277450GT	CYLINDER BOLT	4
7	1277451GT	BOLT	2
8	1277452GT	BOLT	12
9	1277453GT	FRICTION WASHER	2
10	1259518GT	DIFFERENTIAL SIDE GEAR	2
11	1277455GT	PIN	4
12	1277456GT	CIRCLIP	4
13	1277457GT	FRICTION WASHER	4
14	1259516GT	DIFFERENTIAL PINION	4
15	7-229-546GT	Differential Carrier	1
16	1277460GT	TAPER ROLLER BEARING	2
17	1277461GT	SHIM / 0.20mm	1
17-	1277462GT	SHIM / 0.30mm	1
17-	1277463GT	SHIM / 0.15mm	1
17-	1277464GT	SHIM / 0.10mm	1
18	1277465GT	SPACER	1
19	1277466GT	RING NUT	1
20	1259501GT	SEAL	1

217.1 Rear Axle, Differential

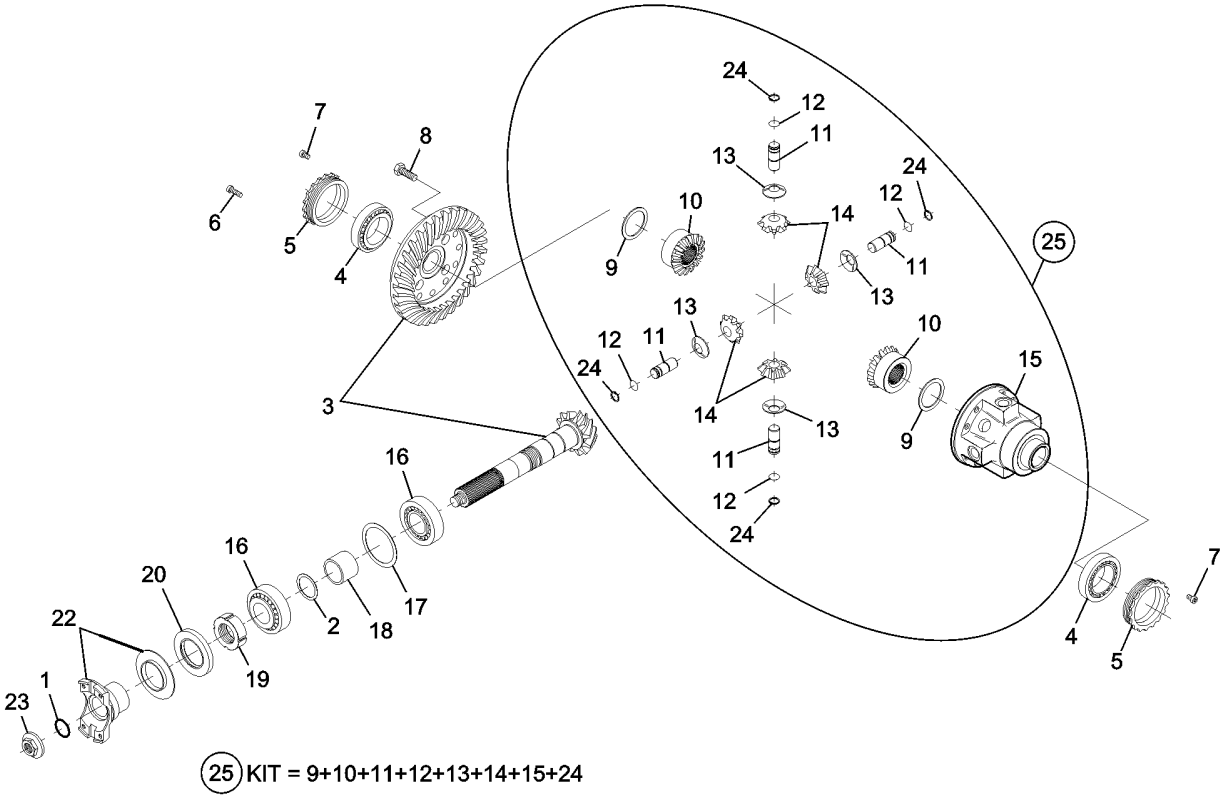

(25) KIT = 9+10+11+12+13+14+15+24

Item	Part No.	Description	Qty.
22	1277468GT	FLANGE	1
23	1277469GT	NUT	1
24	1277470GT	CIRCLIP	4
25	1277471GT	DIFFERENTIAL KIT	1

218.1 Rear Axle, Hub Reduction

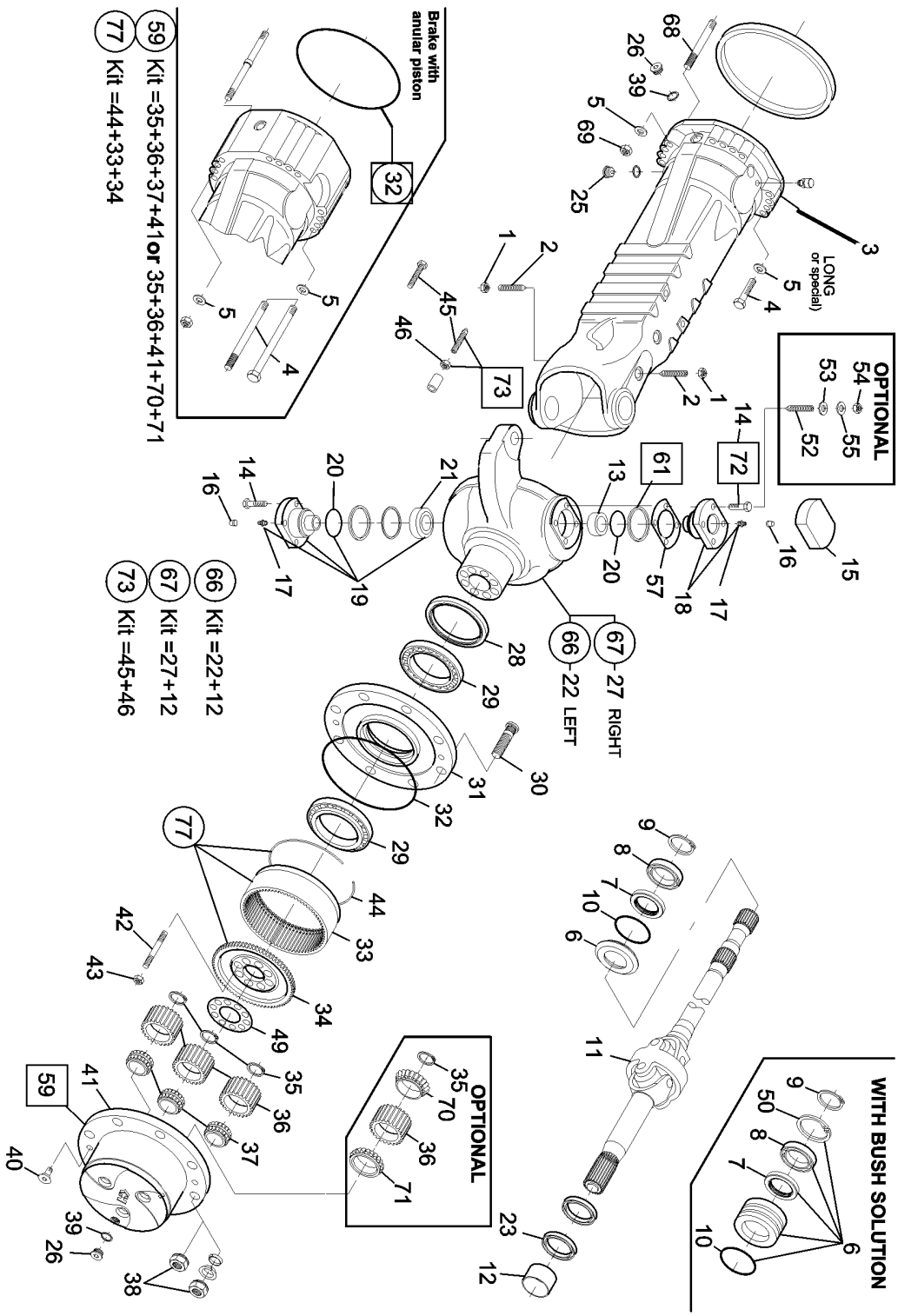

Item	Part No.	Description	Qty.
1	1277472GT	NUT	2
2	1277473GT	BOLT	2
3	1277474GT	AXLE CASE	2
4	1277475GT	BOLT	32
6	1277476GT	REDUCTION BUSHING	2
7	1252670GT	SEAL	2
8	1277478GT	BALL BEARING	2
9	1277479GT	CIRCLIP	2
10	1252532GT	O-RING	2
11	1277481GT	DOUBLE UNIVERSAL JOINT	2
12	1277482GT	THRUST BUSHING	1
13	1277483GT	BUSHING	2
14	1277484GT	BOLT	24
15	1277485GT	COVER	2
16	1277486GT	PLUG	2
17	1277487GT	GREASE FITTING	2
18	1277488GT	PIVOT PIN	2
19	1277489GT	PIVOT PIN	2
20	1277490GT	DUST EXCLUDER	2
21	1277491GT	BEARING	2
23	1277492GT	SEAL	2
25	1277493GT	MAGNETIC PLUG	2
26	1277494GT	PLUG	4
28	1277495GT	SEAL	2
29	1277496GT	BEARING	2
30	1277497GT	WHEEL STUD - M22x1.5 - 76mm	4
31	1277498GT	WHEEL HUB	20
32	7-229-831GT	O-RING	2

218.1 Rear Axle, Hub Reduction

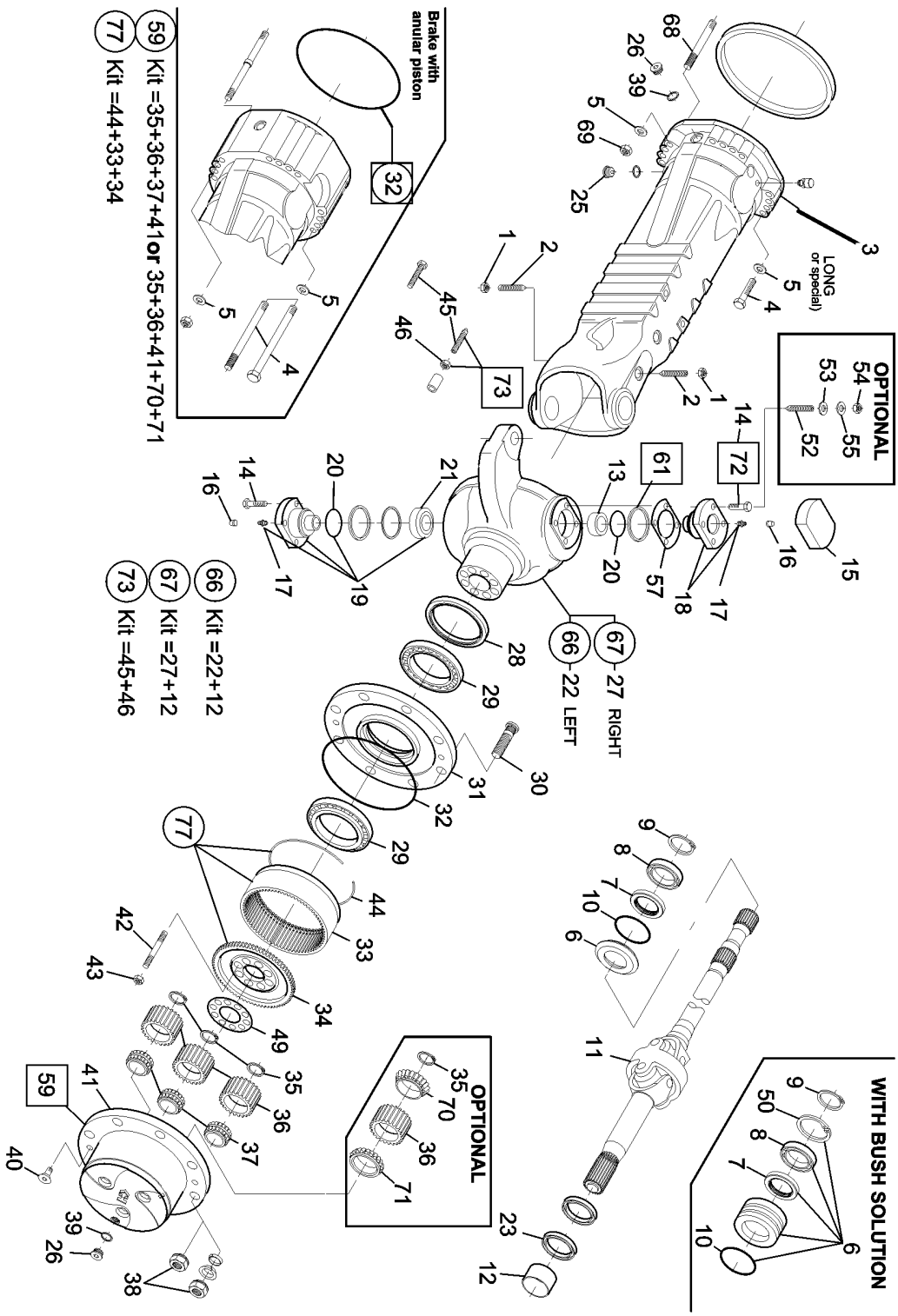

Item	Part No.	Description	Qty.
33	1277500GT	RING GEAR	2
34	1277501GT	RING GEAR SUPPORT	2
35	1277502GT	CIRCLIP	2
36	1277503GT	DIFFERENTIAL PINION	3
38	7-229-592GT	WHEEL NUT	20
40	1277505GT	COUNTERSUNK BOLT	4
41	1277506GT	PLANET GEAR CARRIER	1
42	1277507GT	STUD	20
43	1277508GT	NUT	20
44	1277509GT	CIRCLIP	2
45	1277510GT	BOLT	4
46	1277511GT	NUT	4
49	1277512GT	LOCKING PLATE	2
50	1277513GT	CIRCLIP	2
57	1277514GT	SHIM / 0.15mm	2
57-	1277515GT	SHIM / 0.20mm	2
57-	1277516GT	SHIM / 0.50mm	2
59	1277517GT	PLANET GEAR CARRIER	2
66	1277518GT	STEERING CASE	1
67	1277519GT	STEERING CASE	1
70	1277520GT	BEARING	6
71	1277521GT	BEARING	6
73	1277522GT	STEERING ADJUST BOLT KIT	4
77	1277523GT	RING GEAR SUPPORT	2

219.1 Rear Axle, Brakes

Colour	SAHR or SAHR + Service Brake (mm)	Length (mm)
Black	1.00	20.00
Yellow	0.75	19.75
White	0.50	19.50
Grey	1.25	20.25

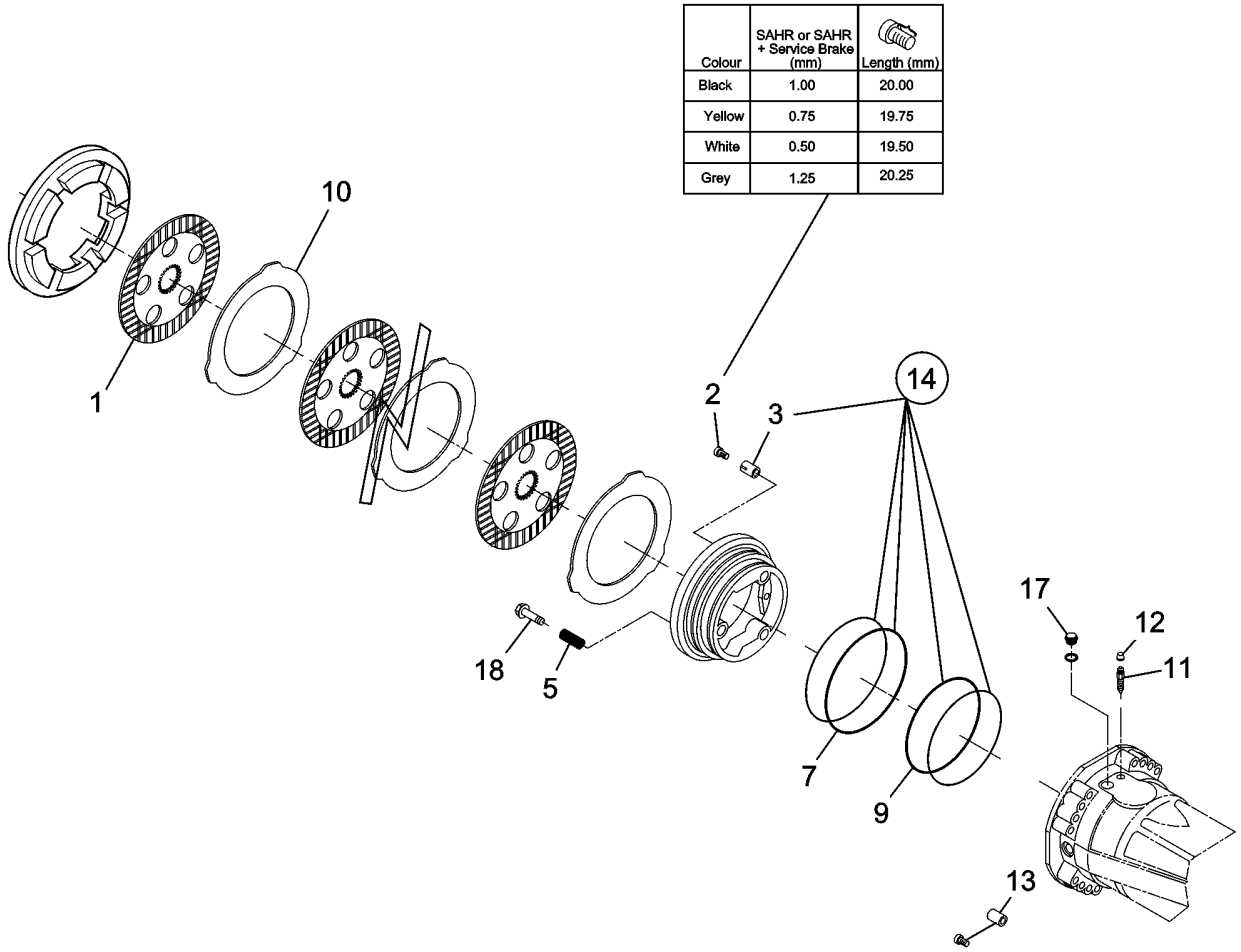

Item	Part No.	Description	Qty.
1	1277524GT	DISC	6
2	1277525GT	ADJUSTING BOLT Use until stock exhaust, replaced by 138041GT	6
2B	138041GT	ADJUSTING BOLT	6
3	1277526GT	SPRING Use until stock exhaust, replaced by 1252583GT	6
3B	1252583GT	SPRING	6
5	1277527GT	SPRING Use until stock exhaust, replaced by 1252628GT	6
5B	1252628GT	SPRING	6
7	1273946GT	SEAL	2
9	1277529GT	O - RING	2
10	1277530GT	INTERMEDIATE BRAKE DISC Use until stock exhaust, replaced by 1259532GT	8
10B	1259532GT	INTERMEDIATE DISC BRAKE	6
11	1277531GT	BLEEDING BOLT	2
12	1277532GT	PLUG	2
13	1277533GT	PILOT BOLT	2
14	1277534GT	PISTON	2
17	1277535GT	PLUG	2
18	1277536GT	ADJUSTING BOLT Use until stock exhaust, replaced by 1252625GT	6
18B	1252625GT	ADJUSTING BOLT	6

220.1 Rear Axle, Steering

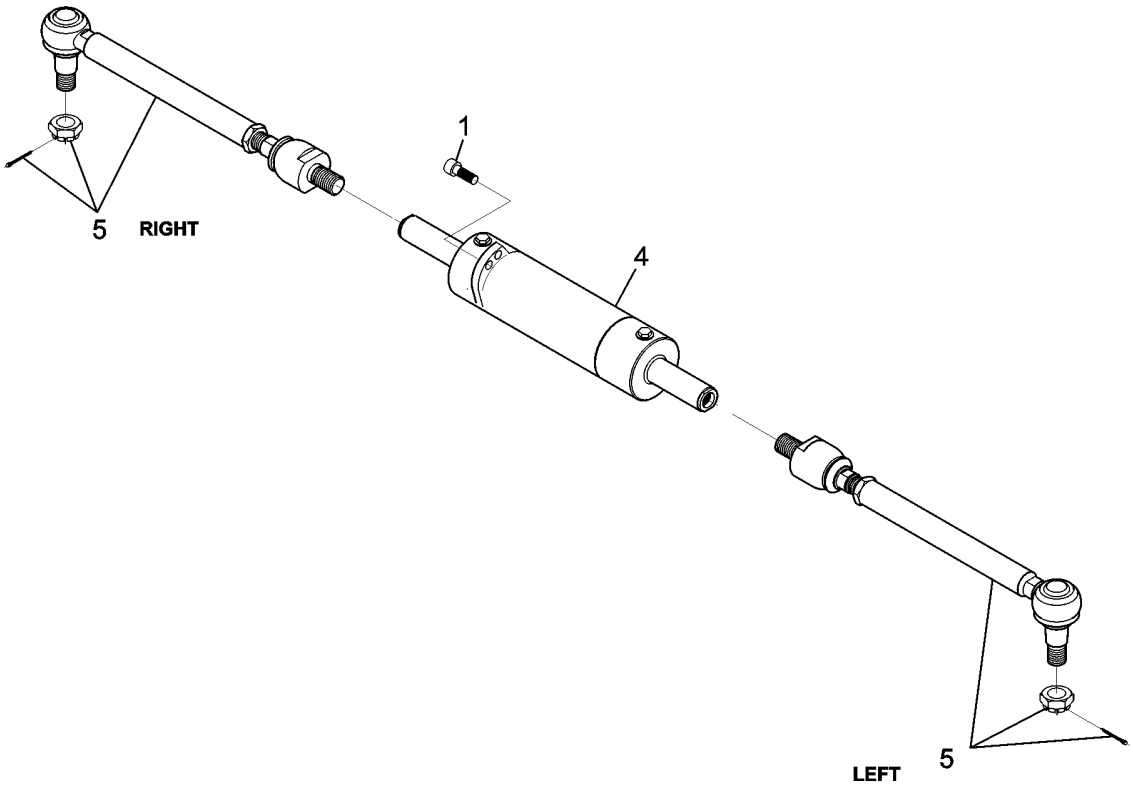

Item	*Part No.*	*Description*	*Qty.*
1	1277537GT	BOLT	4
4	1277538GT	CYLINDER	1
4-	1289774GT	SEAL KIT (1259561)	
5	1277539GT	BAR	2

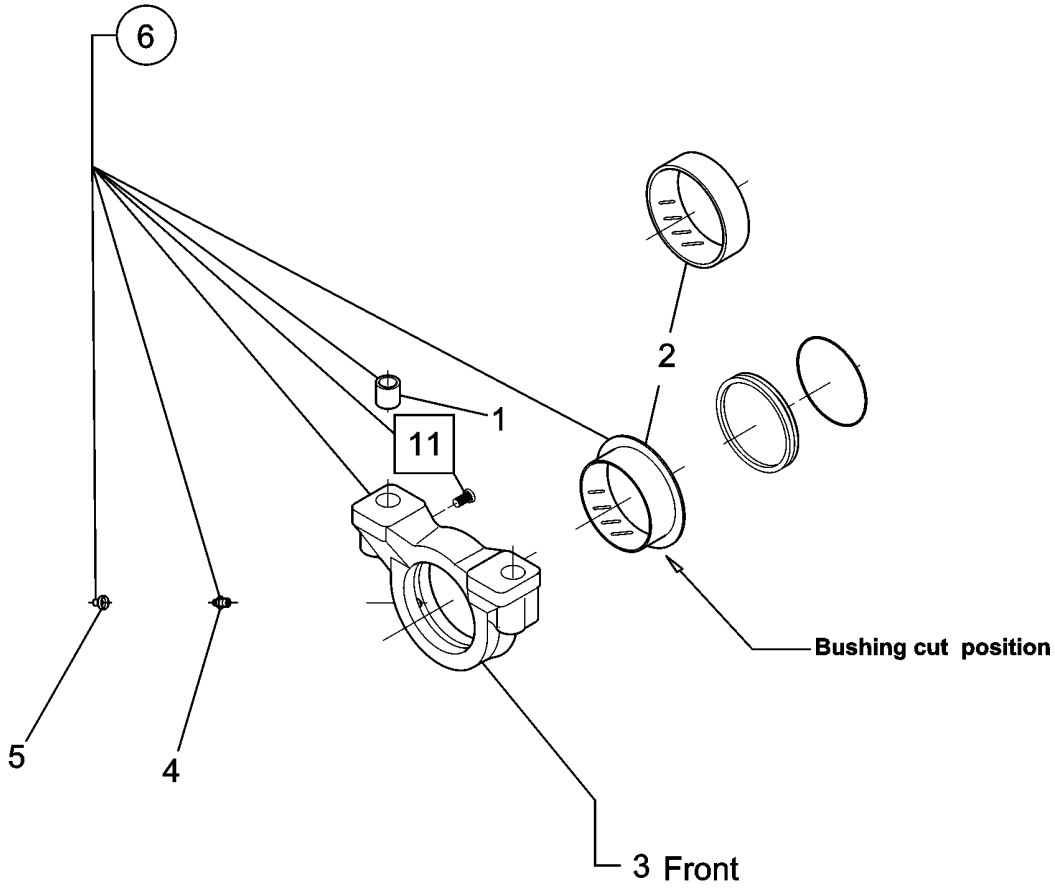

6 Kit=1+2+3+4+5+ 11

221.1 Rear Axle, Trunion

Item	*Part No.*	*Description*	*Qty.*
1	7-229-620GT	REDUCTION BUSHING	4
2	1277541GT	THRUST BUSHING	2
4	1277542GT	GREASE FITTING	2
5	1277543GT	PLUG	2
6	1277544GT	TRUNION KIT	2
11	1277545GT	BOLT	2

301.1 ZF Drive Shaft Assembly

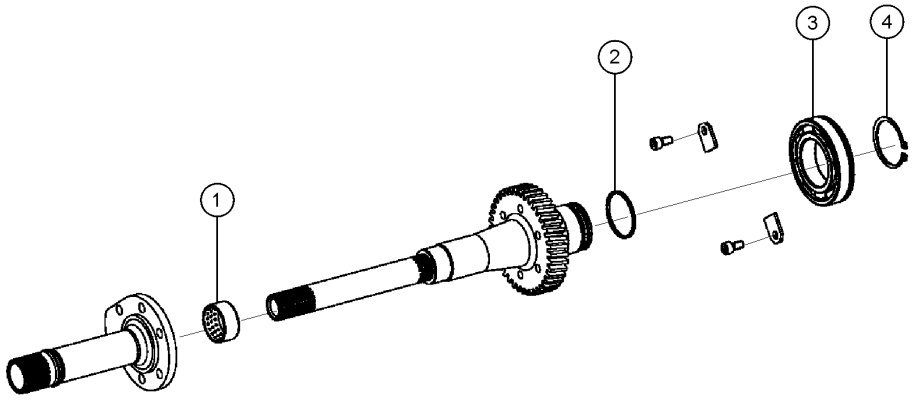

301.1 ZF Drive Shaft Assembly

Item	*Part No.*	*Description*	*Qty.*
1	1252230GT	BEARING BUSHING	1
2	1308550GT	R-RING 55,0X3,0	1
3	1252366GT	BALL BEARING	1
4	1308549GT	RETAINING RING 55X2	1

302.1 ZF First Gear Assembly

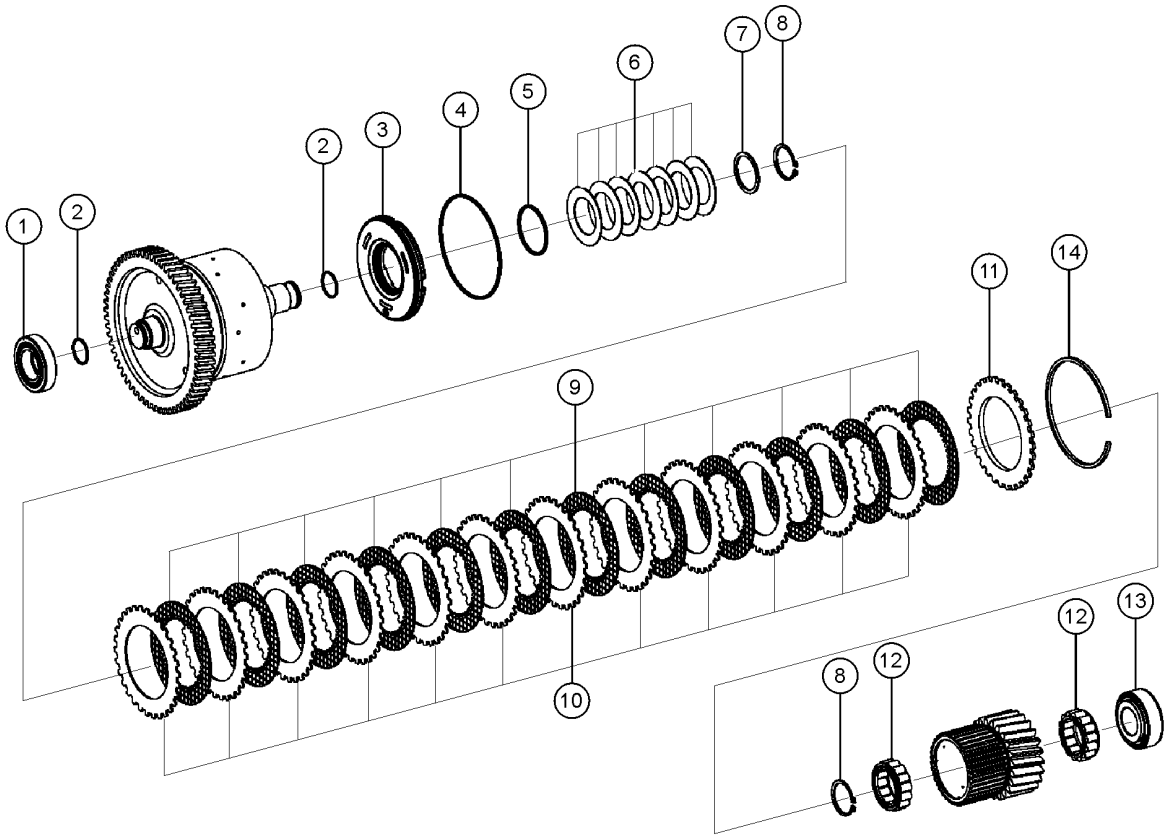

302.1 ZF First Gear Assembly

Item	Part No.	Description	Qty.
1	1308781GT	TAPERED ROLLER BEARING 34,925X65,088X18,288	1
2	1252354GT	RECTANGULAR RING	2
3	1308605GT	PISTON KOLBEN M.EINGEPRESSTEM VENTIL	1
4	1252272GT	O-RING	1
5	1252273GT	O-RING	1
6	1308608GT	CUP SPRING 68,5X43,5X1,3	7
7	1308775GT	SHIM h=2,000	1
8	1308776GT	RETAINING RING 40X1,75	2
9	1308612GT	INNER CLUTCH DISK	12
10	1308613GT	OUTER CLUTCH DISK	12
11	1308614GT	END SHIM	1
12	1308777GT	SPHERICALLY SEATED BEARING	2
13	1308782GT	TAPERED ROLLER BEARING KPL.	1
14	1252329GT	SNAP RING h=2,50	1
14-	1252330GT	SNAP RING h=2,75	1
14-	1252331GT	SNAP RING h=3,00	1
14-	1252332GT	SNAP RING h=3,25	1
14-	1252333GT	SNAP RING h=3,50	1
14-	1252334GT	SNAP RING h=3,75	1
14-	1252335GT	SNAP RING h=4,00	1

303.1 ZF Second Gear Assembly

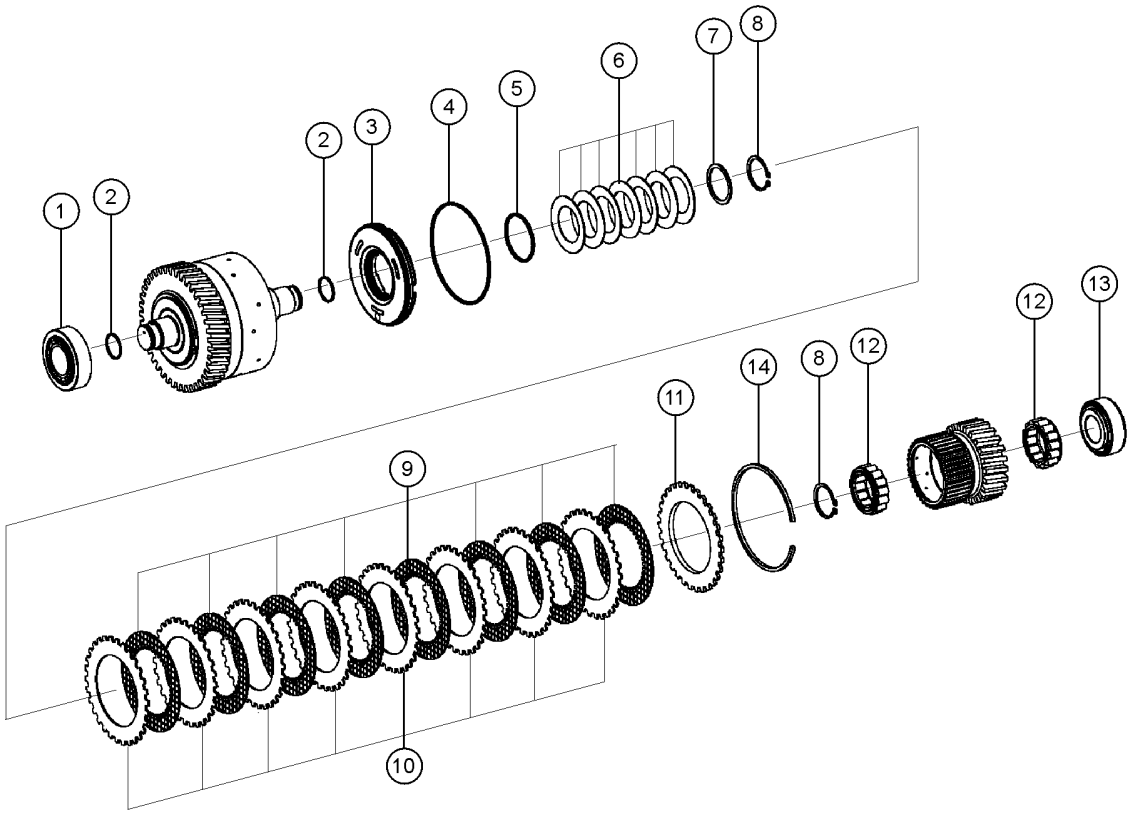

Item	Part No.	Description	Qty.
1	1252463GT	ROLLER BEARING	1
2	1252354GT	RECTANGULAR RING	2
3	1308605GT	PISTON KOLBEN M.EINGEPRESSTEM VENTIL	1
4	1252272GT	O-RING	1
5	1252273GT	O-RING	1
6	1308608GT	CUP SPRING 68,5X43,5X1,3	7
7	1308775GT	SHIM h=2,000	1
8	1308776GT	RETAINING RING 40X1,75	2
9	1308612GT	INNER CLUTCH DISK	8
10	1308613GT	OUTER CLUTCH DISK	8
11	1308614GT	END SHIM	1
12	1308777GT	SPHERICALLY SEATED BEARING	2
13	1308782GT	TAPERED ROLLER BEARING KPL.	1
14	1252329GT	SNAP RING h=2,50	1
14-	1252330GT	SNAP RING h=2,75	1
14-	1252331GT	SNAP RING h=3,00	1
14-	1252332GT	SNAP RING h=3,25	1
14-	1252333GT	SNAP RING h=3,50	1
14-	1252334GT	SNAP RING h=3,75	1
14-	1252335GT	SNAP RING h=4,00	1

304.1 ZF Third Gear Assembly

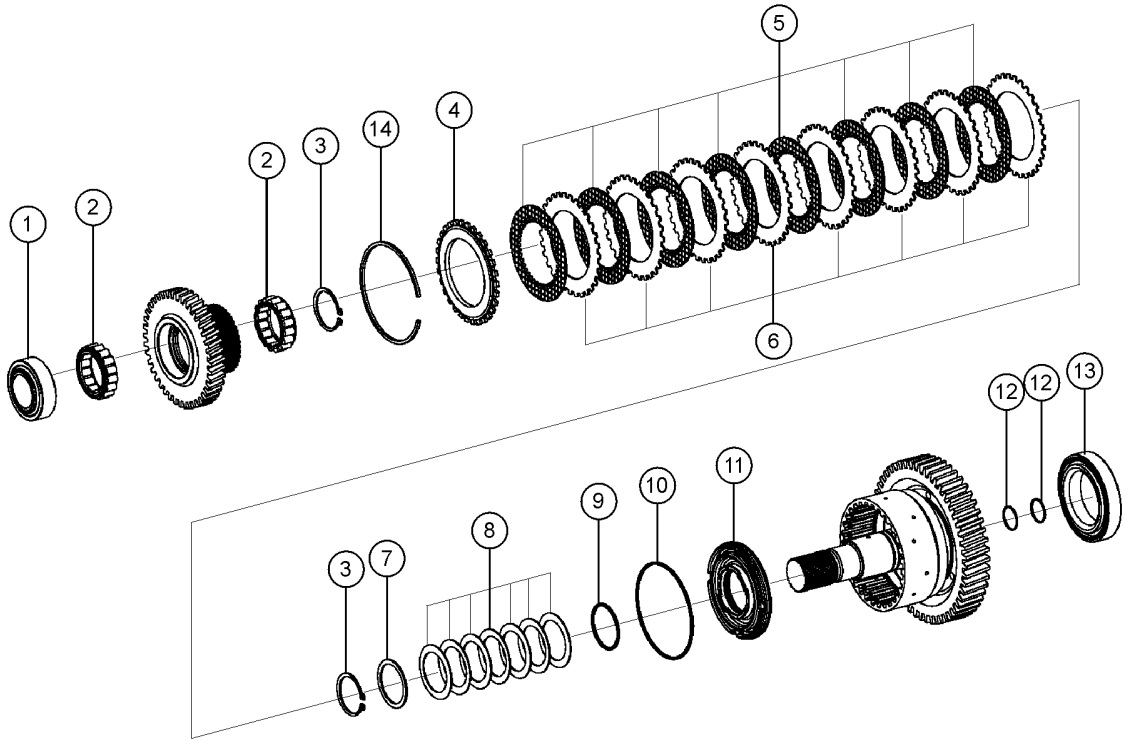

304.1 ZF Third Gear Assembly

Item	Part No.	Description	Qty.
1	1308792GT	TAPERED ROLLER BEARING 42,0X76,0X27,5	1
2	1308793GT	ROLLER BEARING	2
3	1308789GT	RETAINING RING 50X2	2
4	1308614GT	END SHIM	1
5	1308612GT	INNER CLUTCH DISK	8
6	1308613GT	OUTER CLUTCH DISK	8
7	1308788GT	WASHER A=2,00	1
8	1308787GT	CUP SPRING	7
9	1252273GT	O-RING	1
10	1252272GT	O-RING	1
11	1308605GT	PISTON KOLBEN M.EINGEPRESSTEM VENTIL	1
12	1252354GT	RECTANGULAR RING	2
13	1308790GT	ROLLER CAGE 50,000X68,000X18,800	1
14	1252329GT	SNAP RING h=2,50	1
14-	1252330GT	SNAP RING h=2,75	1
14-	1252331GT	SNAP RING h=3,00	1
14-	1252332GT	SNAP RING h=3,25	1
14-	1252333GT	SNAP RING h=3,50	1
14-	1252334GT	SNAP RING h=3,75	1
14-	1252335GT	SNAP RING h=4,00	1

305.1 ZF Fourth Gear Assembly

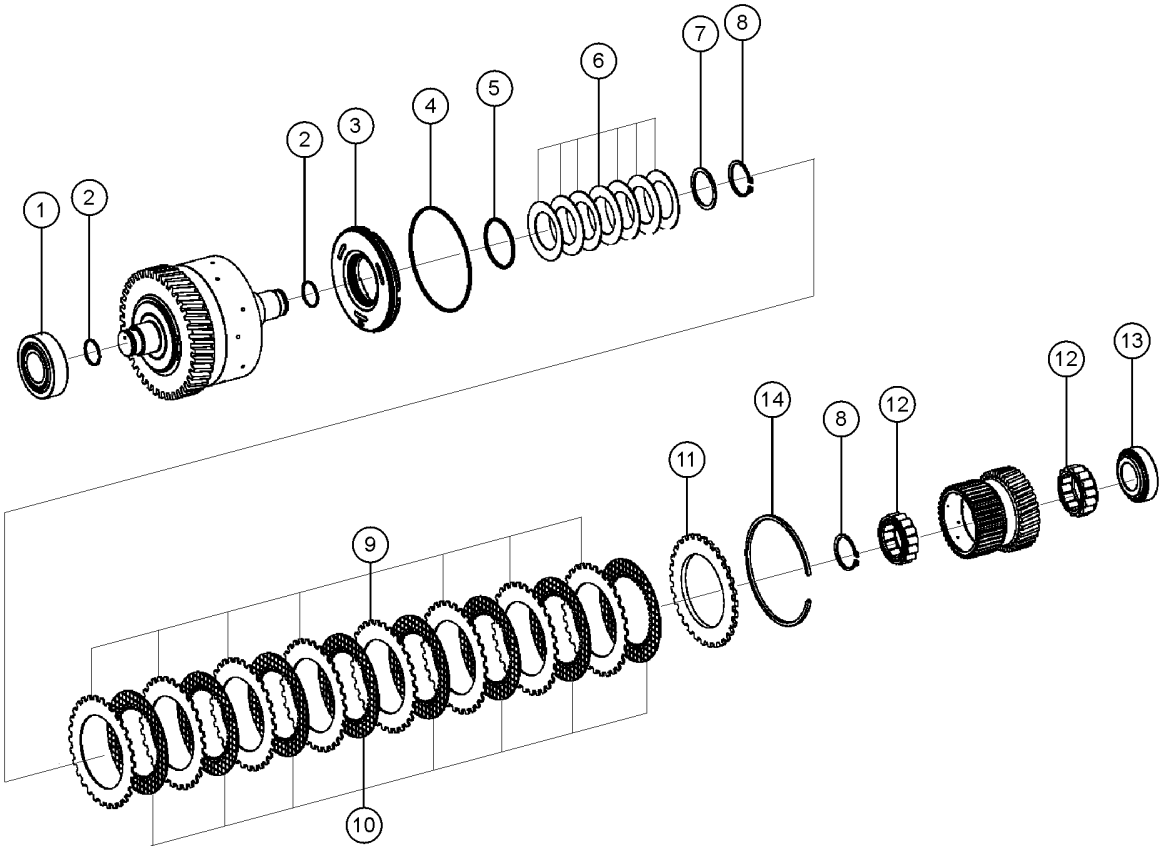

Item	Part No.	Description	Qty.
1	1252463GT	ROLLER BEARING	1
2	1252354GT	RECTANGULAR RING	2
3	1308605GT	PISTON KOLBEN M.EINGEPRESSTEM VENTIL	1
4	1252272GT	O-RING	1
5	1252273GT	O-RING	1
6	1308608GT	CUP SPRING 68,5X43,5X1,3	7
7	1308775GT	SHIM h=2,000	1
8	1308776GT	RETAINING RING 40X1,75	2
9	1308613GT	OUTER CLUTCH DISK	8
10	1308612GT	INNER CLUTCH DISK	8
11	1308614GT	END SHIM	1
12	1308777GT	SPHERICALLY SEATED BEARING	2
13	1308771GT	TAPER ROLLER BEARING 31,750X62,000X19,050	1
14	1252329GT	SNAP RING h=2,50	1
14-	1252330GT	SNAP RING h=2,75	1
14-	1252331GT	SNAP RING h=3,00	1
14-	1252332GT	SNAP RING h=3,25	1
14-	1252333GT	SNAP RING h=3,50	1
14-	1252334GT	SNAP RING h=3,75	1
14-	1252335GT	SNAP RING h=4,00	1

306.1 ZF Converter Housing Assembly

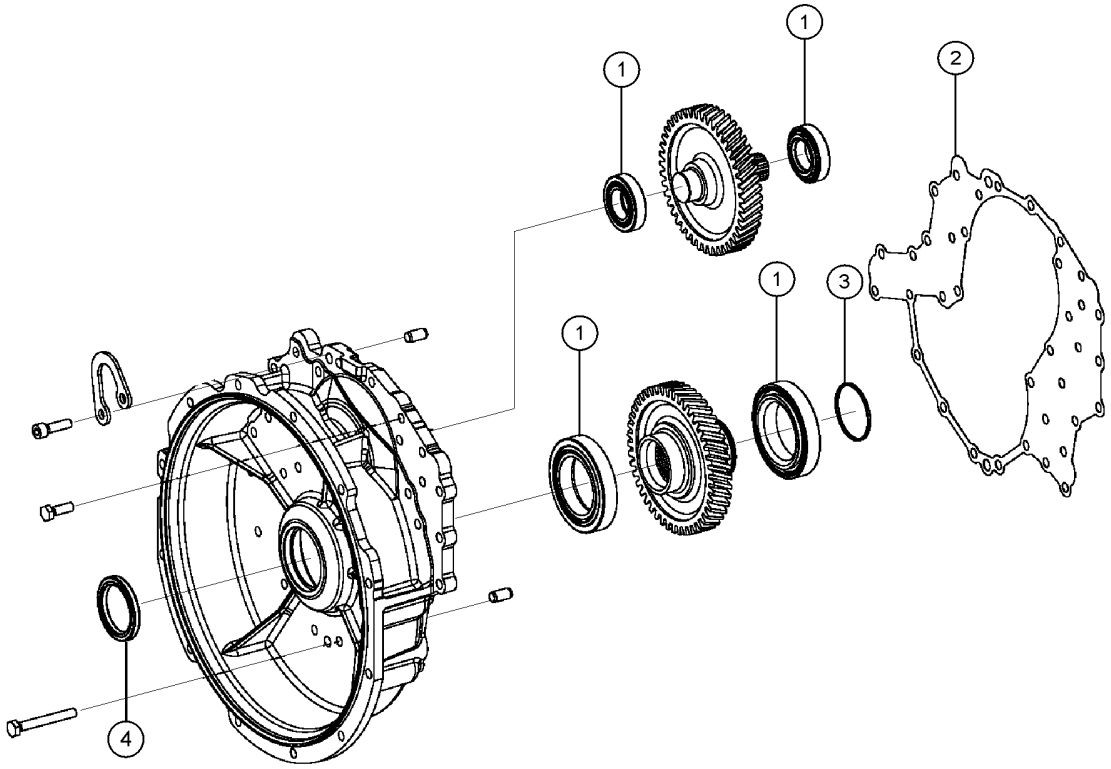

Item	*Part No.*	*Description*	*Qty.*
1	1252411GT	TA ROLLER BEARING	4
2	1308802GT	GASKET	1
3	1308798GT	RECTANGULAR RING 67,000X3,000	1
4	1308799GT	SHAFT SEAL 55X75X8 55X75X8	1

307.1 ZF Transmission Clutch Assembly

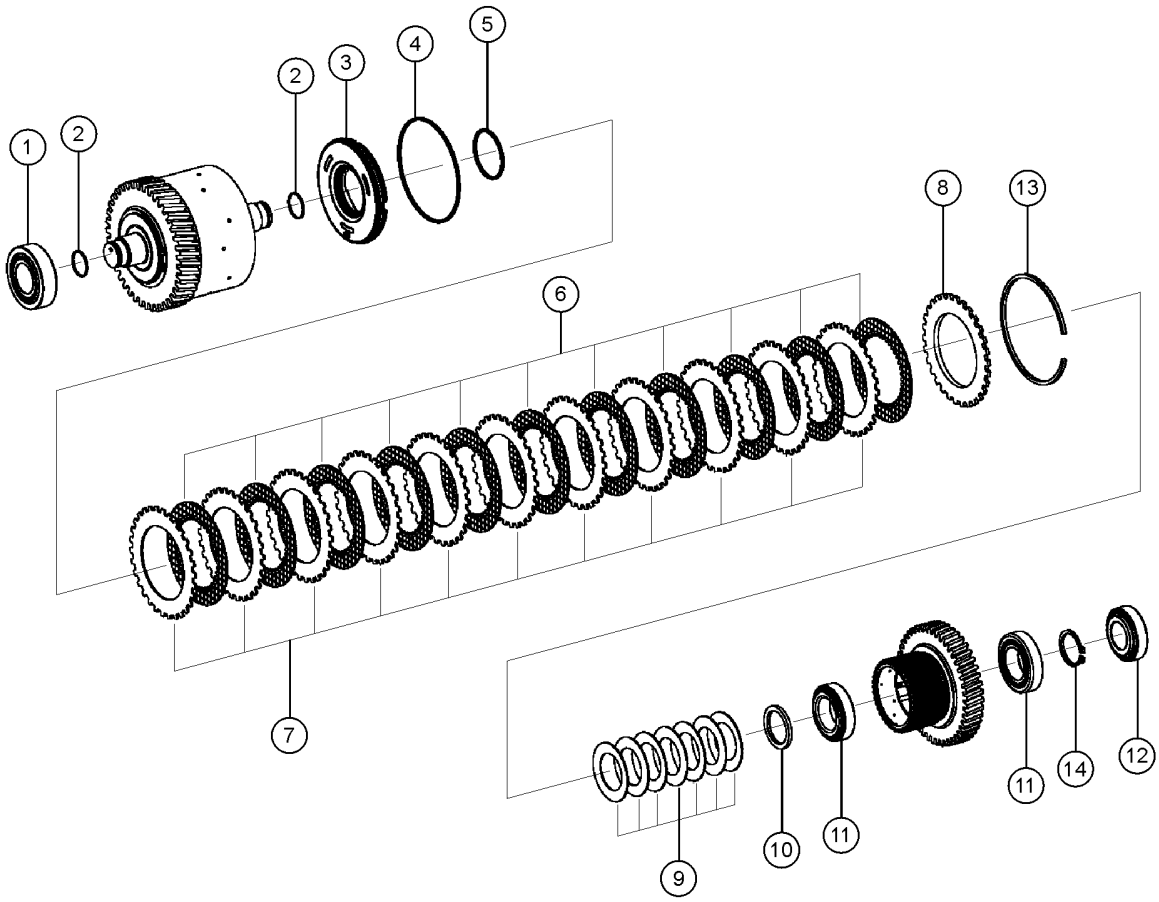

Item	Part No.	Description	Qty.
1	1252463GT	ROLLER BEARING	1
2	1252354GT	RECTANGULAR RING	2
3	1308605GT	PISTON KOLBEN M.EINGEPRESSTEM VENTIL	1
4	1252272GT	O-RING	1
5	1252273GT	O-RING	1
6	1308612GT	INNER CLUTCH DISK	11
7	1308613GT	OUTER CLUTCH DISK	11
8	1308614GT	END SHIM	1
9	1308608GT	CUP SPRING 68,5X43,5X1,3	7
10	1308609GT	SUPPORTING RING	1
11	1308610GT	TAPERED ROLLER BEARING	2
12	1308771GT	TAPER ROLLER BEARING 31,750X62,000X19,050	1
13	1252329GT	SNAP RING h=2,50	1
13-	1252330GT	SNAP RING h=2,75	1
13-	1252331GT	SNAP RING h=3,00	1
13-	1252332GT	SNAP RING h=3,25	1
13-	1252333GT	SNAP RING h=3,50	1
13	1252334GT	SNAP RING h=3,75	1
13-	1252335GT	SNAP RING h=4,00	1
14	1308757GT	RETAINING RING	1
14-	1252240GT	CIRCLIP	1
14-	1252239GT	CIRCLIP	1
14-	1252241GT	CIRCLIP	1
14-	1252242GT	CIRCLIP	1
14-	1252266GT	CIRCLIP	1
14-	1252337GT	CIRCLIP	1
14-	1252338GT	CIRCLIP	1
14-	1252339GT	CIRCLIP	1

307.1 ZF Transmission Clutch Assembly

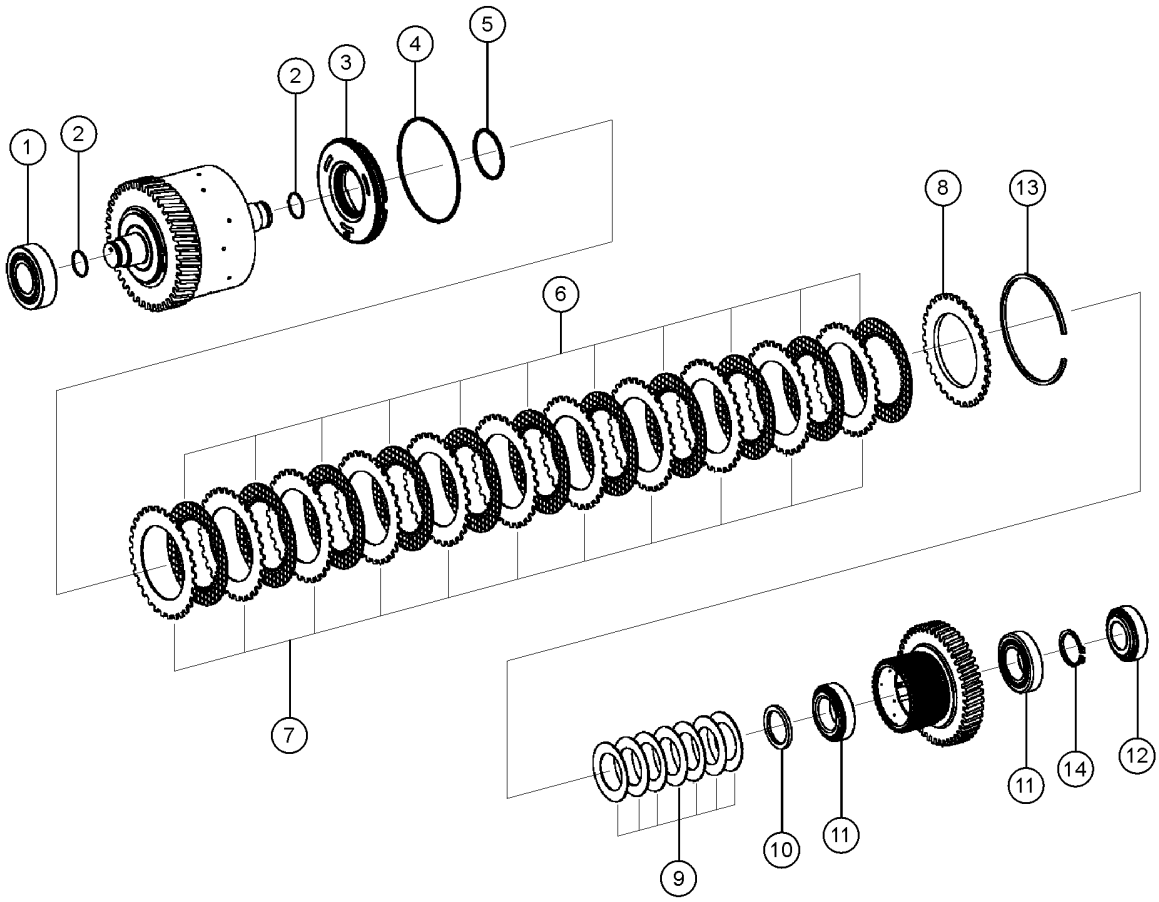

Item	*Part No.*	*Description*	*Qty.*
14-	1252340GT	CIRCLIP	1
14-	1252341GT	CIRCLIP	1
14-	1252342GT	CIRCLIP	1
14-	1252343GT	CIRCLIP	1

308.1 ZF Reverse Clutch Assembly

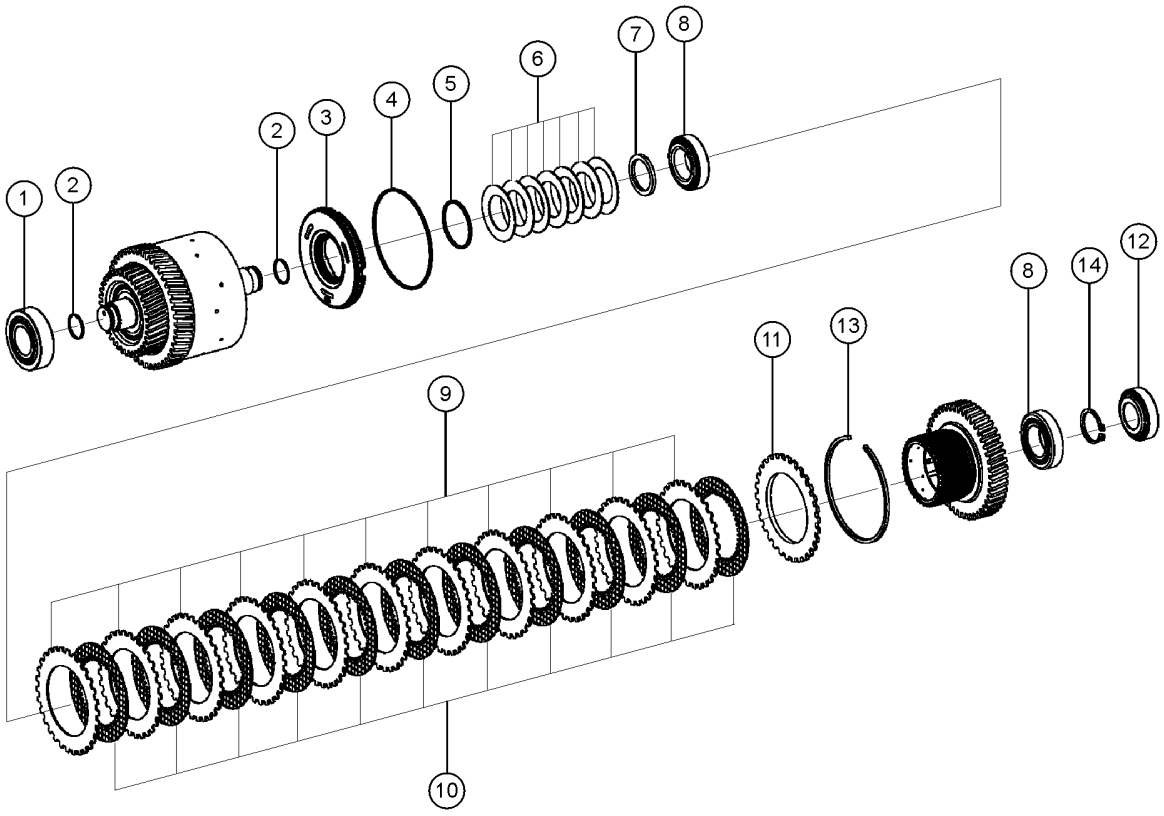

Item	Part No.	Description	Qty.
1	1252463GT	ROLLER BEARING	1
2	1252354GT	RECTANGULAR RING	2
3	1308605GT	PISTON KOLBEN M.EINGEPRESSTEM VENTIL	1
4	1252272GT	O-RING	1
5	1252273GT	O-RING	1
6	1308608GT	CUP SPRING 68,5X43,5X1,3	7
7	1308609GT	SUPPORTING RING	1
8	1308610GT	TAPERED ROLLER BEARING	2
9	1308613GT	OUTER CLUTCH DISK	11
10	1308612GT	INNER CLUTCH DISK	11
11	1308614GT	END SHIM	1
12	1308771GT	TAPER ROLLER BEARING 31,750X62,000X19,050	1
13	1252329GT	SNAP RING h=2,50	1
13-	1252330GT	SNAP RING h=2,75	
13-	1252331GT	SNAP RING h=3,00	1
13-	1252332GT	SNAP RING h=3,25	1
13-	1252333GT	SNAP RING h=3,50	1
13-	1252334GT	SNAP RING h=3,75	1
13-	1252335GT	SNAP RING h=4,00	1
14	1308757GT	RETAINING RING	1
14-	1252240GT	CIRCLIP	1
14-	1252239GT	CIRCLIP	1
14-	1252241GT	CIRCLIP	1
14-	1252242GT	CIRCLIP	1
14-	1252266GT	CIRCLIP	1
14-	1252337GT	CIRCLIP	1
14-	1252338GT	CIRCLIP	1
14-	1252339GT	CIRCLIP	1

308.1 ZF Reverse Clutch Assembly

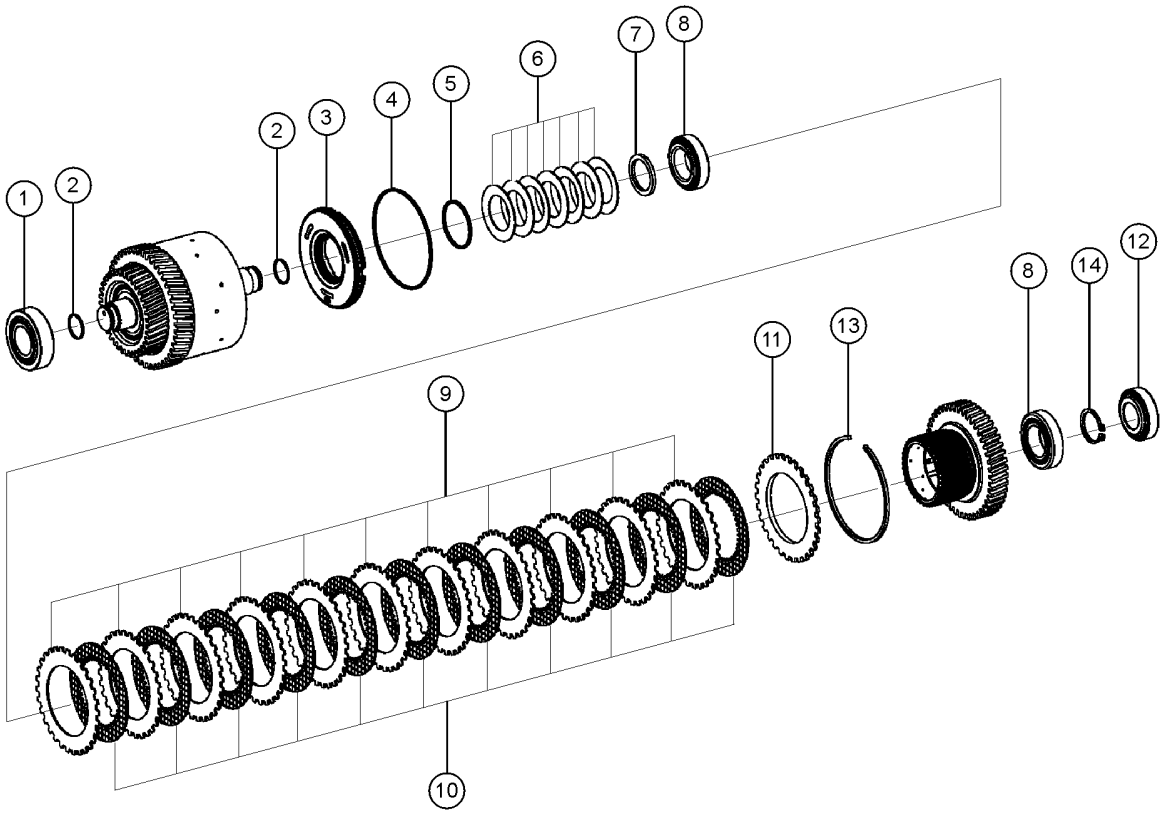

Item	Part No.	Description	Qty.
14-	1252340GT	CIRCLIP	1
14-	1252341GT	CIRCLIP	1
14-	1252342GT	CIRCLIP	1
14-	1252343GT	CIRCLIP	1

309.1 ZF Pump Assembly

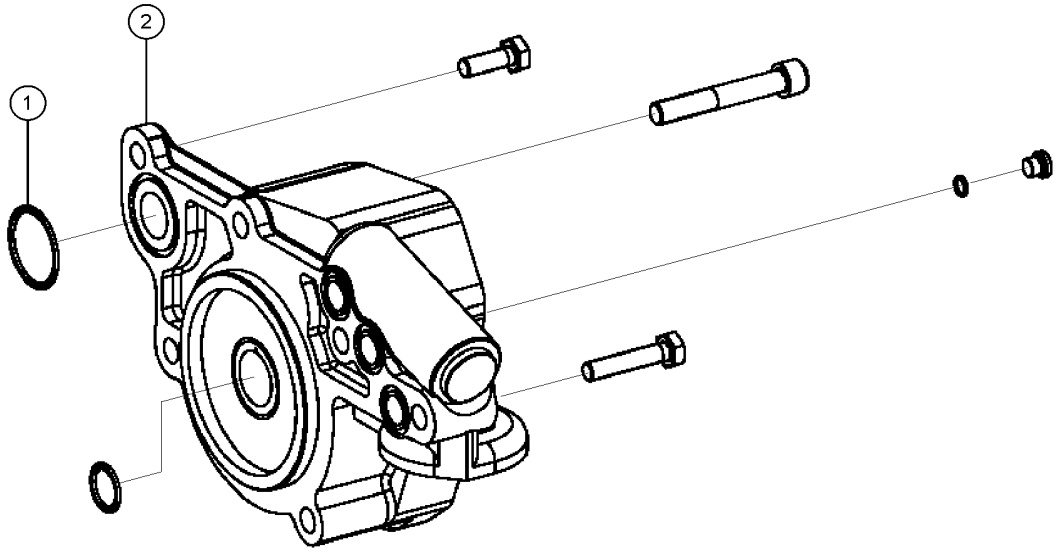

309.1 ZF Pump Assembly

Item	*Part No.*	*Description*	*Qty.*
1	1252182GT	O-RING	1
2	1308849GT	PUMP	1

310.1 ZF Valve Assembly

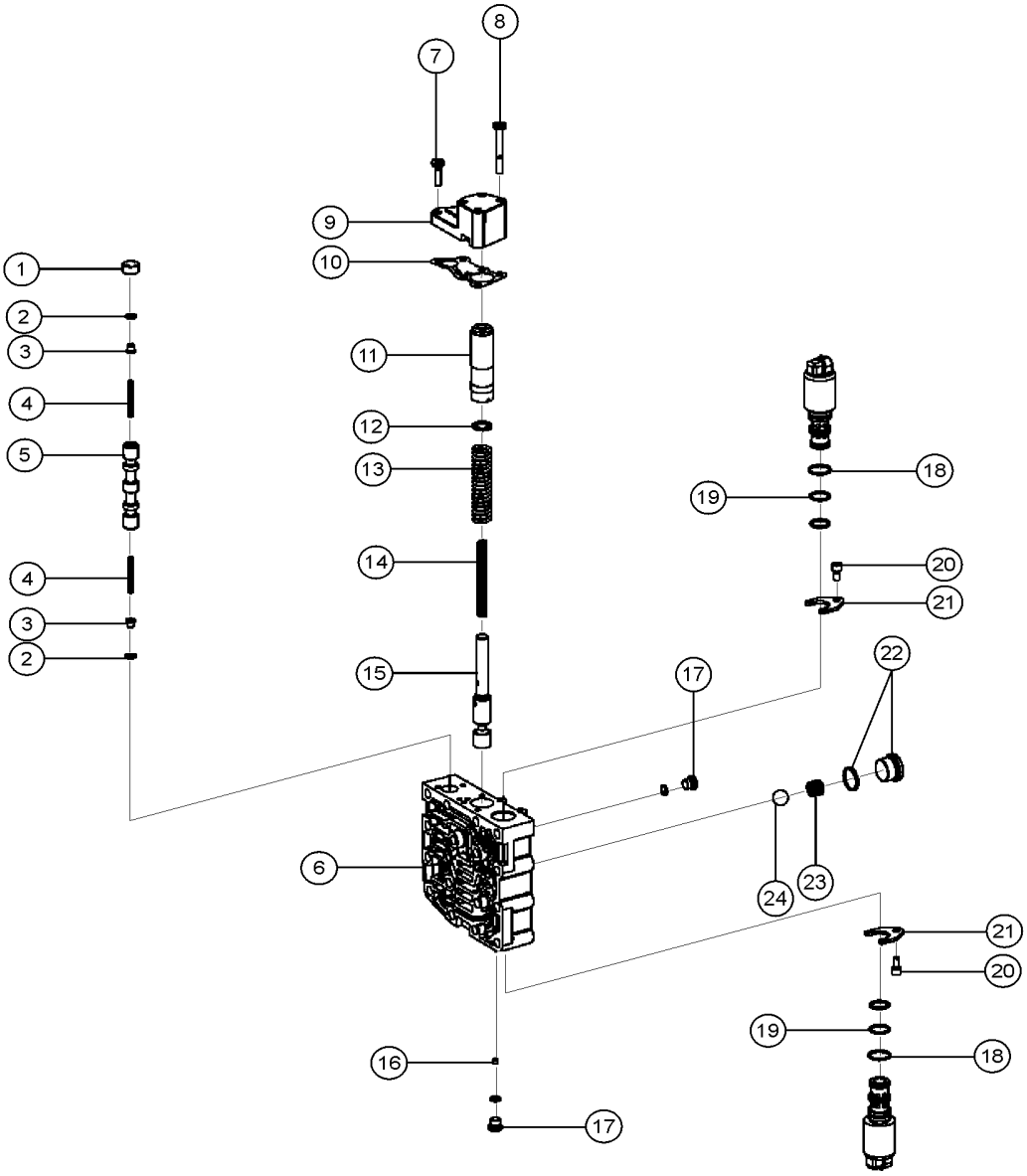

310.1 ZF Valve Assembly

Item	Part No.	Description	Qty.
1	1308836GT	SPACER A=8,00	1
2	1308835GT	SNAP RING	2
3	1308834GT	SPRING SLEEVE	2
4	1308833GT	COMPRESSION SPRING	2
5	1308832GT	PISTON	1
6	1308820GT	VALVE HOUSING	1
7	1308842GT	TORX SCREW M6x23	2
8	1308843GT	TORX SCREW M6X52	4
9	1308841GT	COVER	1
10	1308840GT	GASKET	1
11	1308829GT	PISTON	1
12	1308828GT	WASHER S=1,0	1
13	1308822GT	COMPRESSION SPRING	1
14	1308823GT	COMPRESSION SPRING	1
15	1308821GT	CONTROL PISTON	1
16	1308830GT	NOZZLE M5x5*D=1,150	1
17	1252373GT	SCREW PLUG	2
18	1308812GT	O-RING 20X2	2
19	1308813GT	O-RING 18X2	2
20	1308818GT	CAP SCREW M6X12	2
21	1308816GT	BRACKET	2
22	1308837GT	SCREW PLUG M24X1,5	1
23	1308845GT	COMPRESSION SPRING	1
24	1308844GT	BALL 16	1

311.1 ZF Housing Assembly

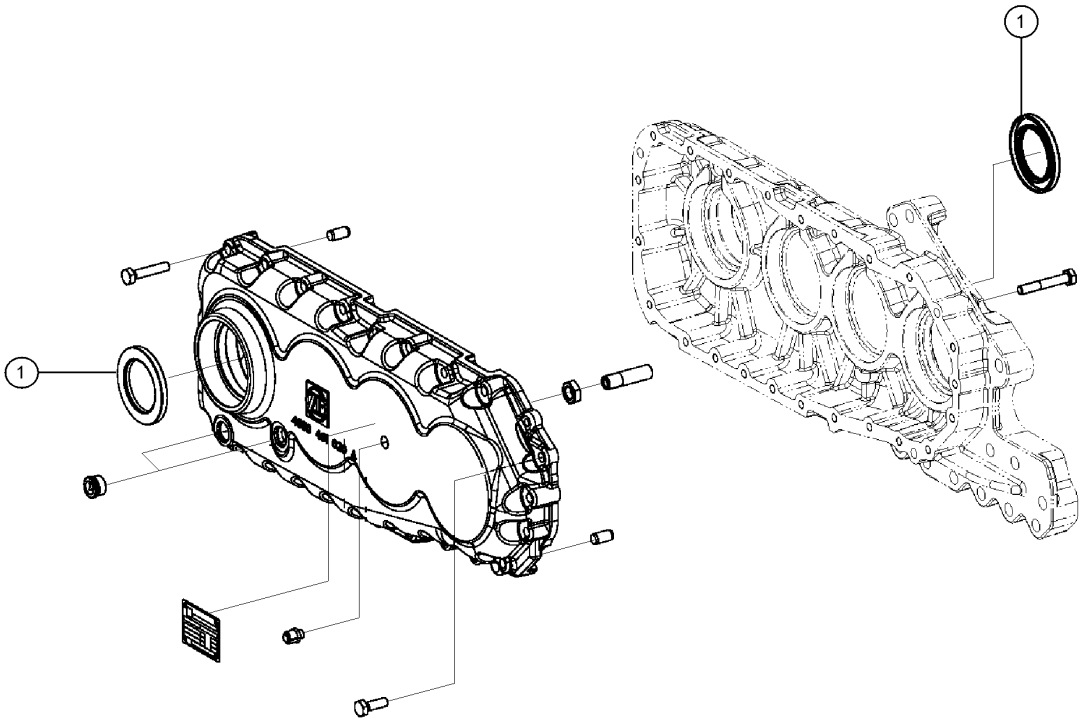

311.1 ZF Housing Assembly

Item	*Part No.*	*Description*	*Qty.*
1	1308795GT	SHAFT SEAL 60,000X90,000X8,000	3

312.1 ZF Control Unit

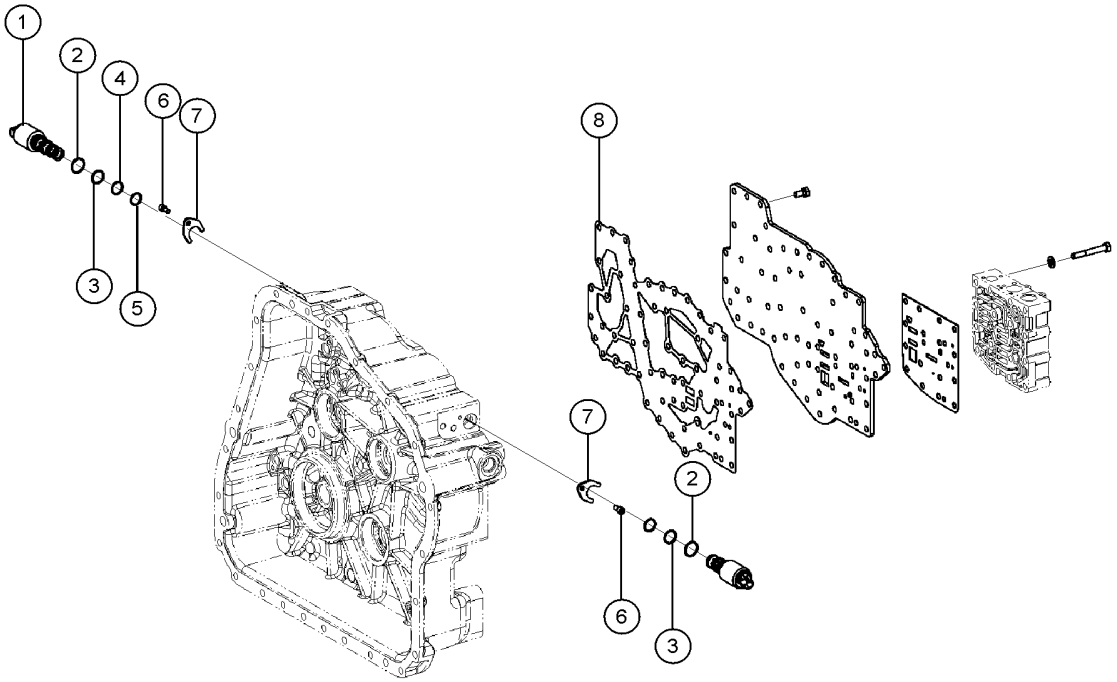

312.1 ZF Control Unit

Item	Part No.	Description	Qty.
1	1308811GT	SOLENOID VALVE	3
2	1308812GT	O-RING 20X2	4
3	1308813GT	O-RING 18X2	4
4	1308814GT	O-RING 16X2	3
5	1308815GT	O-RING 15X2	3
6	1308818GT	CAP SCREW M6X12	4
7	1308816GT	BRACKET	4
8	1308805GT	GASKET	1

313.1 ZF Engine Connection

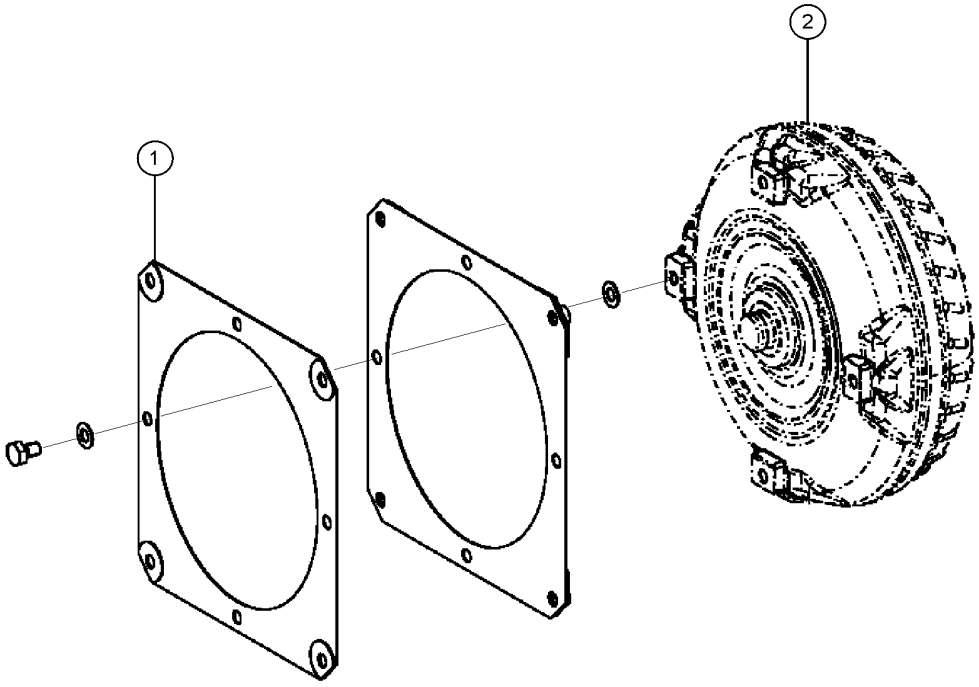

Item	*Part No.*	*Description*	*Qty.*
1	1308541GT	DIAPHRAGM A=333,4	1
2	1308544GT	CONVERTER	1

314.1 ZF Output Shaft Assembly

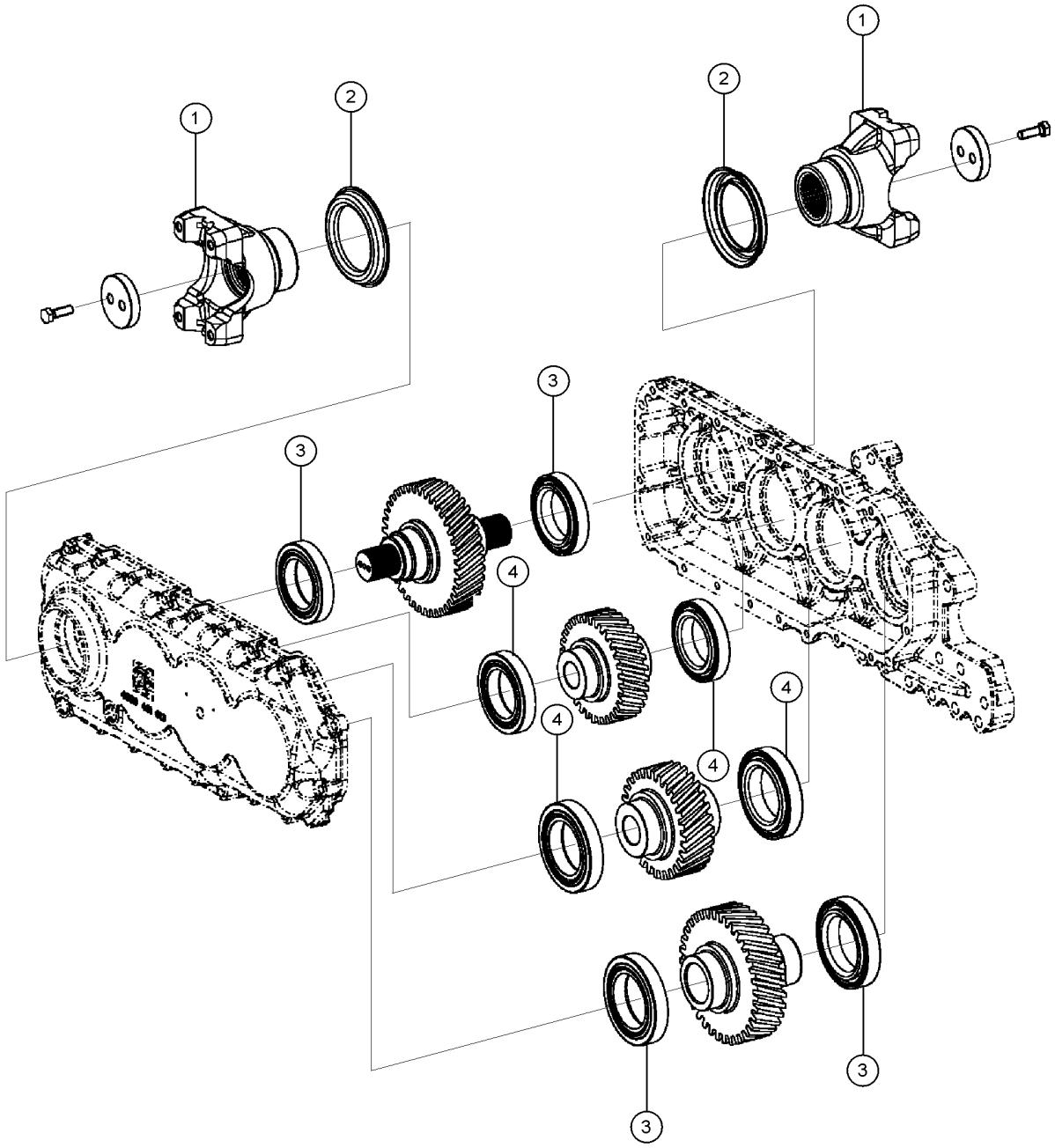

Item	*Part No.*	*Description*	*Qty.*
1	1252169GT	OUTPUT FLANGE	2
2	1252170GT	SCREEN SHEET	2
3	1308793GT	ROLLER BEARING	4
4	1308867GT	TAPERED ROLLER BEARING 66,675X110,000X21,996	4

315.1 CVT Transmission Manifold Assy

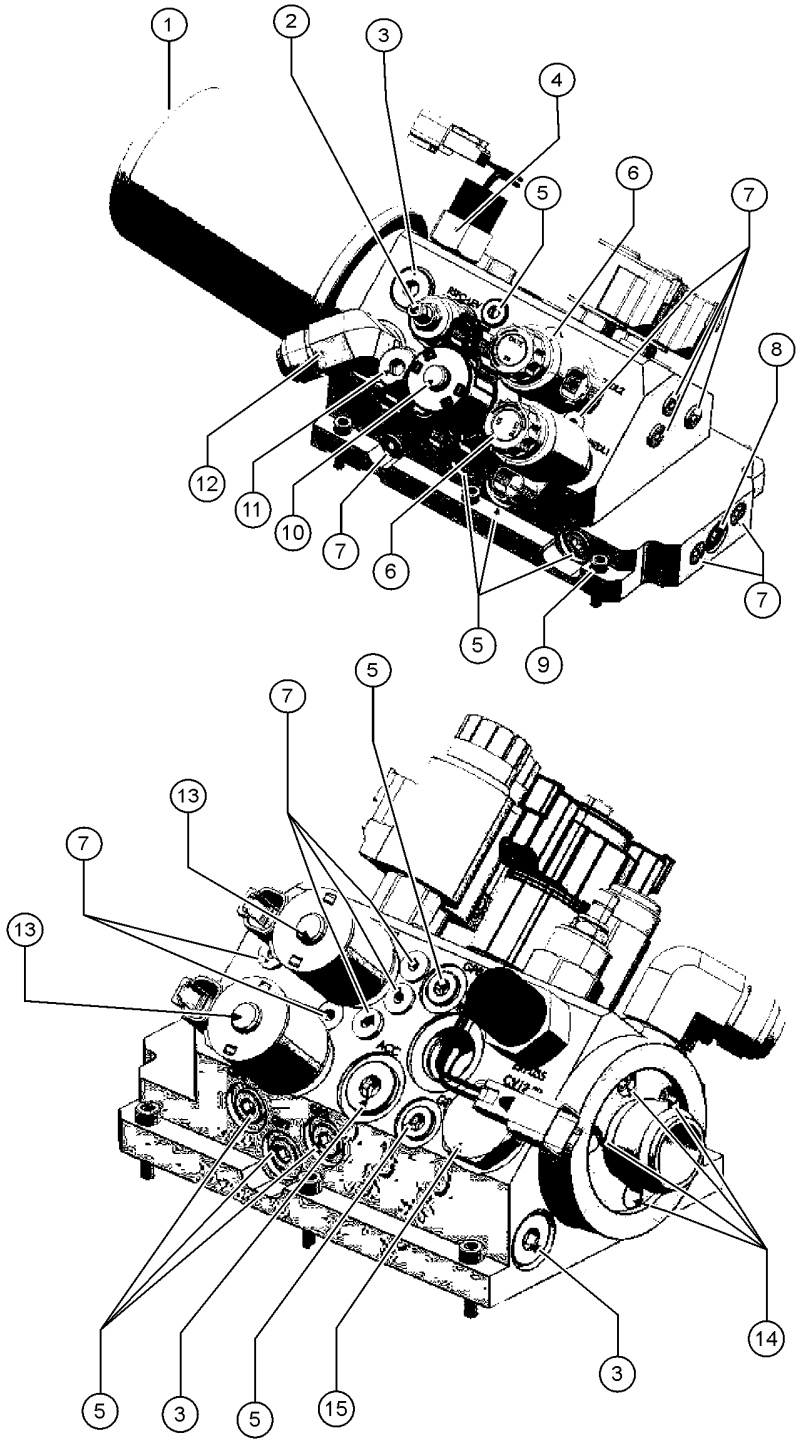

315.1 CVT Transmission Manifold Assy

Item	Part No.	Description	Qty.
1	1309333GT	OIL FILTER 1-3/8" - 2	1
2	1309358GT	SEQUENCE VALVE 1" - 14	1
3	1309363GT	HEX PLUG SAE-ORB 3/4-16	4
4	1309305GT	LOW OIL PRESSURE SWITCH	1
5	1309361GT	HEX PLUG SAE-ORB 7/16-20	9
6	1309308GT	PROPORTIONAL VALVE M20 X 1.5	2
7	1309362GT	HEX PLUG SAE-ORB 5/16-24	21
8	1309364GT	HEX PLUG SAE-ORB 9/16-18	1
9	1309338GT	SHCS - M6 X 1.0 X 25.0MM	6
10	1309307GT	PROPORTIONAL VALVE 3/4" - 16	1
11	1309360GT	RELIEF VALVE 7/8" - 14	1
12	1309353GT	FITTING	1
13	1309306GT	SOLENOID VALVE 3/4" - 16	2
14	1309334GT	SHCS - M5 X 0.8 X 12.0MM	4
15	1309359GT	CHECK VALVE 1-1/16"-12	1

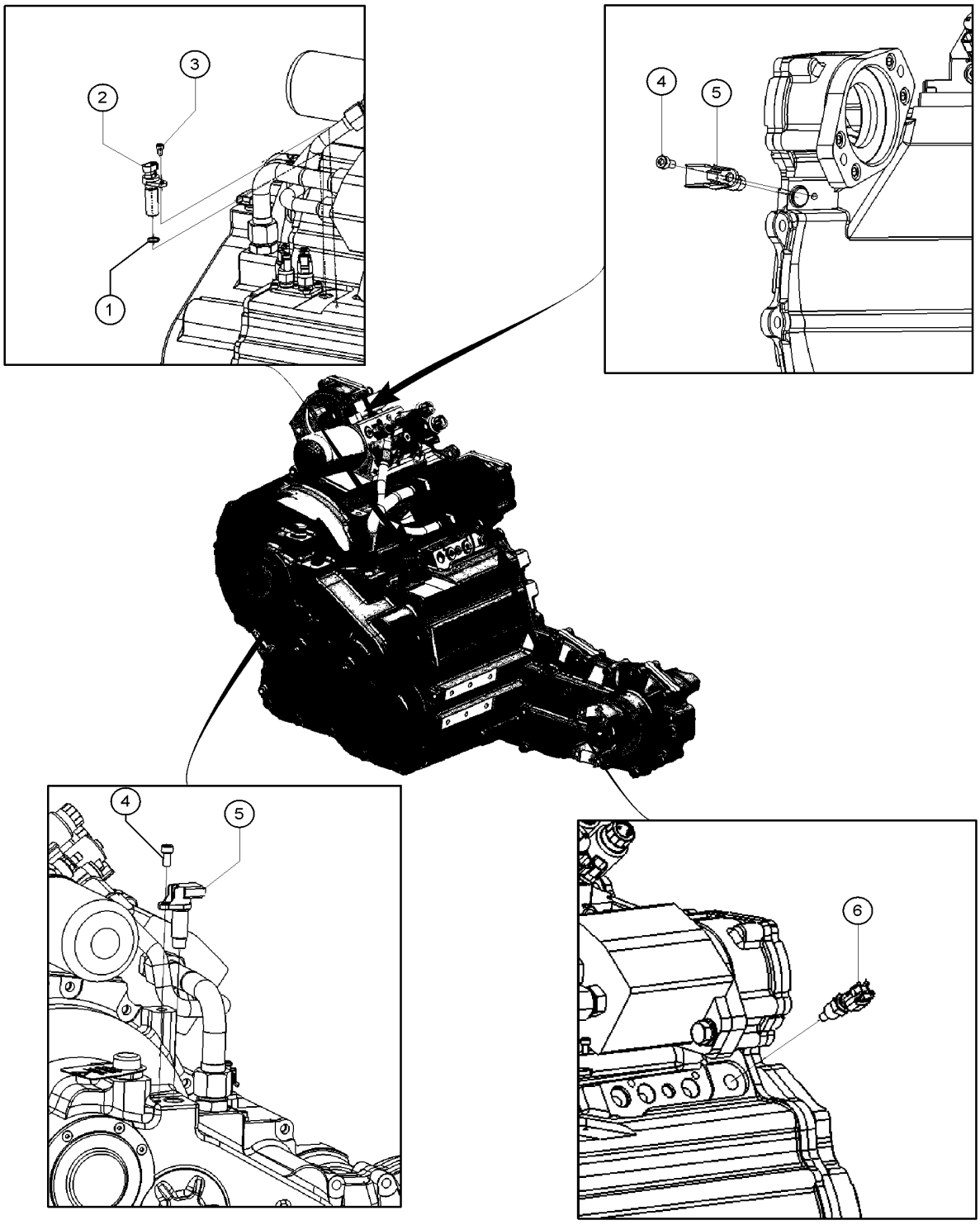
1
2
3
4
5
4
5
6

Item	*Part No.*	*Description*	*Qty.*
1	1309300GT	O-RING	1
2	1309301GT	SENSOR	2
3	1309302GT	SCREW M6 X 1	1
4	1309304GT	SCREW M8 X 1,25	2
5	1309303GT	SENSOR	2
6	1309296GT	SENSOR	2

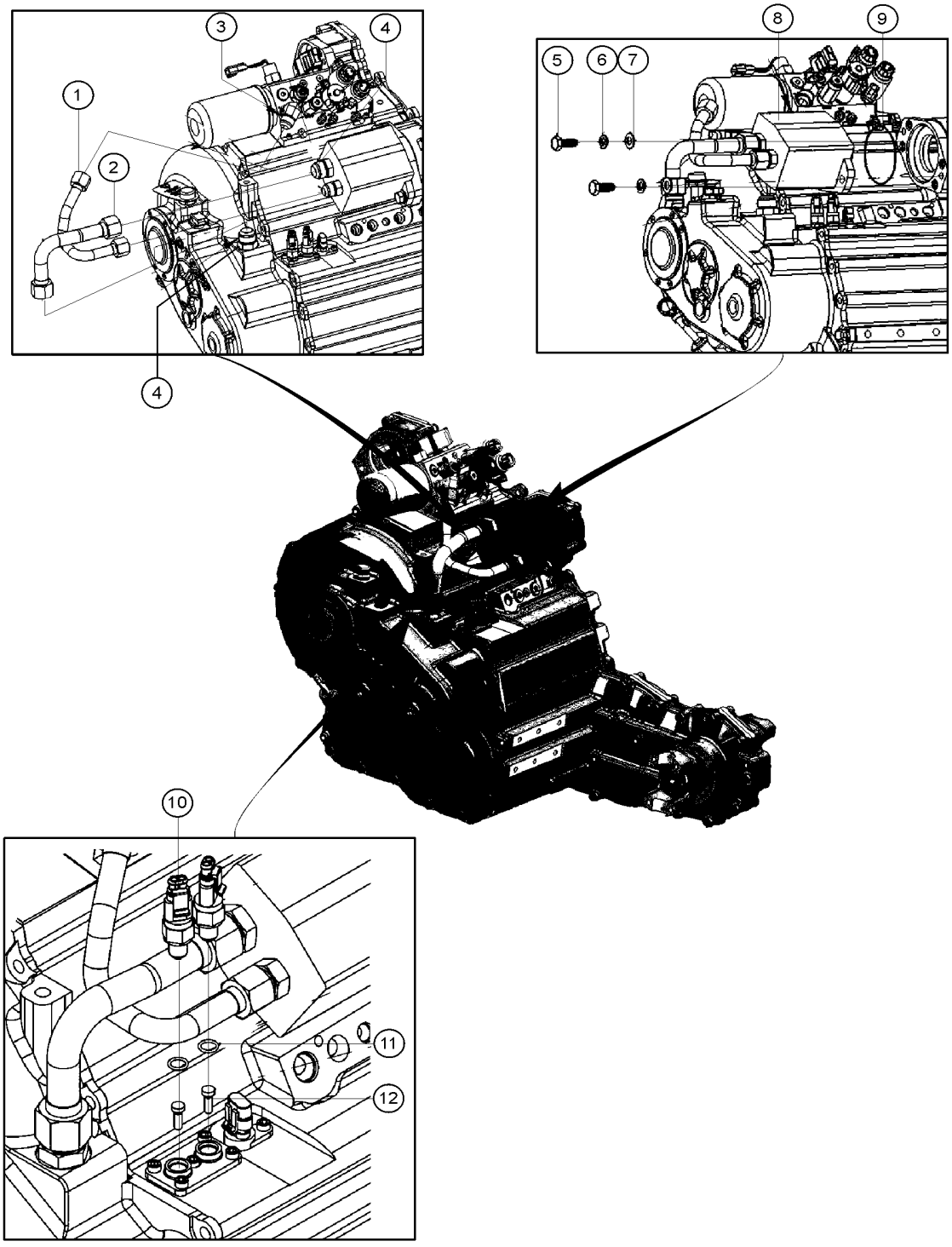
1
2
3
4
4
5
6
7
8
9
10
11
12

Item	*Part No.*	*Description*	*Qty.*
1	1309352GT	PUMP PRESSURE TUBING	2
2	1309350GT	PUMP SUCTION TUBING	1
3	1309353GT	FITTING	1
4	1309354GT	FITTING	2
5	1309347GT	SCREWS	2
6	1309348GT	WASHER	2
7	1309349GT	WASHER	2
8	1309345GT	OIL PUMP	1
9	1309346GT	O-RING	1
10	1309357GT	LIMIT SWITCH	2
11	1309356GT	O-RING	2
12	1309355GT	PLUNGER	2

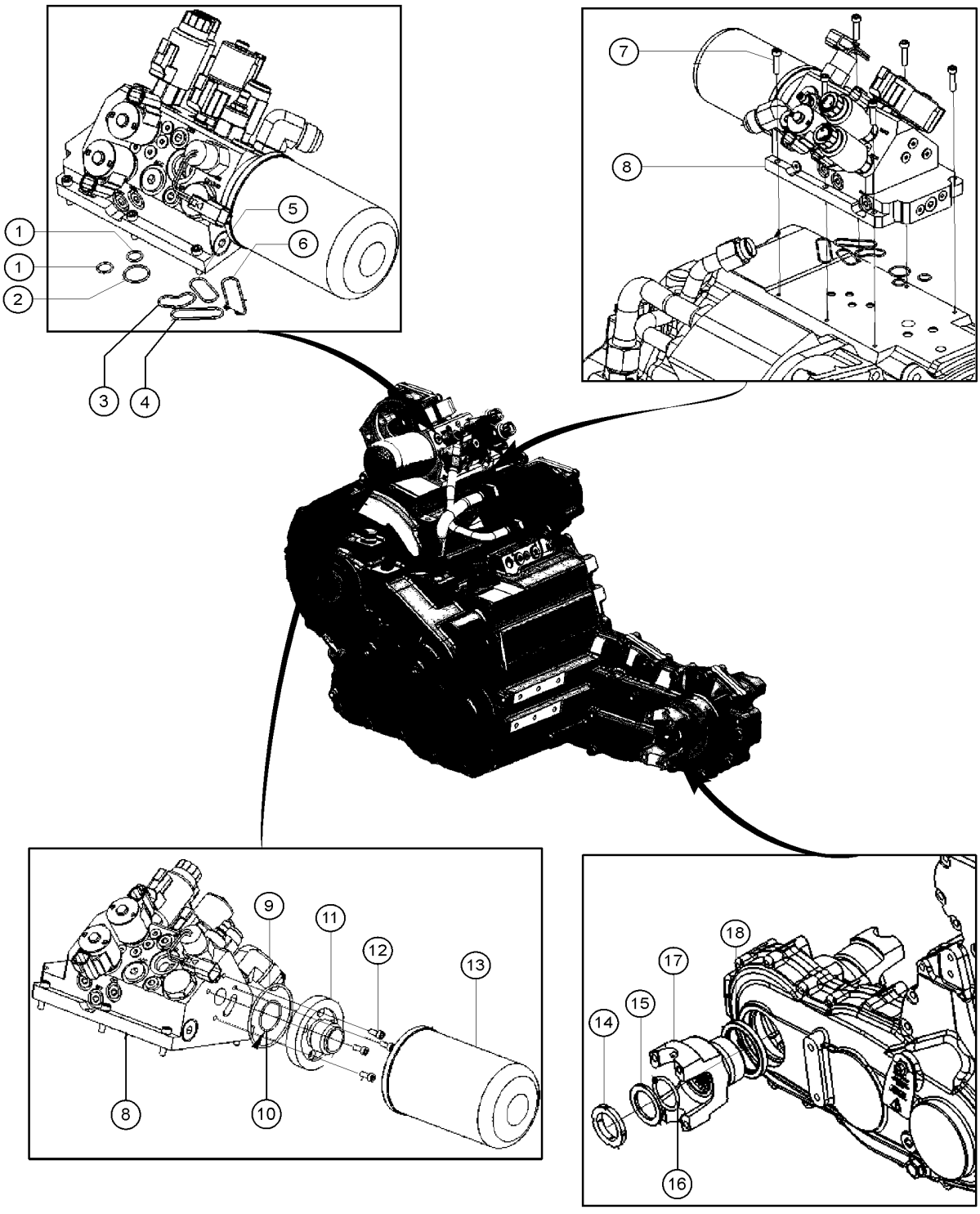
1
1
2
3
4
5
6
7
8
8
9
10
11
12
13
14
15
16
17
18

Item	Part No.	Description	Qty.
1	1309339GT	O-RING	1
2	1309340GT	O-RING	1
3	1309344GT	O-RING	1
4	1309342GT	O-RING	1
5	1309343GT	O-RING	1
6	1309341GT	O-RING	1
7	1309338GT	SHCS - M6 X 1.0 X 25.0MM	6
8	1309337GT	MANIFOLD	1
9	1309336GT	O-RING	1
10	1309335GT	O-RING	1
11	1309332GT	FILTER ADAPTER	1
12	1309334GT	SHCS - M5 X 0.8 X 12.0MM	4
13	1309333GT	OIL FILTER 1-3/8" - 2	1
14	1309318GT	YOKE LOCKING NUT	2
15	1309317GT	YOKE WASHER	2
16	1309316GT	YOKE O-RING	2
17	1309315GT	YOKE	2
18	1309319GT	SHAFT SEAL	1

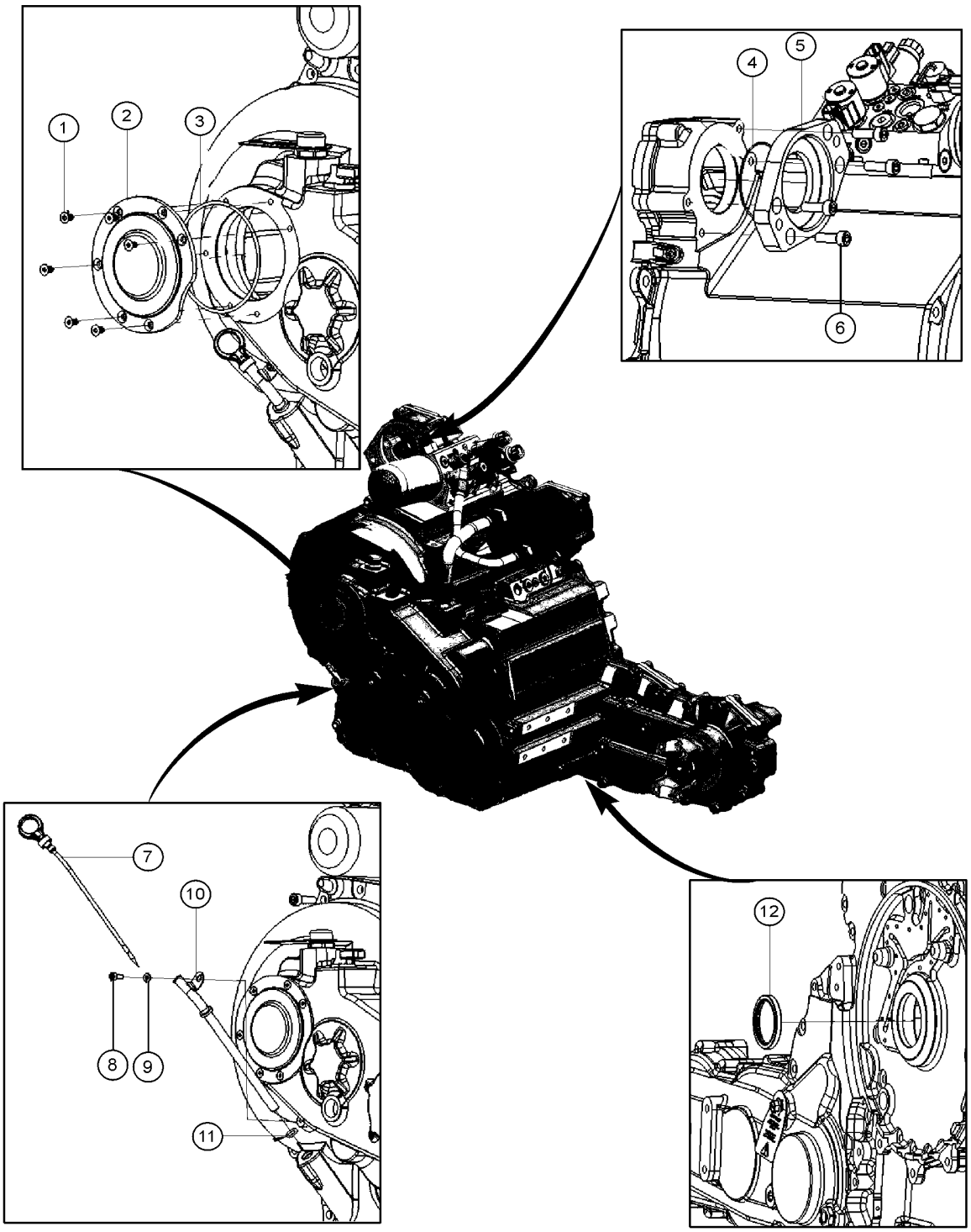
1
2
3
4
5
6
7
8
9
10
11
12

Item	Part No.	Description	Qty.
1	1309323GT	SCREWS	6
2	1309322GT	REAR CAP	1
3	1309321GT	O-RING	1
4	1309324GT	O-RING	1
5	1309325GT	PUMP PAD ADAPTOR	1
6	1309326GT	SCREWS	4
7	1309331GT	DIPSTICK	1
8	1309330GT	SCREW	1
9	1309329GT	WASHER	1
10	1309328GT	OIL TUBE	1
11	1309327GT	O-RING	1
12	1309320GT	SEAL	1

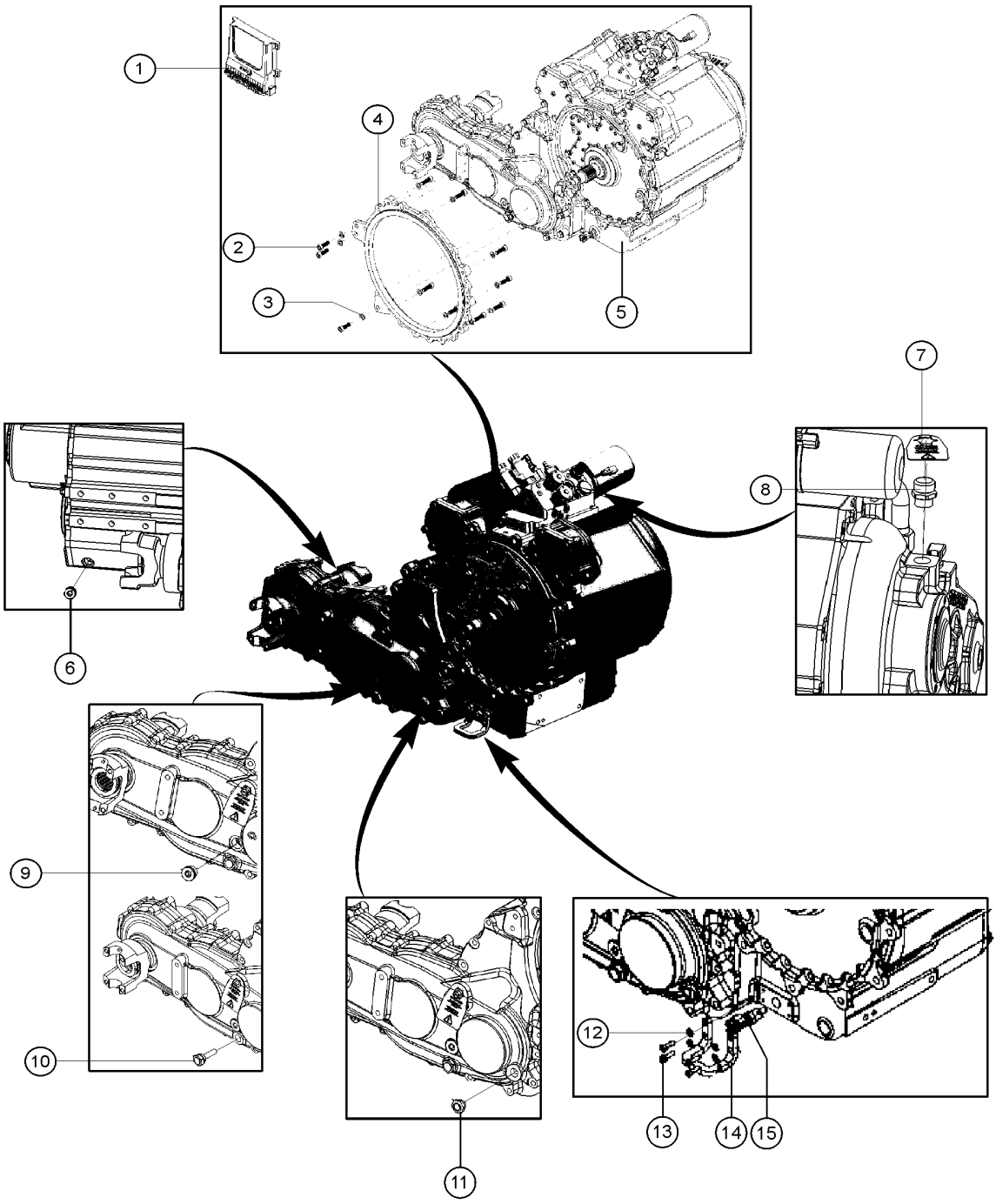
1
2
3
4
5
6
7
8
9
10
11
12
13
14
15

Item	Part No.	Description	Qty.
1	1309371GT	TCU HARDWARE	1
2	1309372GT	SHCS SCREWS	11
3	1309373GT	LOCK WASHER	11
4	1309370GT	ENGINE MOUNT ADAPTER PLATE	1
5	1309369GT	ECGENIUS 150 ASM	1
6	1309311GT	OIL MAGNET DRAIN PLUG	1
7	1309310GT	TAG	1
8	1309309GT	BREATHER	1
9	1309312GT	MAGNET OIL FILL PLUG M26 X 1,5	1
10	1309313GT	MAGNETIC FILTER ROD	1
11	1309314GT	SIGHT GLASS	1
12	1309298GT	WASHERS	4
13	1309299GT	SCREWS	4
14	1309297GT	BRACKET	1
15	1309296GT	SENSOR	1

321.1 Dana Converter housing

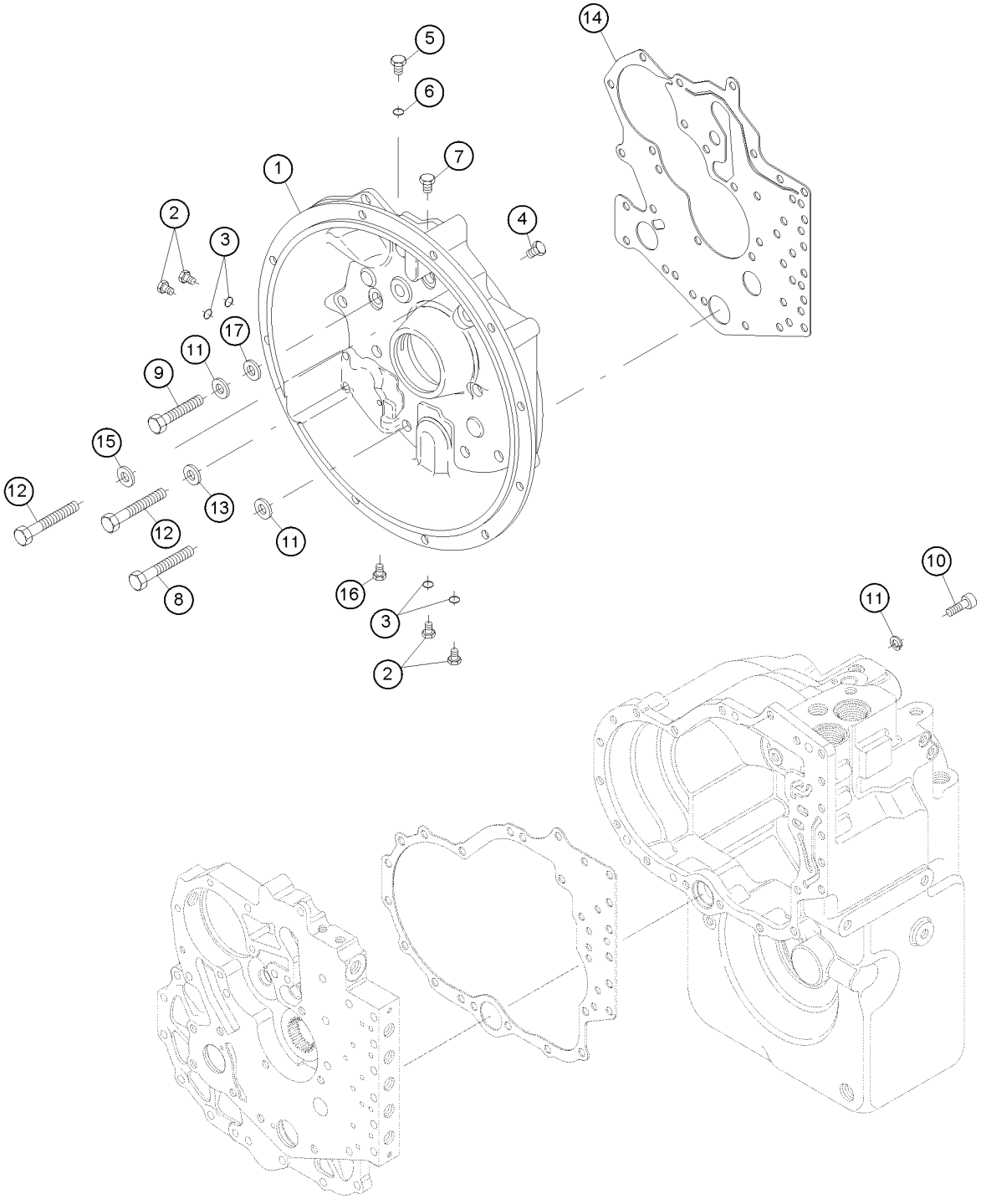

321.1 Dana Converter housing

Item	*Part No.*	*Description*	*Qty.*
1		CONVERTER HOUSING	1
2	7-126-385GT	PLUG includes item 3	5
3			
4	7-126-387GT	PLUG	1
5			
6			
7	7-126-04GT	PIPE PLUG	1
8	7-126-388GT	BOLT	6
9	7-126-389GT	BOLT	16
10	220083GT	BOLT	1
11	7-126-391GT	LOCKWASHER	23
12			
13			
14	7-126-355GT	HOUSING GASKET	1
15			
16	7-126-688GT	PLUG	1

322.1 Dana Transmission Case

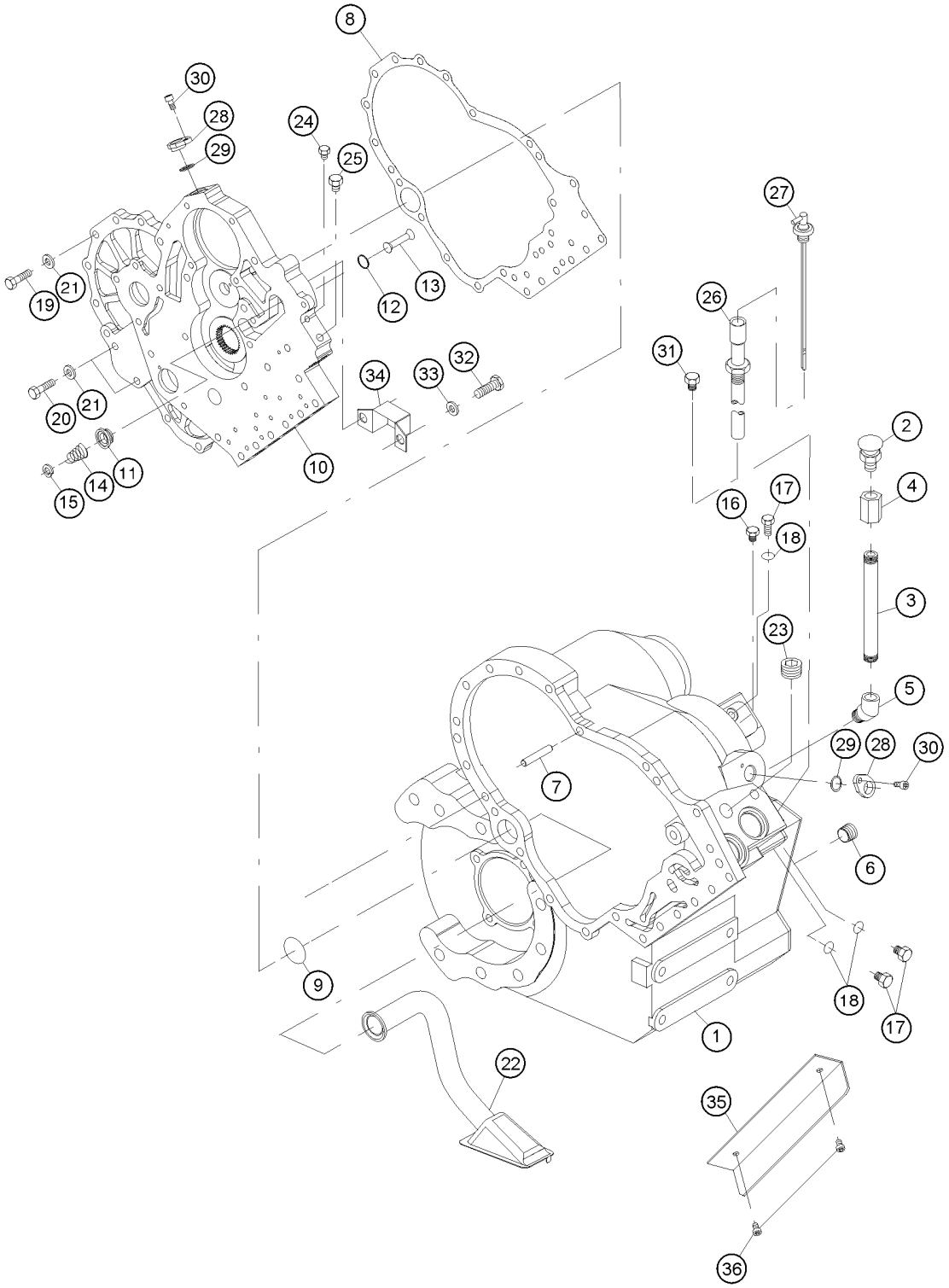

322.1 Dana Transmission Case

Item	Part No.	Description	Qty.
1	220102GT	HOUSING	1
2	7-126-05GT	BREATHER / AIR	1
3	220103GT	ADAPTER	1
4	220104GT	ADAPTER	1
5	220105GT	ADAPTER	1
6	7-126-33GT	PLUG,MAGNETIC DRAIN	2
7	220106GT	DOWEL	2
8	7-126-357GT	GASKET / PLATE TO TRANS.	1
9	7-126-359GT	SEAL / OIL SUPPLY TUBE	1
10	220107GT	INTERMEDIATE COVER	1
11	7-126-399GT	TRANSMISSION,SPRING,SEAT	1
12	7-126-400GT	SNAP RING	1
13	7-126-401GT	POPPET	1
14	7-126-402GT	SPRING	1
15	7-126-403GT	Washer	1
16	7-126-387GT	PLUG	2
17	7-126-30GT	PLUG no longer available	3
19	220112GT	BOLT	7
20	220113GT	BOLT	2
21	7-126-391GT	LOCKWASHER	9
22	220108GT	TUBE	1
23	7-126-265GT	PIPE PLUG	1
25	7-126-04GT	PIPE PLUG	1
26	220109GT	TUBE	1
27	220110GT	DIPSTICK	1
28	7-126-404GT	PLUG,SPEED SENSOR PORT	2
29	7-126-356GT	O-RING,SPEED SENSOR	2
30	7-126-405GT	SCREW,SPEED SENSOR	2

322.1 Dana Transmission Case

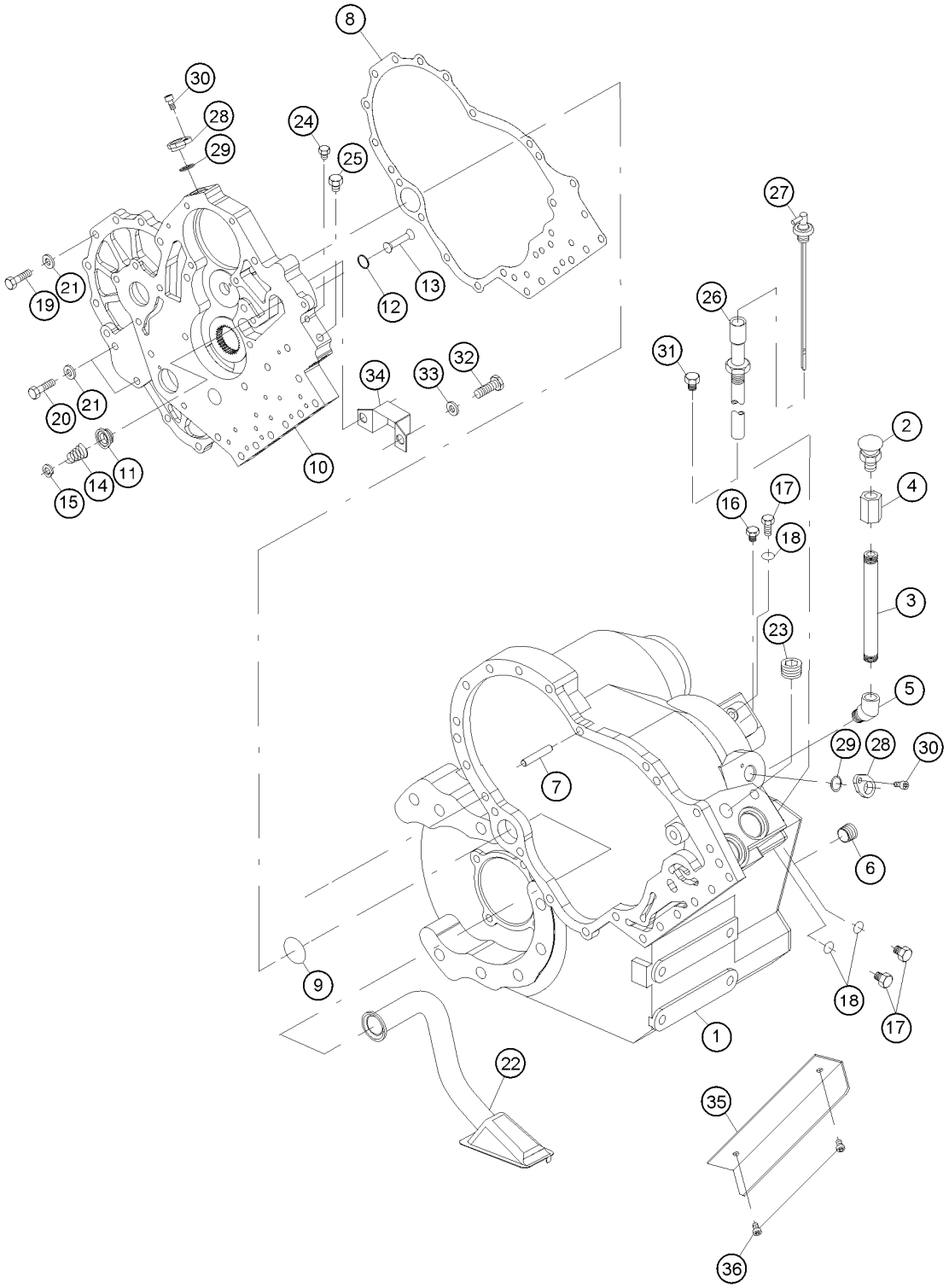

Item	Part No.	Description	Qty.
32	220114GT	BOLT	2
33	7-126-409GT	WASHER	2
34	220115GT	GUARD	1
35	220116GT	COVER PLATE	1
36	220117GT	BOLT	2

323.1 Dana Torque converter

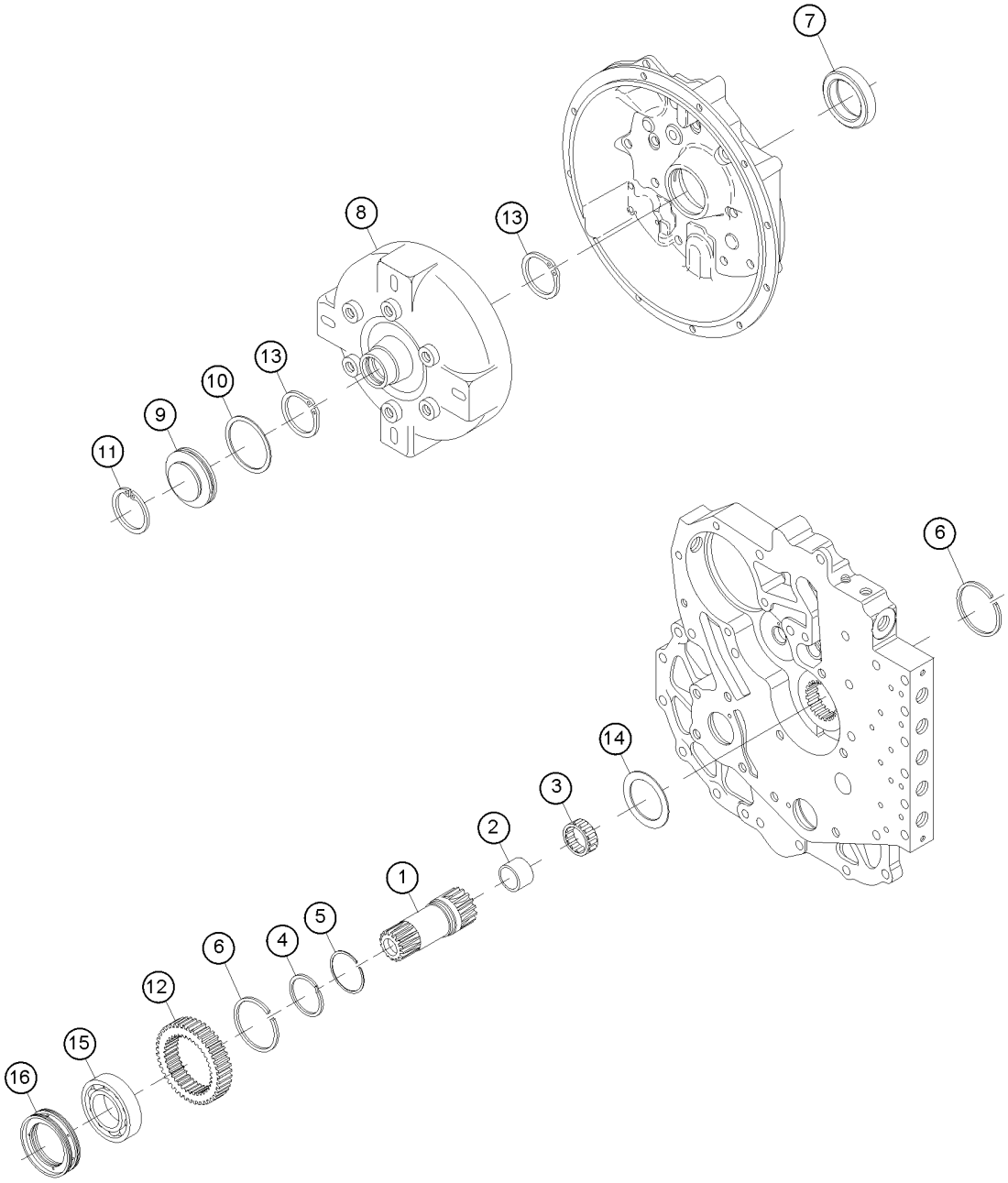

323.1 Dana Torque converter

Item	Part No.	Description	Qty.
1	7-126-411GT	SHAFT, TORQUE CONVERTER, GTH	1
2	7-126-412GT	BUSHING	1
3	7-126-413GT	BEARING / NEEDLE	1
4	7-126-414GT	RING	1
5	7-126-415GT	EXPANDER	1
6	7-126-416GT	SNAP RING	2
7	220092GT	SEAL	1
8	7-126-518GT	CONVERTER	1
8-	1268965GT	TORQUE CONVERTER,DANA 1104F (Use with Deutz 3.6TCD 74HP T4f engine only)	1
9	7-126-234GT	PLUG	1
10	220093GT	O RING	1
11	7-126-277GT	RETAINING RING	1
12	218493GT	GEAR, IMPELLER HUB, 35T-10P	1
13	7-126-418GT	SNAP RING	2
14	7-126-419GT	THRUST WASHER	1
15	7-126-420GT	BEARING	1
16	7-126-421GT	RING-OIL DISTRIBUTOR	1

324.1 Dana Gear Assembly

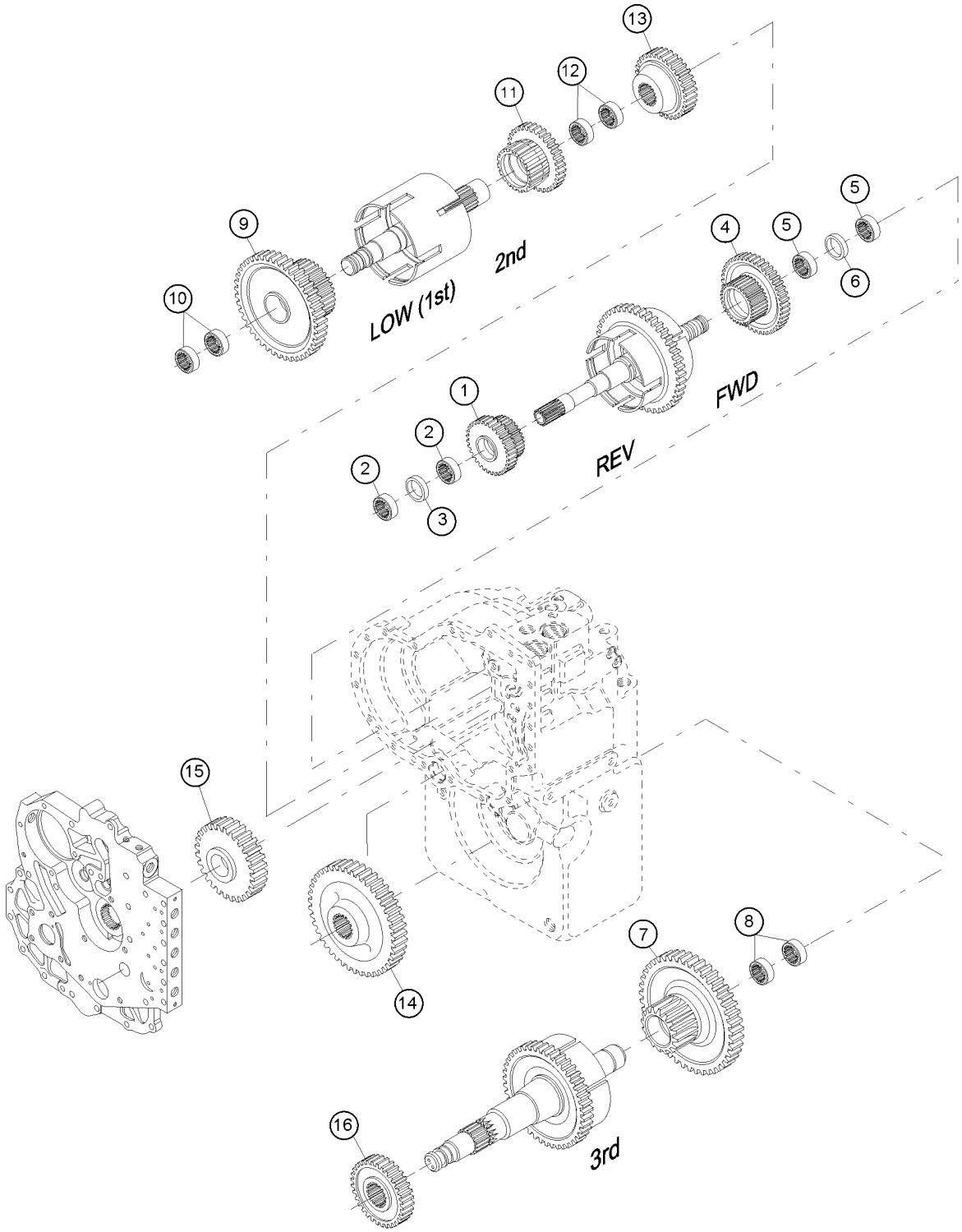

324.1 Dana Gear Assembly

Item	Part No.	Description	Qty.
1	220094GT	GEAR	1
2	7-126-423GT	BEARING	2
3	7-126-424GT	SPACER	1
4	220095GT	GEAR	1
5	7-126-423GT	BEARING	2
6	7-126-424GT	SPACER	1
7	220096GT	GEAR	1
8	7-126-429GT	BEARING	2
9	220097GT	GEAR	1
10	7-126-423GT	BEARING	2
11	220098GT	GEAR	1
12	7-126-423GT	BEARING	2
13	220099GT	GEAR	1
14	7-126-428GT	GEAR WITH BEARING	1
15	7-126-431GT	REVERSE IDLER GEAR	1
16	220100GT	GEAR	1

325.1 Dana Pump Drive Assembly

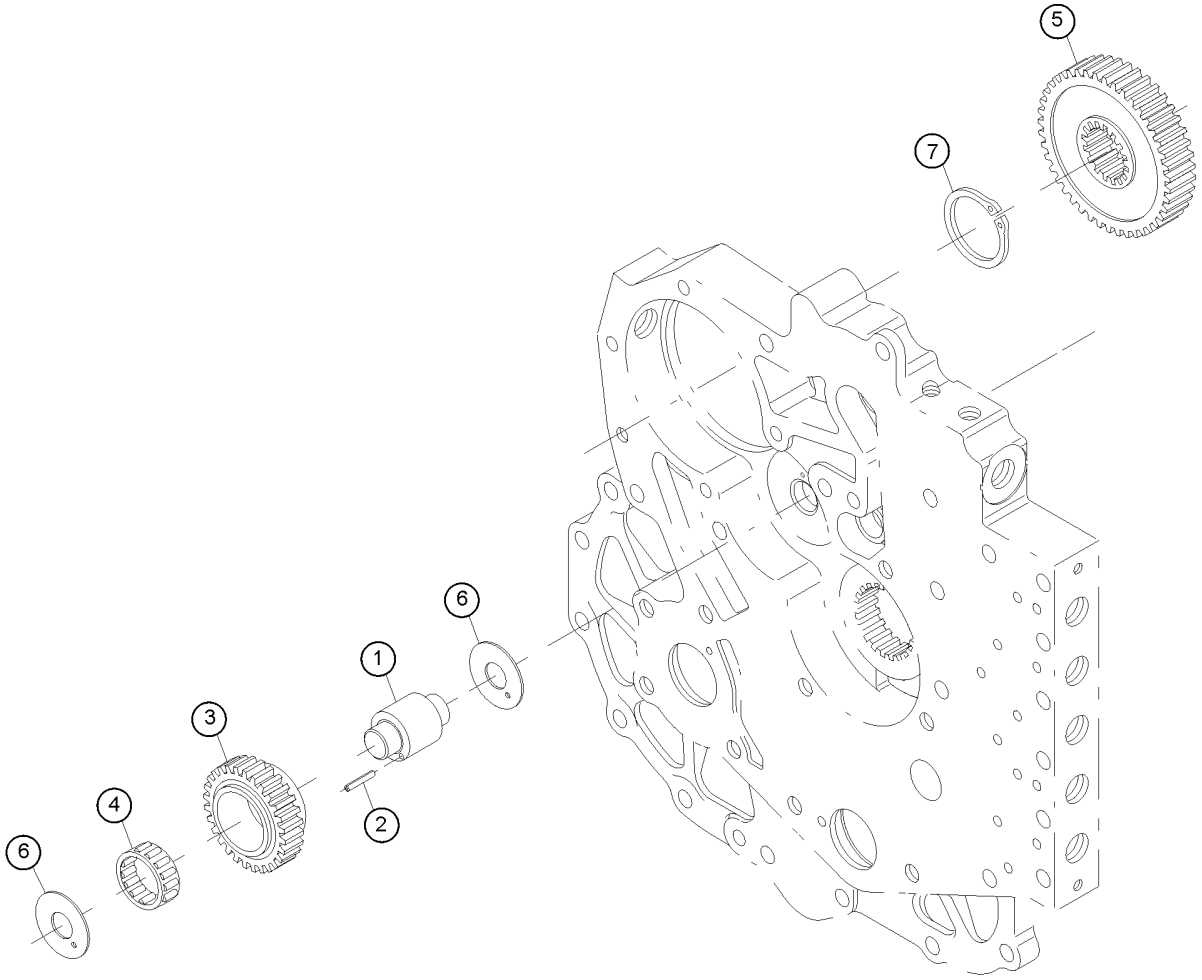

325.1 Dana Pump Drive Assembly

Item	*Part No.*	*Description*	*Qty.*
1	7-126-438GT	PUMP DRIVESHAFT & PIN ASSMBLY	1
2	7-126-439GT	ROLL PIN	1
3	7-126-434GT	PUMP DRIVE IDLER GEAR	1
4	7-126-435GT	BEARING	1
5	7-126-417GT	GEAR	1
6	7-126-437GT	WASHER	2
7	220080GT	SNAP RING	1

326.1 Dana Charge Pump Assembly

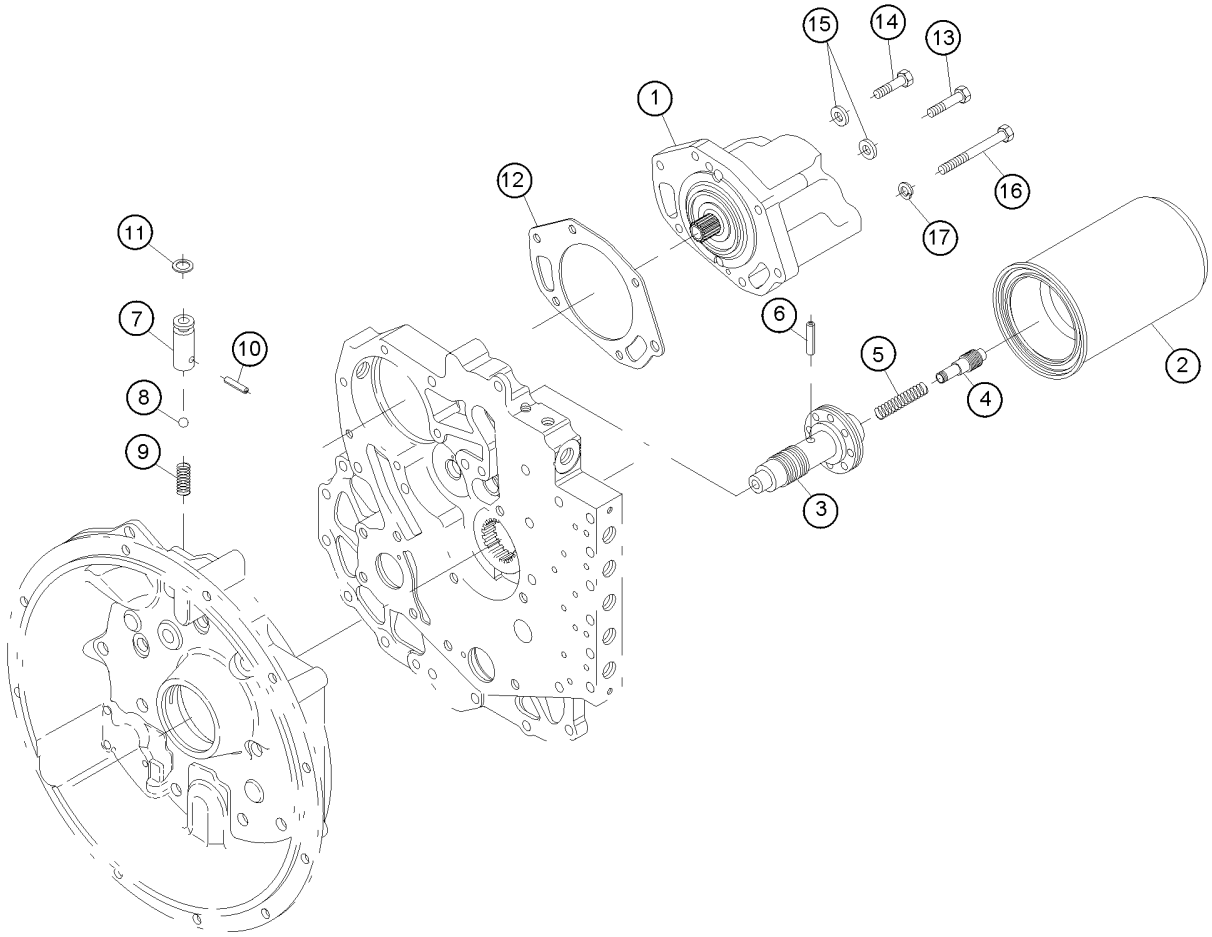

326.1 Dana Charge Pump Assembly

Item	*Part No.*	*Description*	*Qty.*
1	7-126-350GT	CHARGE PUMP ASSY	1
1-	7-126-684GT	SEAL KIT, CHARGE PUMP	
1-	138077GT	PUMP SEAL, MICKEY MOUSE	
2	07.0709.0584GT	ASS. HYDR. SPIN FILTER 4209211	1
3	7-126-442GT	REGULATOR VALVE SLEEVE	1
4	7-126-443GT	PISTON	1
5	7-126-444GT	SPRING	1
6	7-126-445GT	NEEDLE ROLLER	1
7	7-126-446GT	CHECK VALVE	1
8	7-126-208GT	BALL,IDLER SHAFT LOCK	1
9	7-126-448GT	SPRING	1
10	220081GT	PIN	1
11	7-126-361GT	O-RING	1
12	7-126-362GT	GASKET / ADAPTER to PLATE	1
13	220166GT	BOLT	4
14	220167GT	BOLT	1
15	220082GT	SNAP RING	5
16	220168GT	BOLT	1
17	7-126-391GT	LOCKWASHER	1

327.1 Dana Reverse idler

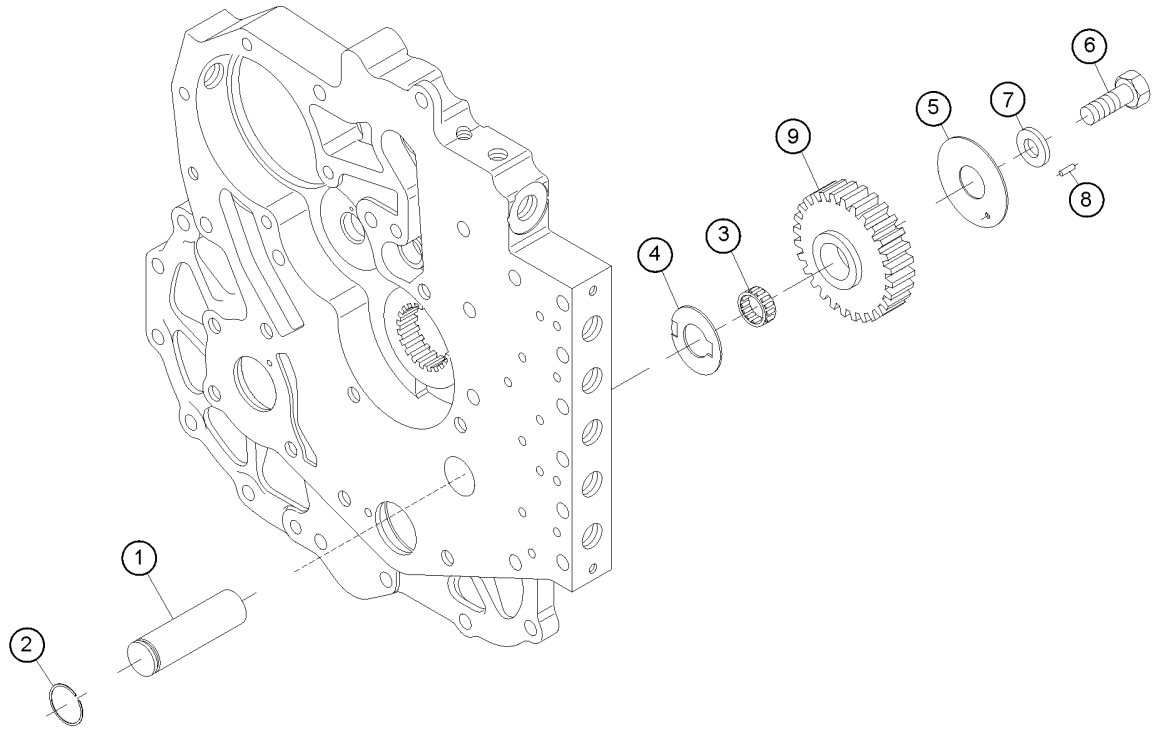

327.1 Dana Reverse idler

Item	*Part No.*	*Description*	*Qty.*
1	220161GT	RELEASE SHAFT	1
2	7-126-458GT	SNAP RING	1
3	7-126-459GT	BEARING	1
4	7-126-460GT	THRUST WASHER	1
5	7-126-461GT	END PLATE	1
6	220078GT	BOLT	1
7	220079GT	WASHER	1
8	7-126-464GT	PIN	1
9	7-126-431GT	REVERSE IDLER GEAR	1

328.1 Dana Forward and Reverse Shaft

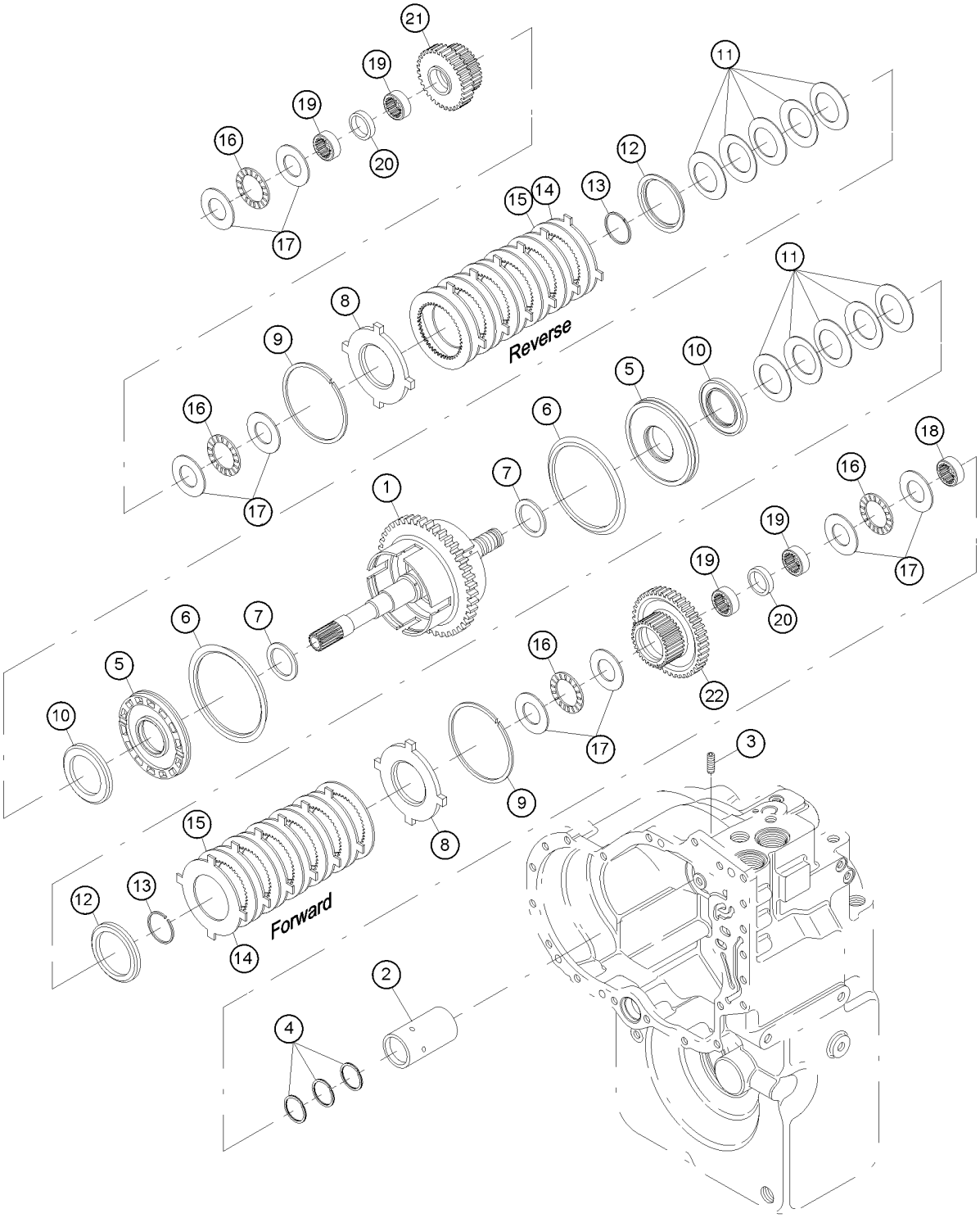

Item	*Part No.*	*Description*	*Qty.*
1	220084GT	SHAFT	1
2	7-126-466GT	OIL DISTRIBUTOR SLEEVE	1
3	220085GT	PLUG	1
4	7-126-468GT	PISTON RING	3
5	7-126-469GT	PISTON & SEAL ASSEMBLY	2
8	7-126-472GT	PLATE	2
9	7-126-473GT	SNAP RING	2
10	7-126-474GT	WEAR RING	2
11	7-126-475GT	DISC SPRING ASSEMBLY	2
12	7-126-476GT	RETAINER	2
13	7-126-477GT	RETAINER	2
14	7-126-478GT	OUTER DISC, FIRST	12
15	7-126-479GT	DISC	12
16	7-126-480GT	BEARING	4
17	7-126-481GT	WASHER	8
18	7-126-482GT	BEARING	1
19	7-126-423GT	BEARING	2
20	7-126-424GT	SPACER	1
21	220094GT	GEAR	1

329.1 Dana Third Gear Shaft

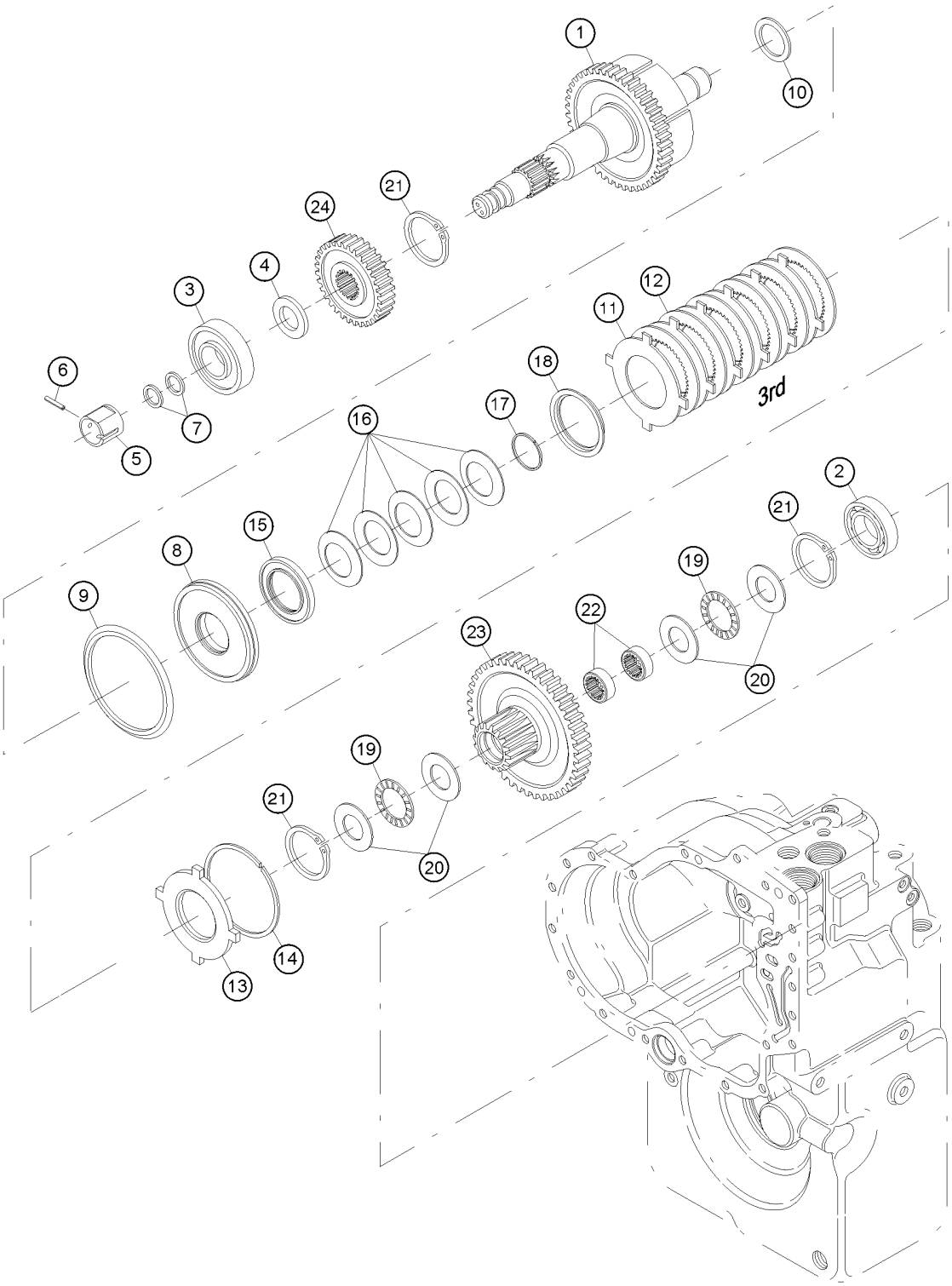

329.1 Dana Third Gear Shaft

Item	Part No.	Description	Qty.
1	220101GT	SHAFT	1
2	7-126-484GT	ROLLER BEARING	1
3	7-126-485GT	BEARING	1
4	7-126-486GT	WASHER	1
5	7-126-487GT	SLEEVE	1
6	220188GT	PLUG	1
7	7-126-468GT	PISTON RING	2
8	7-126-489GT	PISTON	1
9			
10			
11	7-126-478GT	OUTER DISC, FIRST	5
12	7-126-479GT	DISC	5
13	7-126-472GT	PLATE	1
14	7-126-473GT	SNAP RING	1
15	7-126-474GT	WEAR RING	1
16	7-126-475GT	DISC SPRING ASSEMBLY	1
17	7-126-476GT	RETAINER	1
18	7-126-477GT	RETAINER	1
19	7-126-490GT	BEARING	2
20	7-126-491GT	WASHER	4
21	7-126-492GT	SNAP RING	3
22	7-126-429GT	BEARING	2
23	220096GT	GEAR	1
24		GEAR (see 304.1 Gear Assembly)	1

330.1 Dana First and Second Gear Shaft

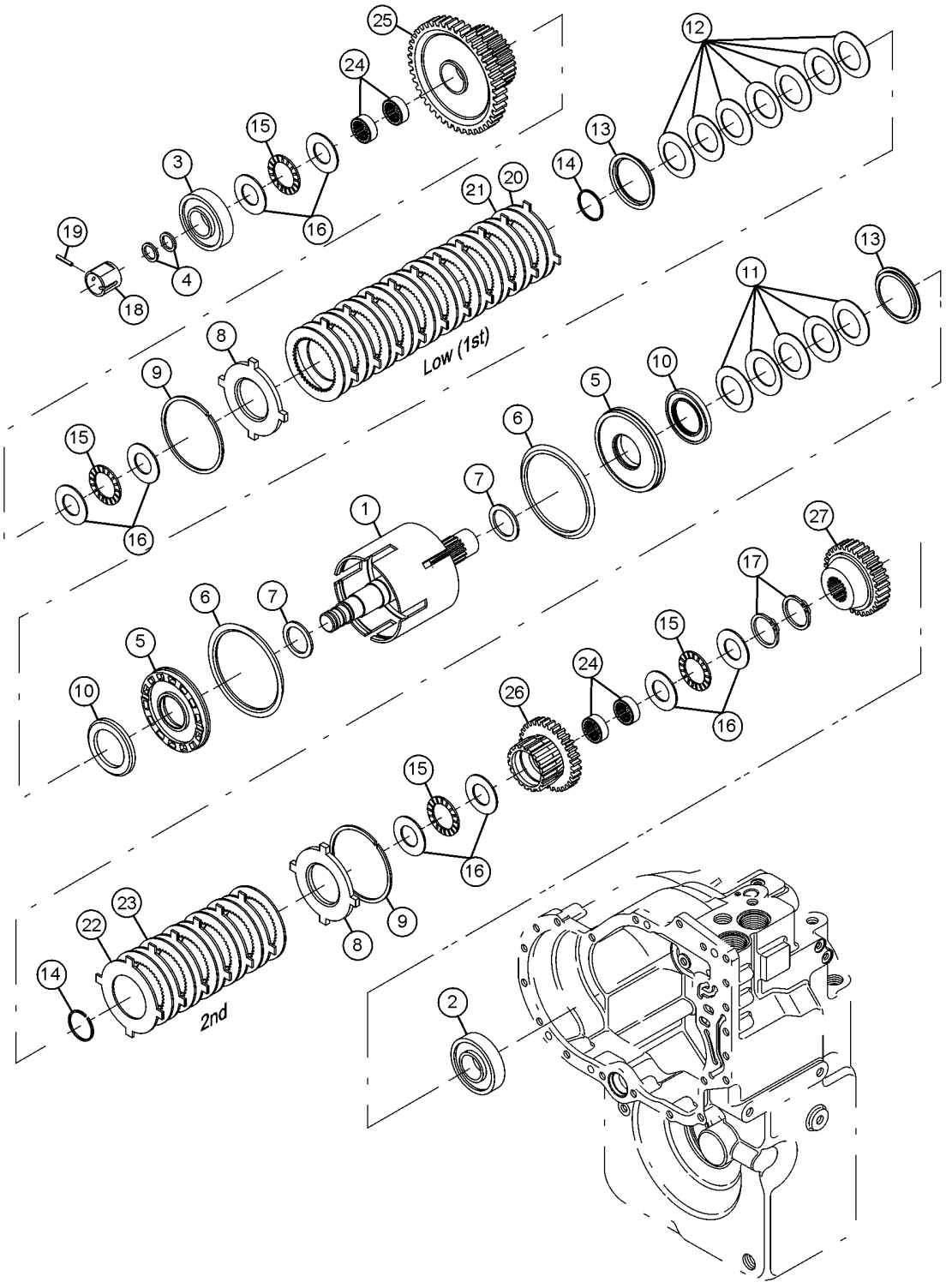

Item	Part No.	Description	Qty.
1	220089GT	SHAFT	1
2	220185GT	BALL BEARING	1
3	7-126-485GT	BEARING	1
4	7-126-468GT	PISTON RING	2
5	7-126-495GT	A CLU PISTON	2
6	7-126-470GT	SEAL	1
7	7-126-471GT	SEAL	2
8	7-126-472GT	PLATE	2
9	7-126-473GT	SNAP RING	2
10	7-126-474GT	WEAR RING	2
11	7-126-475GT	DISC SPRING ASSEMBLY	1
12	7-126-496GT	DISC SPRING ASSY.	1
13	7-126-476GT	RETAINER	2
14	7-126-477GT	RETAINER	2
15	7-126-480GT	BEARING	4
16	7-126-481GT	WASHER	8
17	7-126-497GT	SNAP RING	2
18	7-126-498GT	SLEEVE	1
19	7-126-381GT	SOLENOID BORE PLUG	1
20	7-126-478GT	OUTER DISC, FIRST	10
21	7-126-479GT	DISC	10
22	7-126-478GT	OUTER DISC, FIRST	5
23	7-126-479GT	DISC	5
24	7-126-423GT	BEARING	2
25	220097GT	GEAR	1
26	220098GT	GEAR	1
27	220099GT	GEAR	1
28	220186GT	DETENT BALL	2

330.1 Dana First and Second Gear Shaft

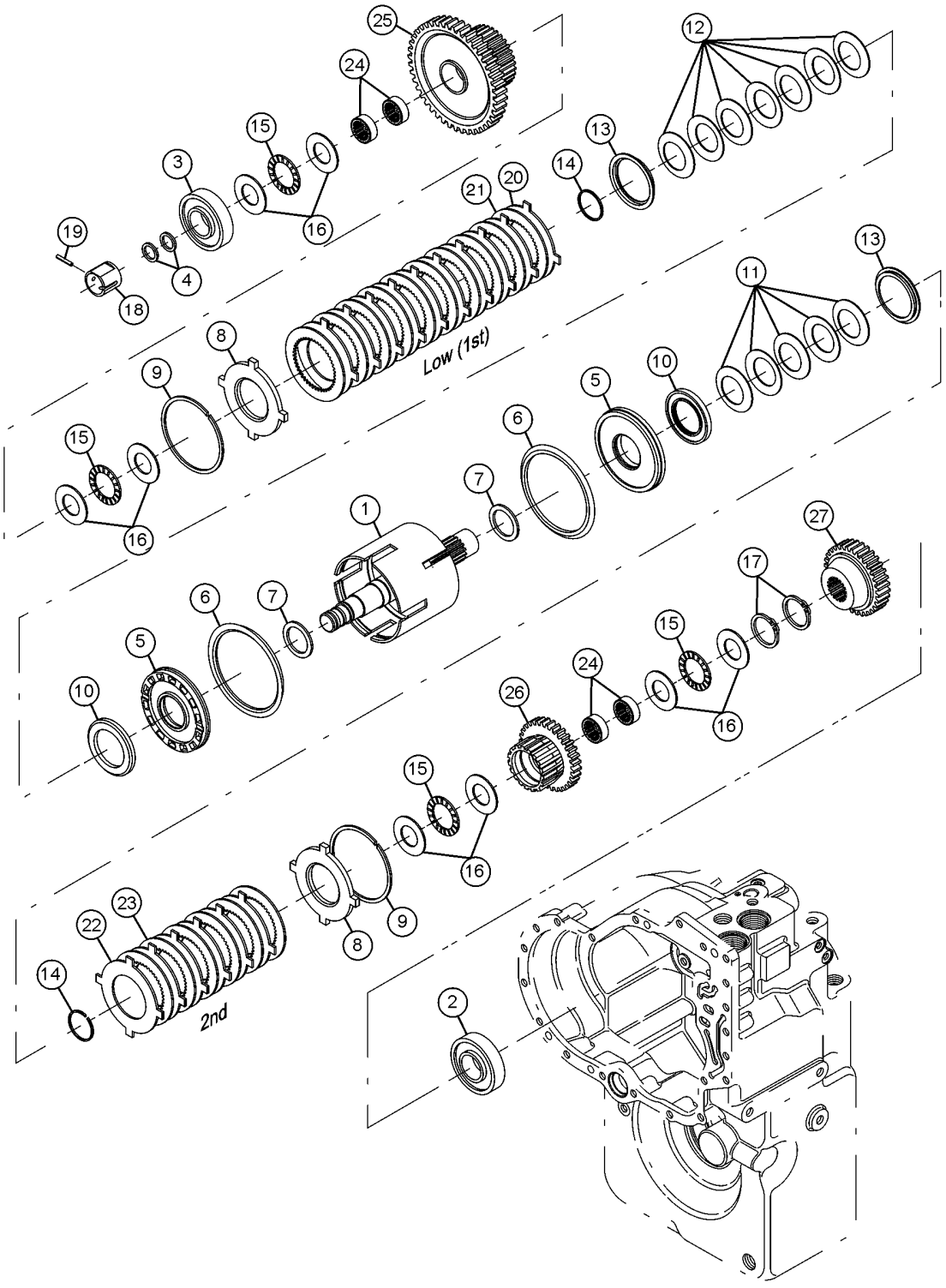

Item	*Part No.*	*Description*	*Qty.*
29	220090GT	VALVE	2

331.1 Dana Output shaft

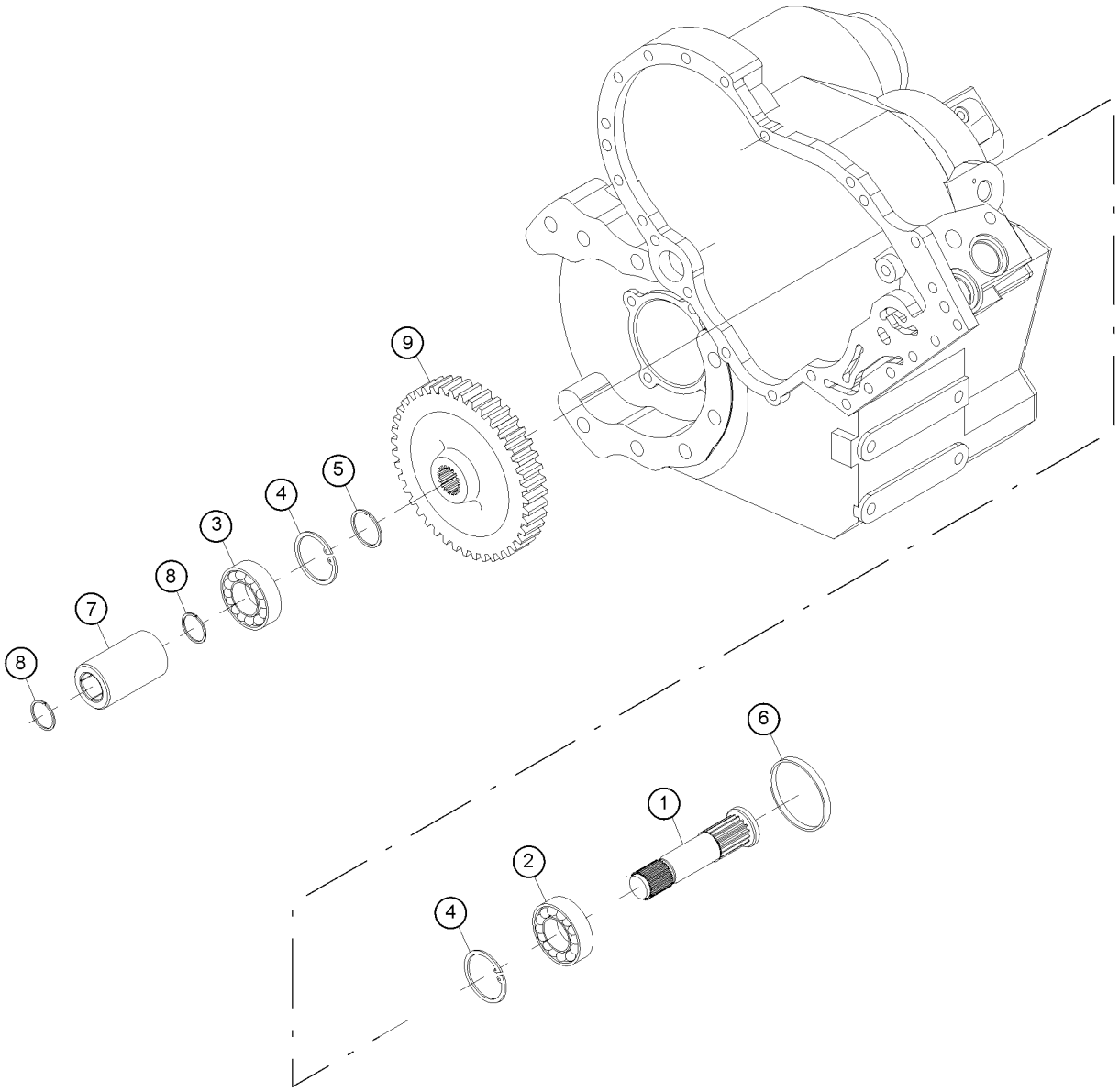

331.1 Dana Output shaft

Item	*Part No.*	*Description*	*Qty.*
1	220086GT	SHAFT	1
2	7-126-307GT	BEARING,BALL	1
3	220184GT	BEARING	1
4	7-126-365GT	SNAP RING / OUTPUT FLANGE	1
5	7-126-369GT	FLANGE RETAINING RING	1
6	220087GT	PLUG	1
7	220088GT	REDUCTION BUSHING	1
8	7-126-492GT	SNAP RING	2
9	7-126-428GT	GEAR WITH BEARING	

332.1 Dana Control and Modulation Valves

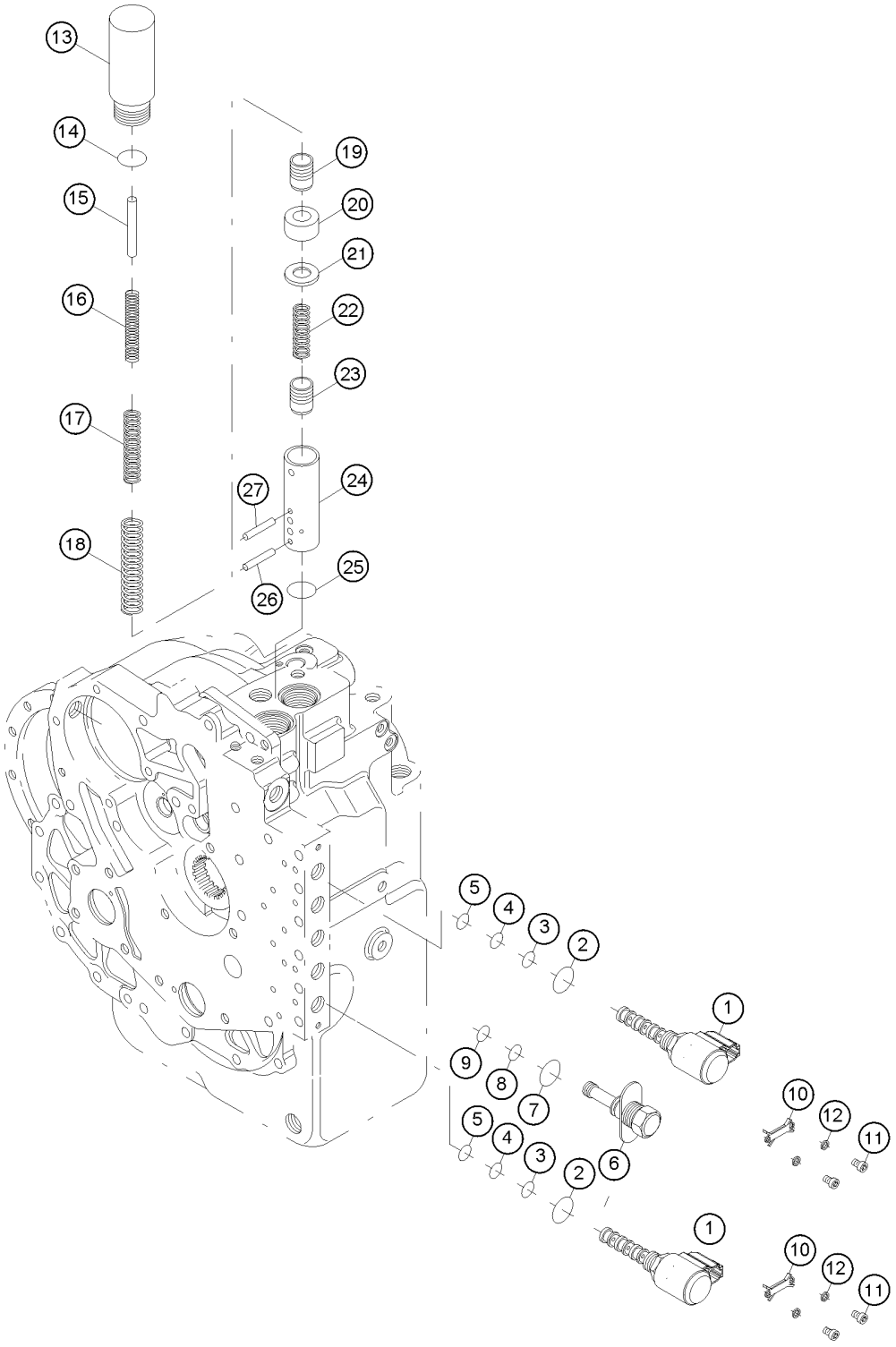

Item	*Part No.*	*Description*	*Qty.*
1	7-126-768GT	SOLENOID ASSY/DROP IN	4
1-	227493GT	HARNESS, TRANSMISSION	
6	7-126-777GT	PLUG-SOLENOID BORE	1
10	7-126-779GT	CLAMP - SOLENOIDS	6
11	220118GT	BOLT	12
13	220119GT	COVER	2
14	7-126-371GT	O-RING / MODULATOR HOUSING	2
15	130071GT	PIN,ACCUM STOP,T20000 TRAN	2
16	130070GT	SPRING,ACCUM,INNER,T20000 TRAN	2
17	7-126-506GT	SPRING,MIDDLE	2
18	7-126-507GT	SPRING,OUTER	2
19	220120GT	FLOW REGULATOR	2
20	220121GT	SNAP RING	2
21	220122GT	SPACER	2
22	220123GT	SPRING	2
23	220189GT	FLOW REGULATOR	2
24	220124GT	SLEEVE	2
25	220125GT	O RING	2
26	220126GT	DOWEL	2
27	220127GT	DOWEL	2

333.1 Dana Flex plate

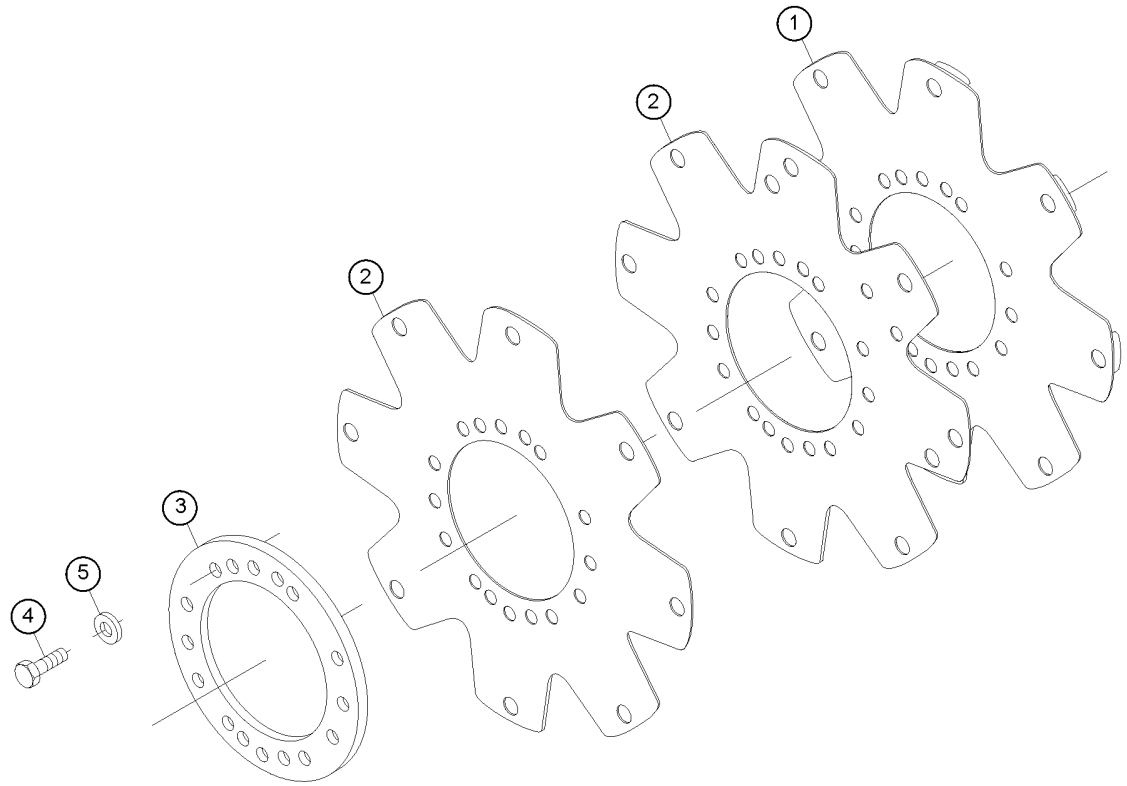

333.1 Dana Flex plate

Item	*Part No.*	*Description*	*Qty.*
-	1263050GT	ASSEMBLY KIT,FLEXPLATE,DEUTZ (fits Deutz TCD3.6 engines)	1
-	7-126-383GT	DRIVE PLATE ASSY KIT (includes items 1-5)	1
1	7-126-351GT	FLEX PLATE w/ WELD NUTS (fits Perkins 1104D engines)	1
2	227989GT	DRIVE PLATE KIT (fits Perkins 1104D engines)	1
3	7-126-60GT	RING	1
4	7-126-516GT	SCREW,HHC,3/8-16X.625,GR5	6
5	7-126-54GT	WASHER,LOCK,SPLIT,3/8	6

334.1 Dana Transfer Case (drop box)

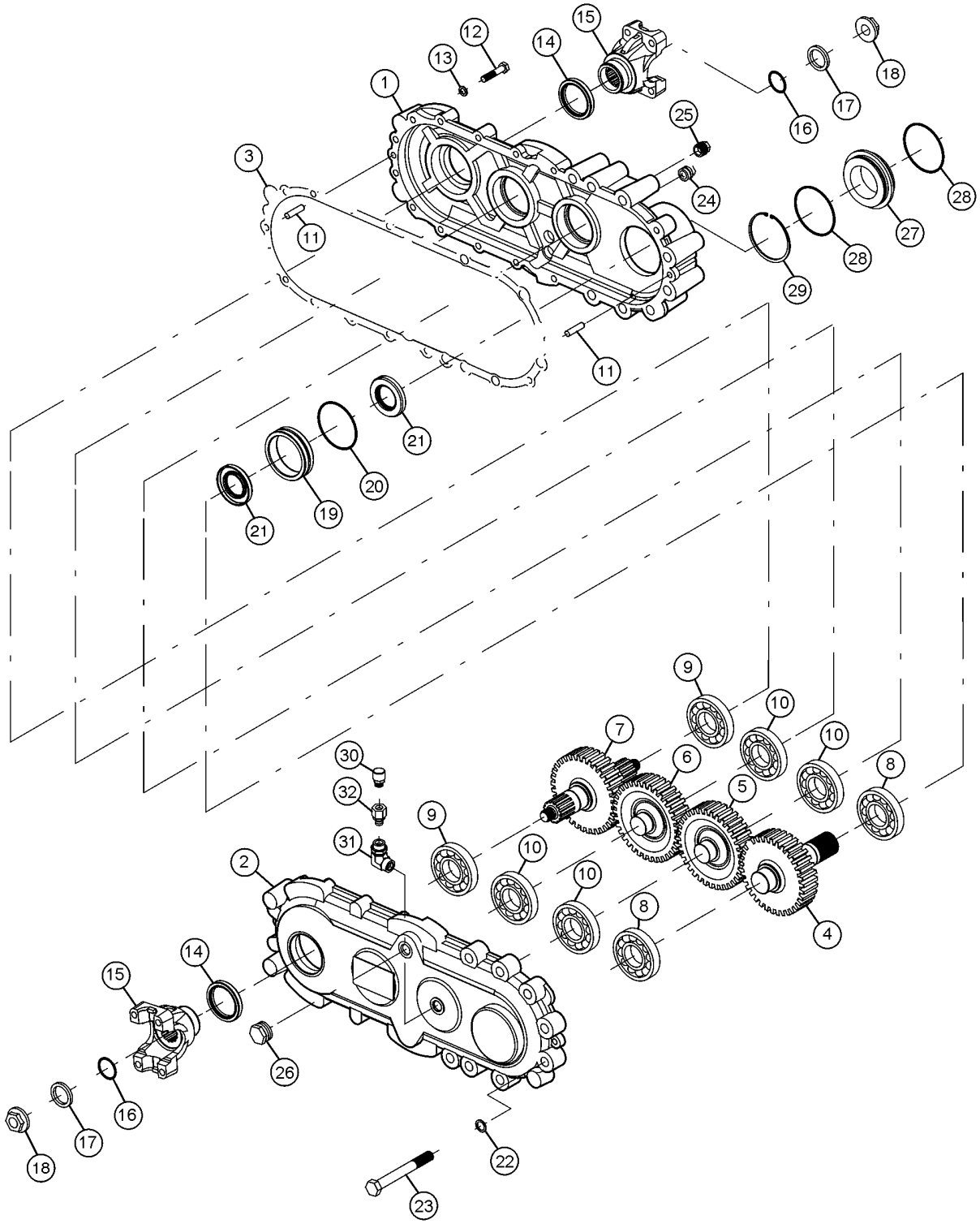

334.1 Dana Transfer Case (drop box)

Item	Part No.	Description	Qty.
1	220136GT	COVER	1
2	220137GT	COVER	1
3	220138GT	GASKET	1
4	220139GT	SHAFT	1
5	220140GT	GEAR	1
6	220141GT	GEAR	1
7	220142GT	SHAFT	1
8	220143GT	BALL BEARING	2
9	220144GT	BALL BEARING	2
10	220145GT	ROLLER BEARING	4
11	220106GT	DOWEL	2
12	220113GT	BOLT	13
13	7-126-391GT	LOCKWASHER	13
14	220130GT	SEAL	2
15	220131GT	FLANGE	2
16	220132GT	O RING	2
17	220133GT	LOCK WASHER	2
18	220134GT	NUT	2
19	220135GT	SEAL	2
20	7-126-366GT	O-RING / OIL SEAL	1
21	220146GT	SEAL	2
22	220147GT	WASHER	8
23	220148GT	BOLT	8
24	220149GT	PLUG	1
25	1259111GT	OIL LEVEL GLASS	1
26	7-229-768GT	PLUG	1
27	1259113GT	SLEEVE	1
28	220154GT	O RING	2

334.1 Dana Transfer Case (drop box)

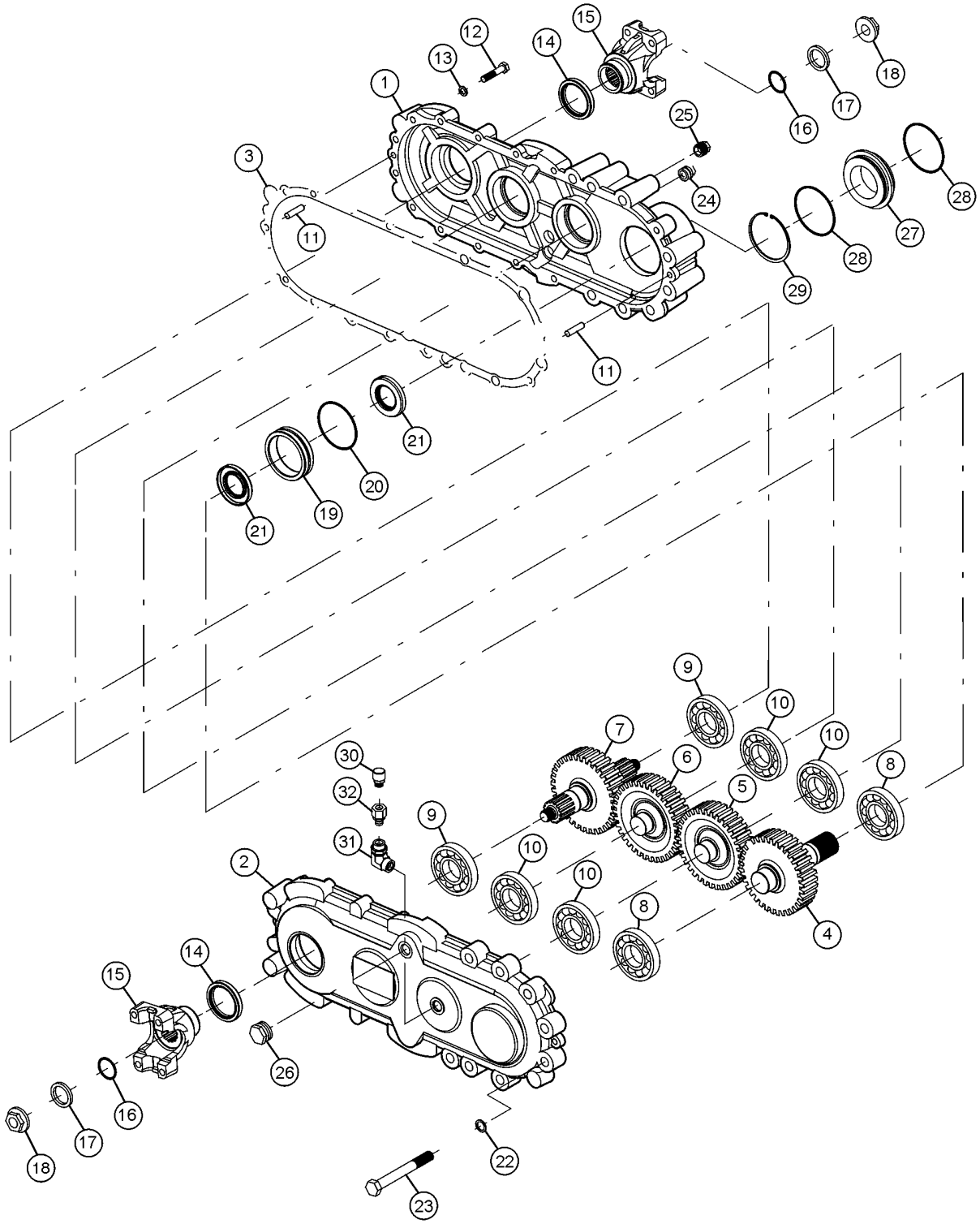

Item	*Part No.*	*Description*	*Qty.*
29	7-126-365GT	SNAP RING / OUTPUT FLANGE	1
30	220155GT	VENT	1

401.1 Standard Cab Components, View 1

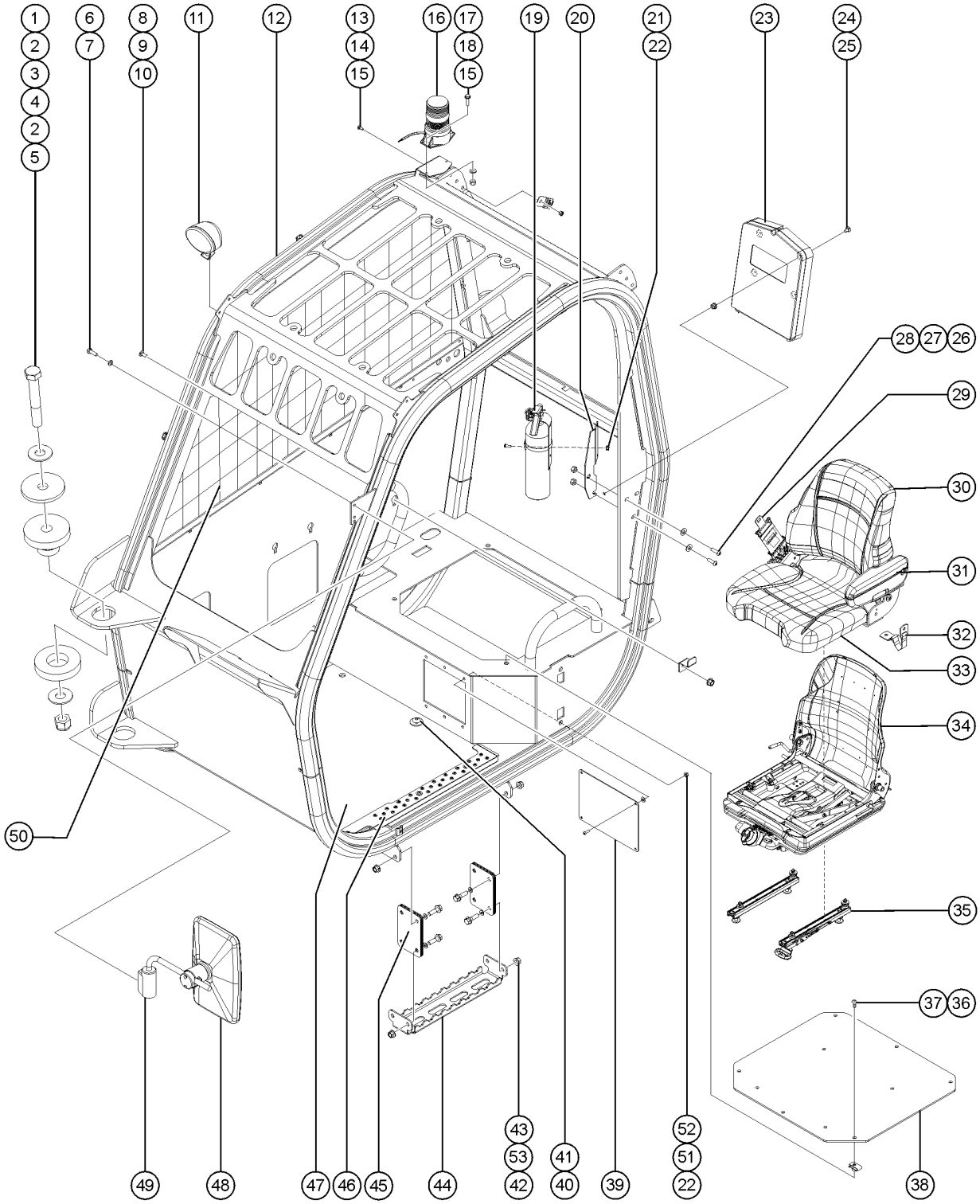

401.1 Standard Cab Components, View 1

Item	Part No.	Description	Qty.
1	1256466GT	SCREW,HHC,1-8X6.5,8,ZAG	4
2	1256469GT	WASHER,FLAT,1.0,USS,ZAG	8
3	1254034GT	WASHER,RUBBER MOUNT,CAB	4
4	123139GT	ISOLATOR,CAB	4
5	123189GT	NUT,NYLOCK,1-8,GR8	4
6	1256450GT	SCREW,HHC,M6-1.0X20,DIN933,10.9,ZAB	3
7	825355GT	WASHER,FLAT,M6,DIN125,ZAB	3
8	824125GT	BOLT, CARRIAGE, 3/8-16 X 1, 5, ZAG	1
9	1253961GT	FORMING,SIDE CONSOLE MOUNT	1
10	1274322GT	NUT,NYLOCK FLG,3/8-16,F,ZAG	1
11		REF. LIGHT,LED,CLEAR,5"ROUND 12/24V refer to 901.1	
12	1294730GT	WELDMENT,CAB	1
13	1256282GT	BOLT,CARRIAGE,10-24X.5,5,ZAG	1
14	229987GT	CLIP,METAL MOUNT RECEP DEUTSCH	1
15	1274170GT	NUT, NYLOCK, 10-24, A, ZAG	3
16	231931GT	STROBE, BEACON, AC COMP, 12-80V	1
17	1262031GT	SCREW,HHF,10-24X.75,ZAG	2
18	1253185GT	WASHER,FLAT,#10,USS,ZAG	2
19	88406GT	FIRE EXTINGUISHER	1
20	1254055GT	FORMING,EXTINGUISHER MOUNT	1
21	824027GT	NUT, TL FLG, 1/4-20, G, ZAG	2
22	1278088GT	SCREW,BHC,TORX PLUS, 1/4-20X3/4,F835,ZAG	8
23	24514GT	BOX, INSTRUCTION STORAGE** Europe/Asia/South America	1
23B	44743GT	MANUAL BOX W/DECALS*** USA/Canada/Australia	1
24	1256462GT	BOLT,CARRIAGE,1/4-20X.5,5,ZAG	2
25	1256679GT	NUT,SERRATED,1/4-20,8,ZAG	2
26	1255629GT	SCREW,BHC,3/8-16X1.25,F835,ZAG	2
27	1255758GT	WASHER,FLAT,3/8,USS,ZAG	3

401.1 Standard Cab Components, View 1

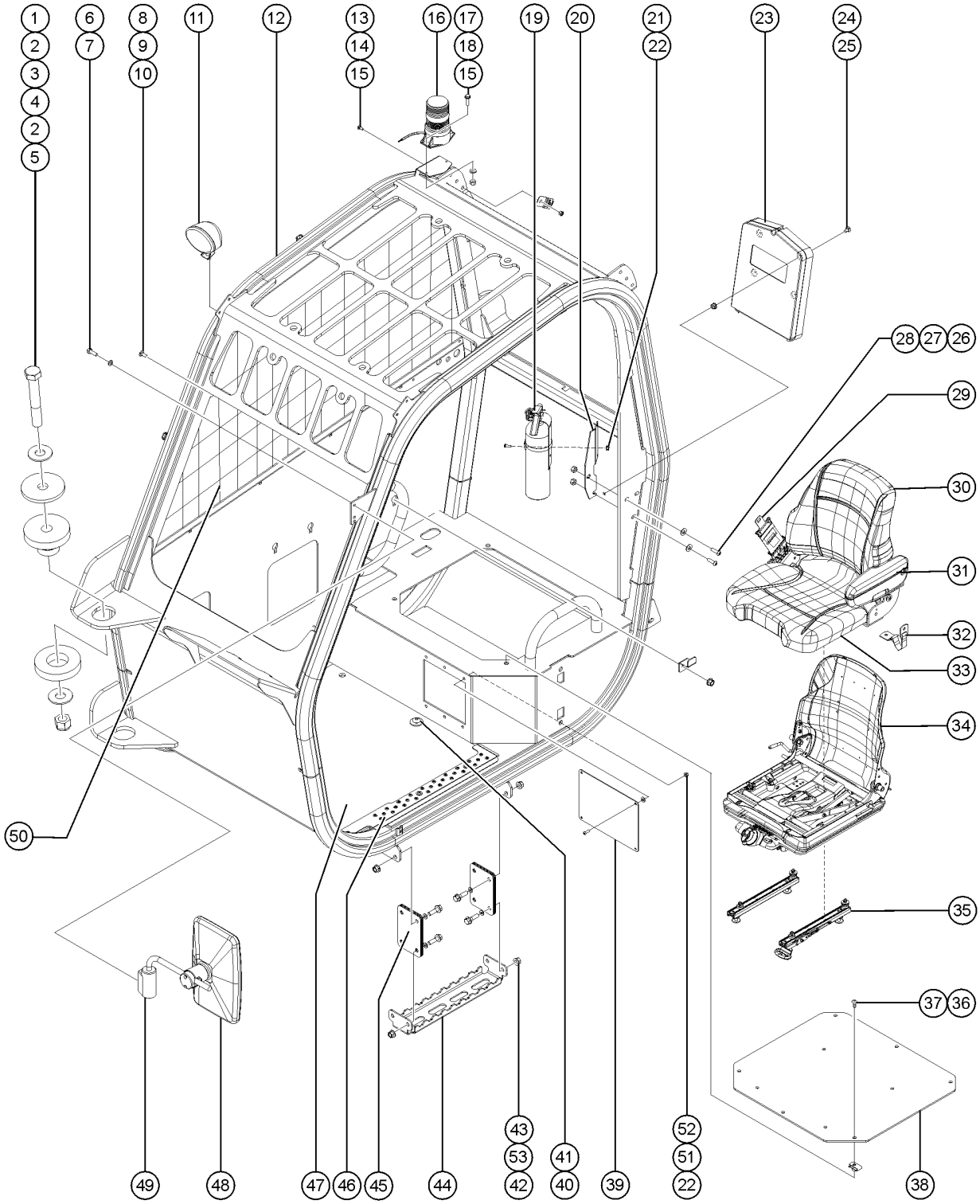

401.1 Standard Cab Components, View 1

Item	Part No.	Description	Qty.
28	824038GT	NUT, TL JAM, 3/8-16, A, ZAG	2
29	1296540GT	SEAT BELT ASSY,3",RED	1
30	1296542GT	COVER, SEAT BACK, SUSPENSION	1
31	1296539GT	ARMREST, LH	1
32	1296568GT	TETHERS, SEAT	1
33	1296541GT	COVER, SEAT BASE, SUSPENSION	1
34	1296180GT	ASSY, SEAT, SUSPENSION, RECLINE	1
34-	1296567GT	FRAME, SEAT	1
35	1296538GT	TRACK ASSY, SEAT ADJUST	2
36	1255393GT	SCREW,BHC,3/8-16X1,F835,ZAG	4
37	29868GT	SPRING CLIP,3/8-16,.05-.20X.73,ZAG	4
38	1254148GT	PLATE,SEAT MOUNT	1
39	1253981GT	COVER,CAB AIR INTAKE no longer available, replaced by 130051GT	1
39B	1300051GT	COVER, CAB AIR FILTER	1
40	824227GT	SCREW, BHC, 1/4-20 X 1, ZAG	7
41	824113GT	WASHER,FLAT,USS,1/4,ZAG	
42	1274320GT	NUT,NYLOCK,1/2-13,C,ZAG	8
43	826171GT	SCREW,HHF,1/2-13X1.75,ZAG	8
44	1253956GT	FORMING,CAB STEP	1
45	123108GT	STRAP,FLEXIBLE STEP	2
46	1256323GT	FORMING, FLOOR MAT (used in open cab)	1
46B	1254146GT	FORMING, FLOORMAT GUARD (used in closed cab)	1
47	214581GT	FLOORMAT, CAB	1
48	1279208GT	MIRROR, CAB, GTH	1
49	1279209GT	MIRROR ARM, CAB, GTH	1
50	1313665GT	ASSEMBLY, RH SCREEN, GTH	1
51	824113GT	WASHER,FLAT,USS,1/4,ZAG	4
52	1274165GT	NUT,NYLOCK,1/4-20,C,ZAG	4

401.1 Standard Cab Components, View 1

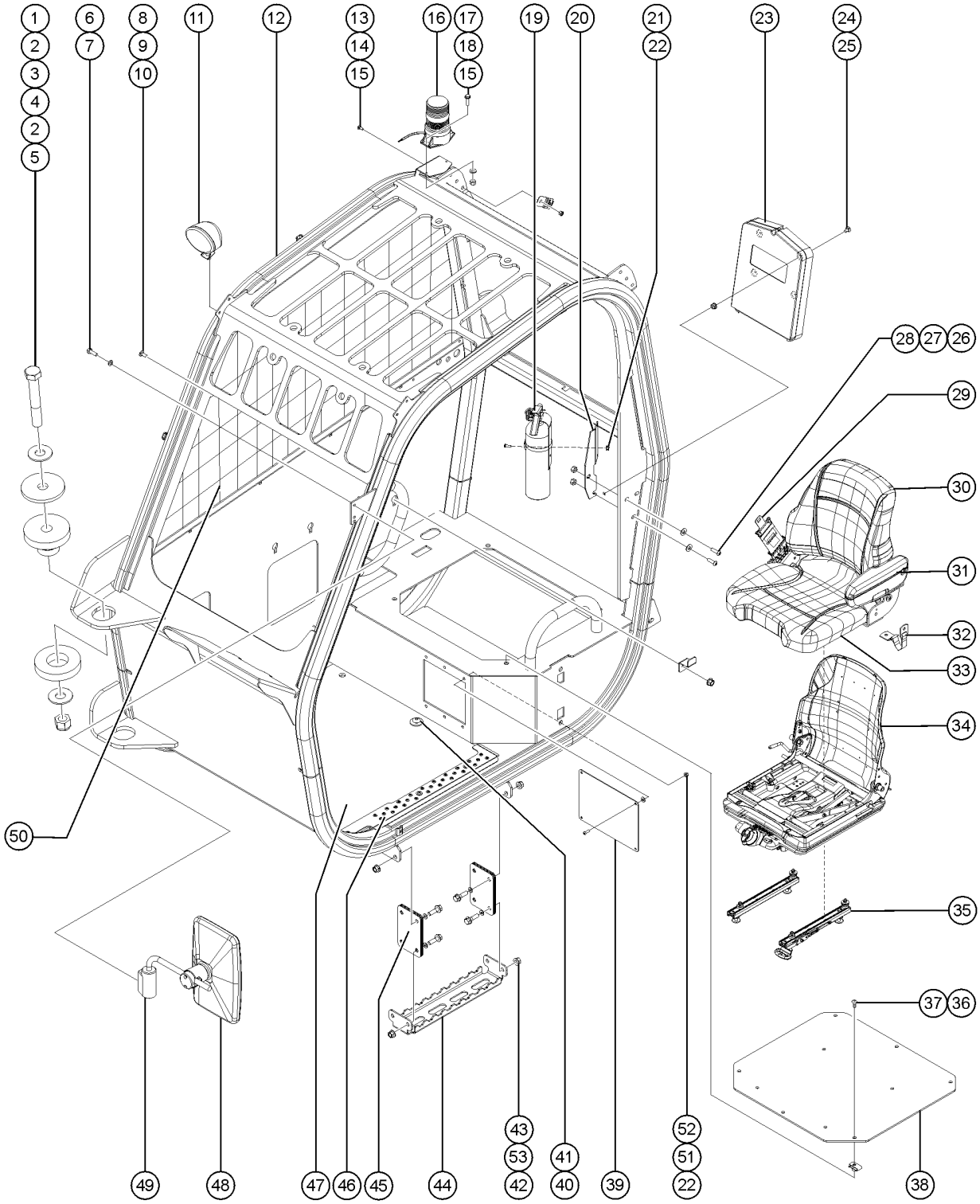

401.1 Standard Cab Components, View 1

Item	*Part No.*	*Description*	*Qty.*
53	1255760GT	WASHER,FLAT,1/2,USS,ZAG	8

402.1 Standard Cab Components, View 2

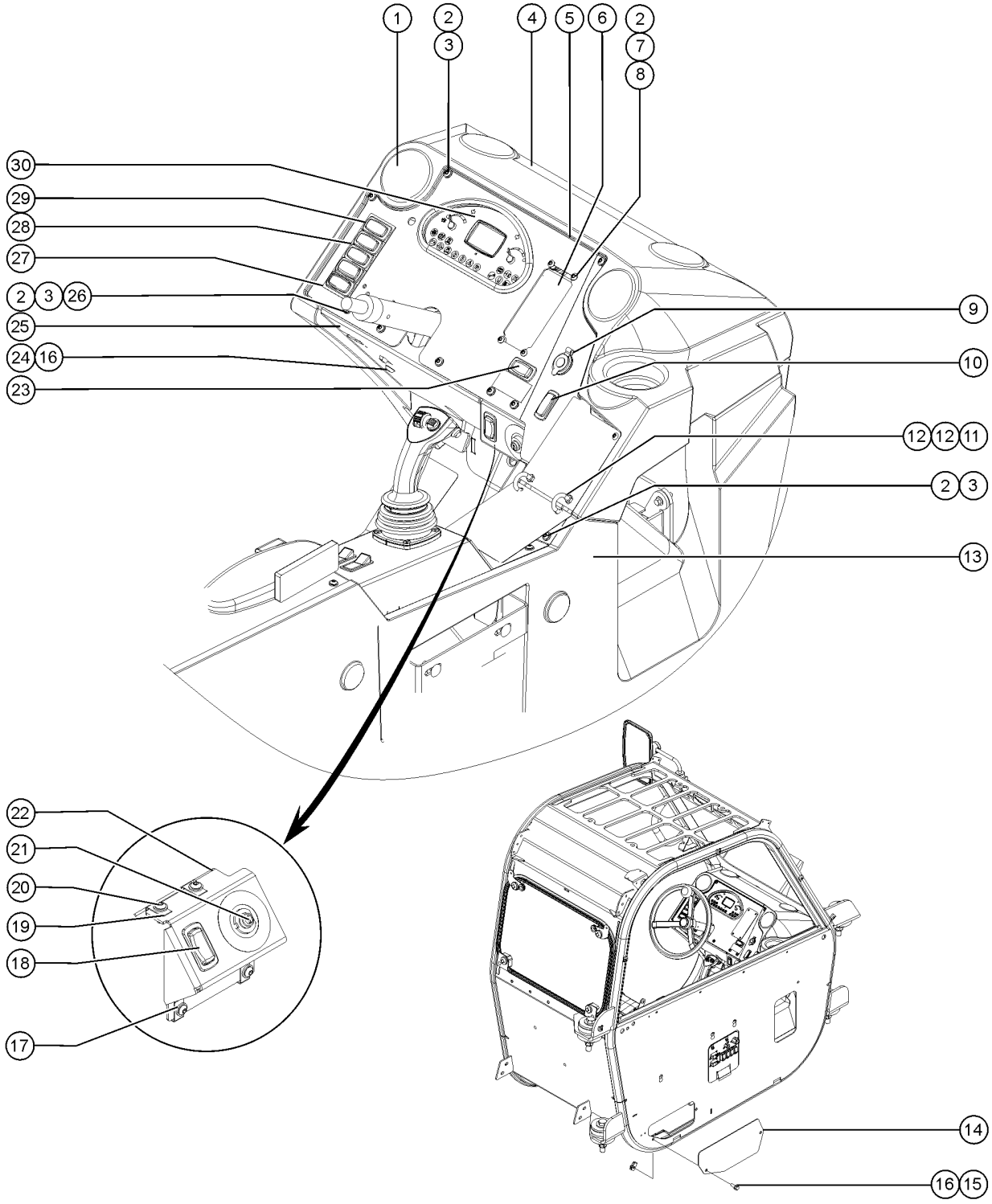

402.1 Standard Cab Components, View 2

Item	Part No.	Description	Qty.
1	123572GT	HOLE PLUG, 3 IN	4
2	1278088GT	SCREW,BHC,TORX PLUS, 1/4-20X3/4,F835,ZAG	17
3	1256125GT	WASHER,FLAT,#12,SAE,HRD,ZAG	13
4	1253960GT	COVER,DASH	1
5	1289721GT	FORMING,DASH PANEL	1
6	1253983GT	COVER,CONTROL PANEL	1
7	18666GT	CLAMP,1.00,#16 X 1/4,RUB CUSH	1
8	1277924GT	NUT,NYLOCK FLG,1/4-20,F,ZAG	4
9	229978GT	PORT POWER 12V, 10A	1
10	123567GT	PANEL PLUG	5
10B	1283122GT	SWITCH,EAT DEF REGEN	
11	1296102GT	U-BOLT,1/4-20 X .75,1.75 X1.00	2
12	1256679GT	NUT,SERRATED,1/4-20,8,ZAG	8
13	1298547GT	COVER, SIDE CONSOLE	1
14	1253982GT	COVER,PANEL ACCESS	1
15	824090GT	SCREW,HHF,3/8-16X1,8,ZAG	2
16	29868GT	SPRING CLIP,3/8-16,.05-.20X.73,ZAG	4
17	1256125GT	WASHER,FLAT,#12,SAE,HRD,ZAG	4
18	123200GT	SWITCH, PARKING BRAKE	1
19	56912GT	SPRING CLIP,1/4-20,.025-.15X.54,ZAG	4
20	1256124GT	SCREW,BHC,1/4-20X.75,F835,ZAG	4
21	1307791GT	SWITCH,IGNITION	1
22	1275660GT	FORMING, IGN SWITCH MOUNTING	1
23	123201GT	SWITCH,STEER/WIPER	1
24	1255393GT	SCREW,BHC,3/8-16X1,F835,ZAG	2
25	1275657GT	FORMING,LOWER DASH	1
26	56912GT	SPRING CLIP,1/4-20,.025-.15X.54,ZAG	7
27	123568GT	END BEZEL	2

402.1 Standard Cab Components, View 2

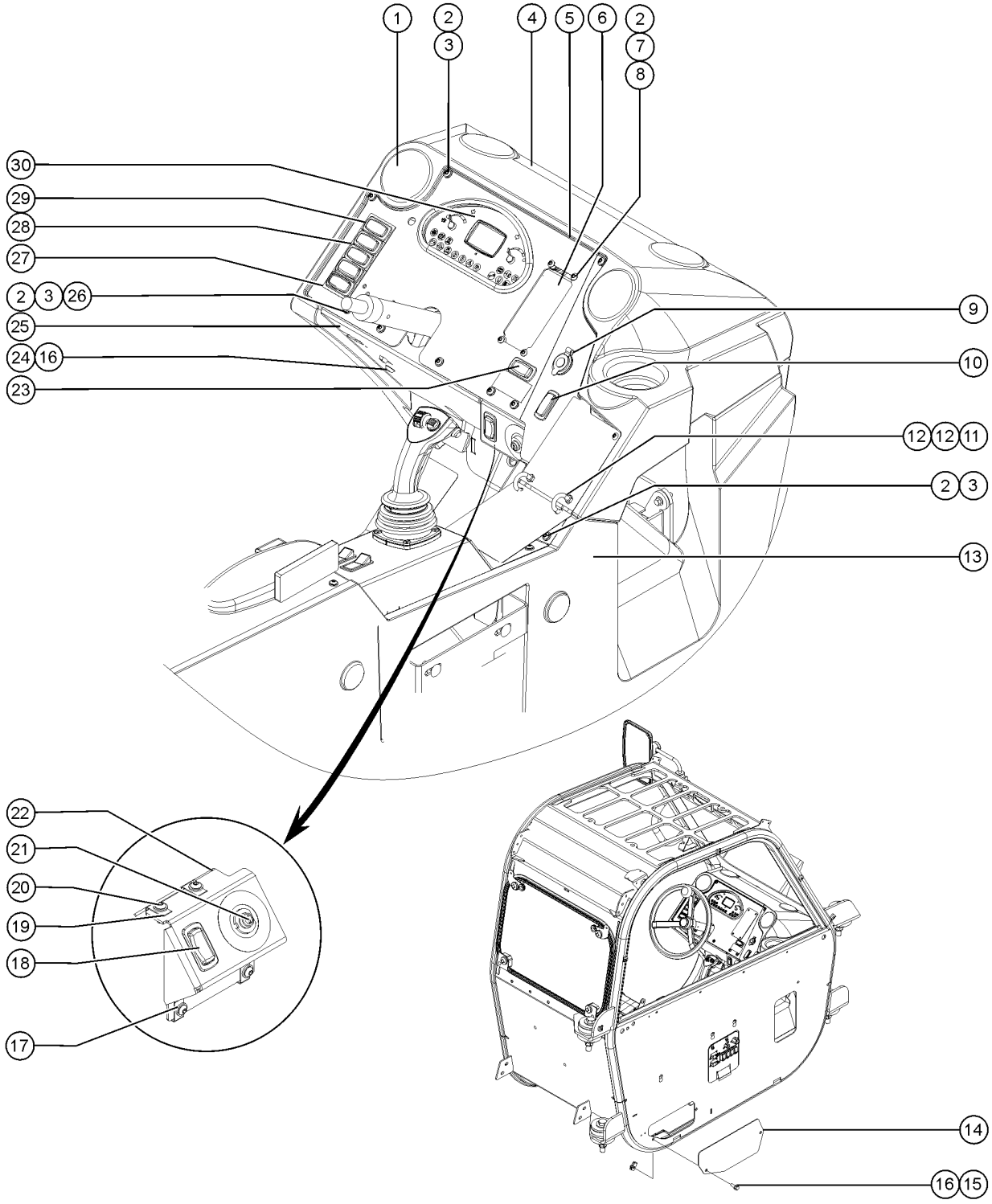

402.1 Standard Cab Components, View 2

Item	*Part No.*	*Description*	*Qty.*
28	123569GT	CENTER BEZEL	3
29	123567GT	PANEL PLUG	5
30	1304154GT	GAUGE CLUSTER, CAN ENABLED, GTH, GENII use until exhausted, replaced by 1317570GT	1
30B	1317570GT	GAUGE CLUSTER, CAN ENABLED, GTH	1

403.1 Standard Cab Components, View 3

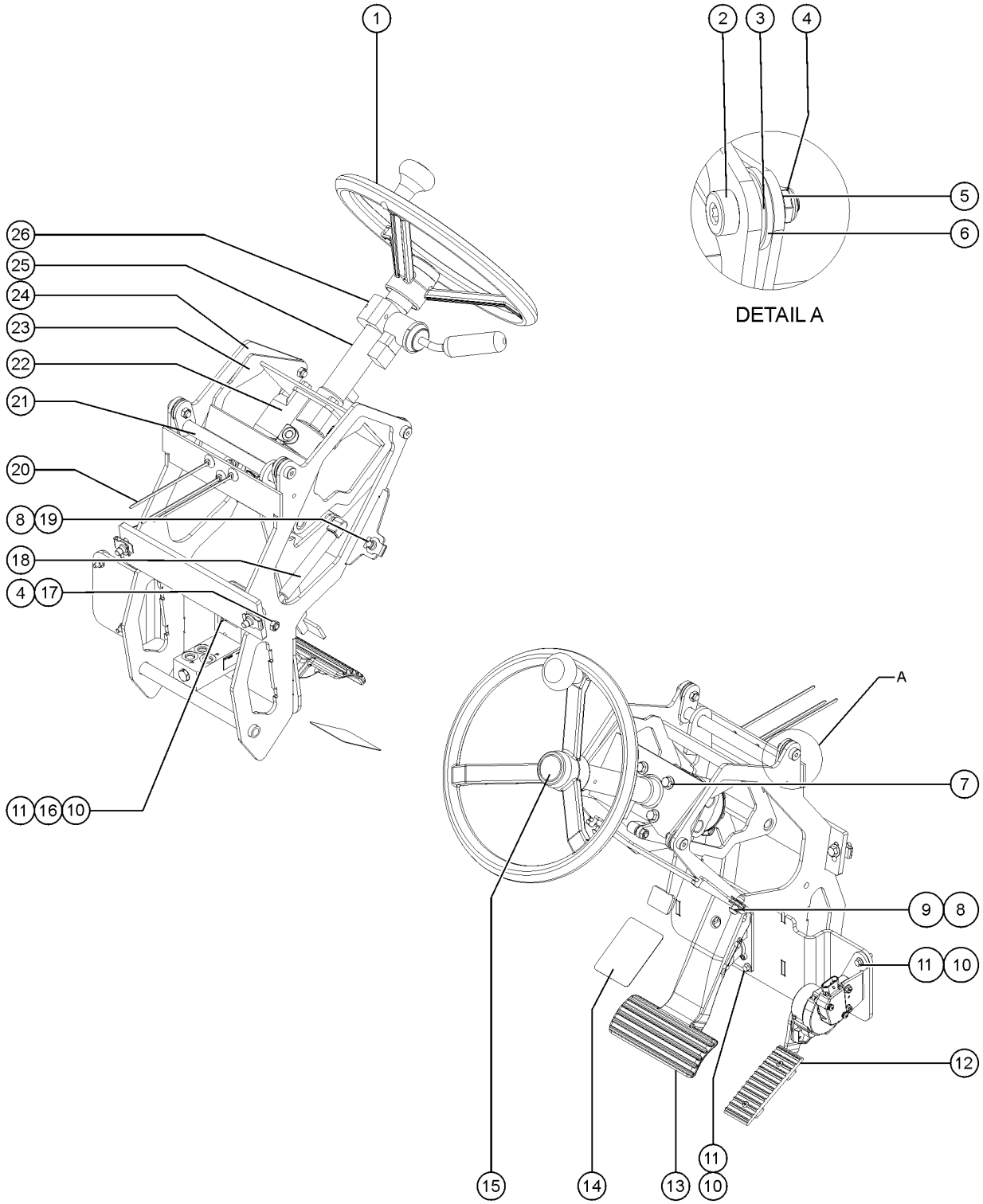

403.1 Standard Cab Components, View 3

Item	Part No.	Description	Qty.
1	123136GT	STEERING WHEEL, 362MM	1
2	1256478GT	BOLT,SHS,1/2X.5X3/8-16,ZAG	4
3	87075GT	WASHER,NYLON .50 X 1.25 X .063	4
4	824038GT	NUT, TL JAM, 3/8-16, A, ZAG	6
5	825358GT	WASHER,FLAT,5/16,USS,ZAG	4
6	1255760GT	WASHER,FLAT,1/2,USS,ZAG	4
7	824090GT	SCREW,HHF,3/8-16X1,8,ZAG	4
8	1255393GT	SCREW,BHC,3/8-16X1,F835,ZAG	2
9	29868GT	SPRING CLIP,3/8-16,.05-.20X.73,ZAG	4
10	824079GT	SCREW,HHF,1/4-20X1,8,ZAG	5
11	1256679GT	NUT,SERRATED,1/4-20,8,ZAG	5
12	1294466GT	THROTTLE PEDAL, METAL, GTH	1
13	1296456GT	ASSEMBLY, BRAKE VALVE from SN GTH10E-16084	1
14	237662GT	TAPE,NON-SKID,DIE CUT,3"X 4"	1
15	7-147-41GT	HORN BUTTON KIT***	1
16	824113GT	WASHER,FLAT,USS,1/4,ZAG	1
17	78086GT	BALL STUD, GAS STRUT, 3/8-16	2
18	39542GT	GAS SHOCK, SCISSORS***	1
19	824091GT	SCREW, HHF, 3/8-16 X 1.25, 8, ZAG	2
20	110149GT	CABLE TIE,DFT MOUNT,BLK,6.5"	3
21	1253948GT	WELDMENT,TILT LOCK	1
22	1283327GT	STEERING UNIT, 250CC W/LS RELIEF	1
23	1254033GT	WELDMENT,STEER COLUMN	1
24	1282269GT	WELDMENT,STEERING COLUMN	1
25	218100GT	COLUMN, STEERING, 225MM	1
26	1292103GT	SHIFTER, GEAR, 4 SPEED ZF Sidedropp Transmissions Only	1
26B	1295032GT	SHIFTER, DIRECTION, F-N-R CVT Transmissions Only	1
26C	7-125-05GT	SHIFTER ASSEMBLY CVT Only	1

404.1 Standard Cab Components, View 4

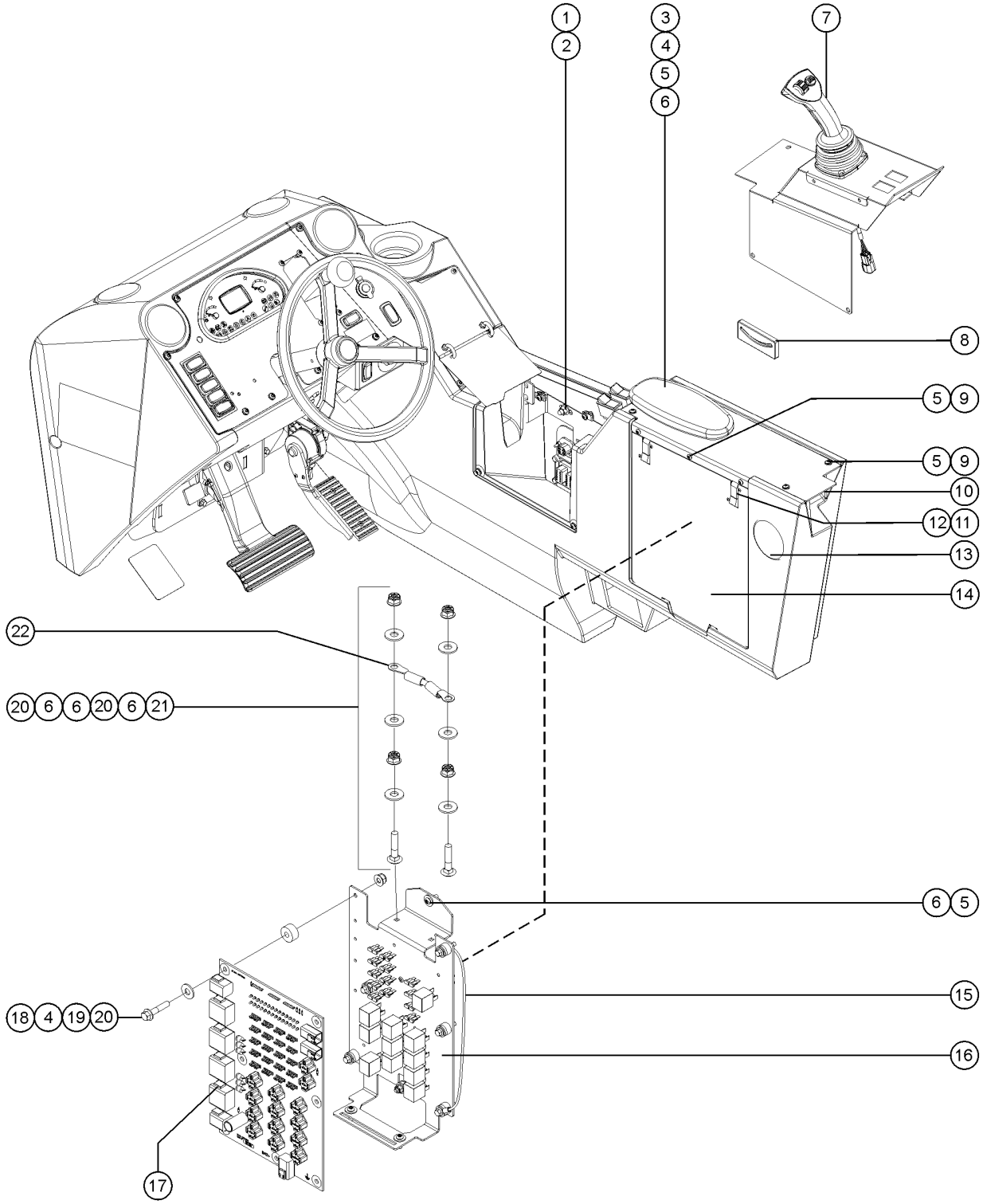

404.1 Standard Cab Components, View 4

Item	Part No.	Description	Qty.
1	824125GT	BOLT, CARRIAGE, 3/8-16 X 1, 5, ZAG	2
2	1274322GT	NUT,NYLOCK FLG,3/8-16,F,ZAG	2
3	229304GT	PAD, ARMREST	1
4	236436GT	ROUNDBAR,ALUMINUM,.375X5.00	1
5	1278088GT	SCREW,BHC,TORX PLUS, 1/4-20X3/4,F835,ZAG	12
6	824113GT	WASHER,FLAT,USS,1/4,ZAG	21
7		REF. CONTROLLER,UNIVERSAL ELECTRONIC GTH refer to 405.1	1
8	123561GT	LEV-O-GAGE INDICATOR	1
9	1256125GT	WASHER,FLAT,#12,SAE,HRD,ZAG	4
10	1271302GT	FORMING, ARMREST	1
10-	1271303GT	PLATE, LATCH STRIKER for 1271302	1
10-	1269198GT	SEAL,FOAM,PSA,3/4X1/4 for 1271302	17 inches
11	105759GT	LATCH,COMPRESSION,SMALL	2
12	824206GT	RIVET, STL, STL, DOME, 1/8 X .25, ZAG	4
13	123572GT	HOLE PLUG, 3 IN	1
14	1271304GT	PLATE, PCB COVER	1
15	237933GT	HARNESS, PCB GROUND	1
16	1287128GT	FORMING,PCB MOUNT,EJ	1
16-	123270GT	CLIP,RECEP MOUNT,2,4,6,12 WAY	10
16-	231917GT	CLIP,PLASTIC,RECEP MOUNT,8 WAY	3
16-	87085GT	RIVET,ALUM,P,.188 X .25	14
16-	1257390GT	WASHER,FLAT,#8,SAE,ZAG	1
17	229819GT	PCBA, POWER DISTRIBUTION, ASSY	1
17-	34052GT	RELAY,SPDT,12V(AUTO) PLUG IN**	
17-	237355GT	FUSE, 1 AMP ATC	
18	824080GT	SCREW, HHF, 1/4-20 X 1.25, 8, ZAG	7
19	236280GT	SPACER,NYL .26 X .75 X .375L	6

404.1 Standard Cab Components, View 4

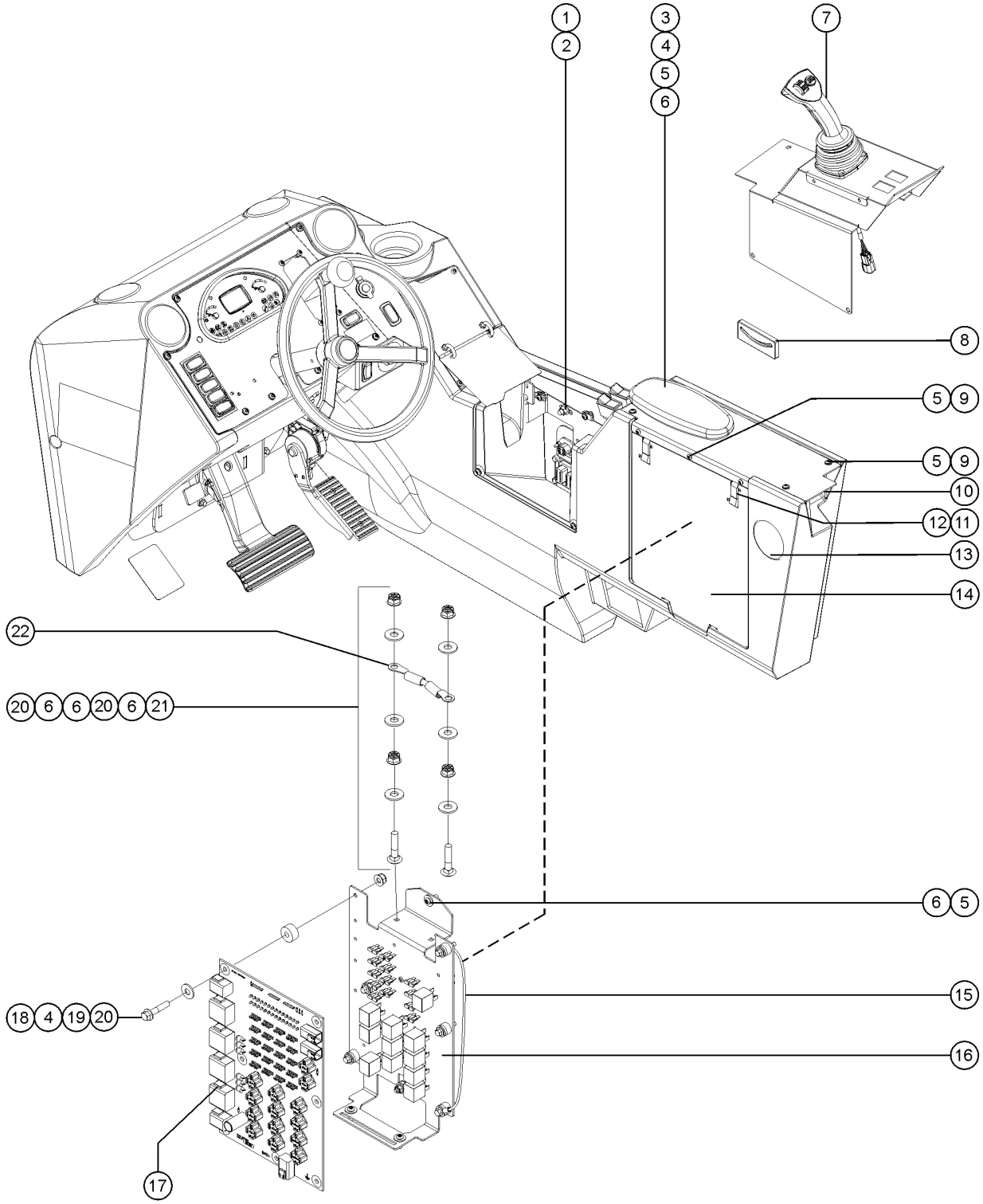

404.1 Standard Cab Components, View 4

Item	*Part No.*	*Description*	*Qty.*
20	1277924GT	NUT,NYLOCK FLG,1/4-20,F,ZAG	12
21	1256463GT	BOLT,CARRIAGE,1/4-20X1.25,5,ZAG	2
22	161444GT	ASSEMBLY, GROUND BUSS	1

405.1 Electronic Joystick Components

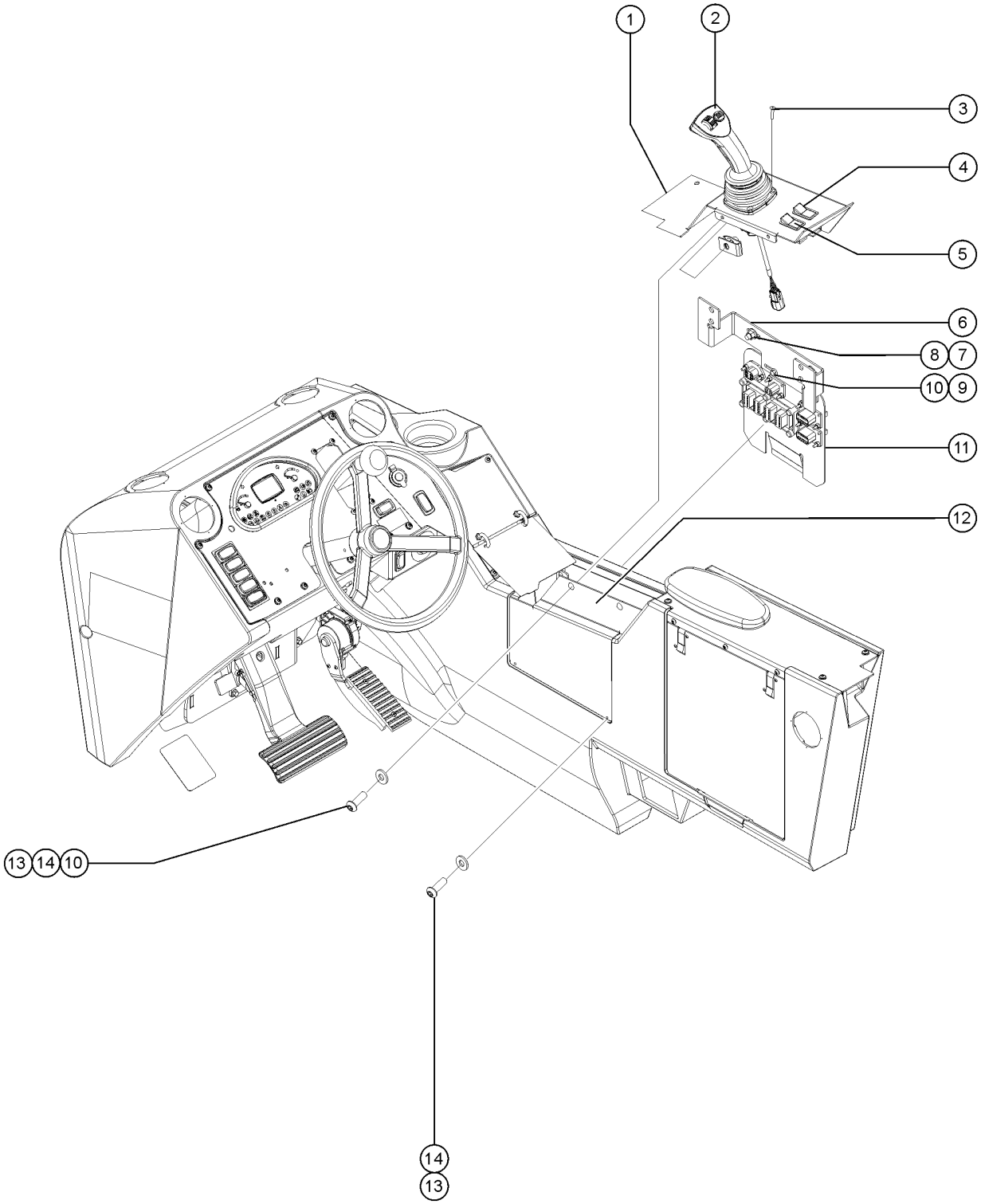

Item	Part No.	Description	Qty.
1	1284347GT	FORMING,TOP,MOUNT,UNIVERSAL CONTROLLER	1
2	1303449GT	CONTROLLER,UNIVERSAL ELECTRONIC GTH	1
3	1257046GT	SCREW,FHS,10-32X1,F835,ZAG	4
4	236346GT	SWITCH, STABILIZER RIGHT	1
5	236345GT	SWITCH, STABILIZER LEFT	1
6	1294958GT	FORMING,CAB SIDE MOUNT	1
7	1274322GT	NUT,NYLOCK FLG,3/8-16,F,ZAG	2
8	824125GT	BOLT, CARRIAGE, 3/8-16 X 1, 5, ZAG	2
9	824078GT	SCREW,HHF,1/4-20X.75,8,ZAG	2
10	56912GT	SPRING CLIP,1/4-20,.025-.15X.54,ZAG	2
11	1294959GT	FORMING, CONNECTORS BULKHEAD	1
12	1284346GT	FORMING,SIDE,MOUNT,UNIVERSAL CONTROLLER	1
13	1278088GT	SCREW,BHC,TORX PLUS, 1/4-20X3/4,F835,ZAG	5
14	1256125GT	WASHER,FLAT,#12,SAE,HRD,ZAG	5

406.1 Enclosed Cab Assembly Option, View 1

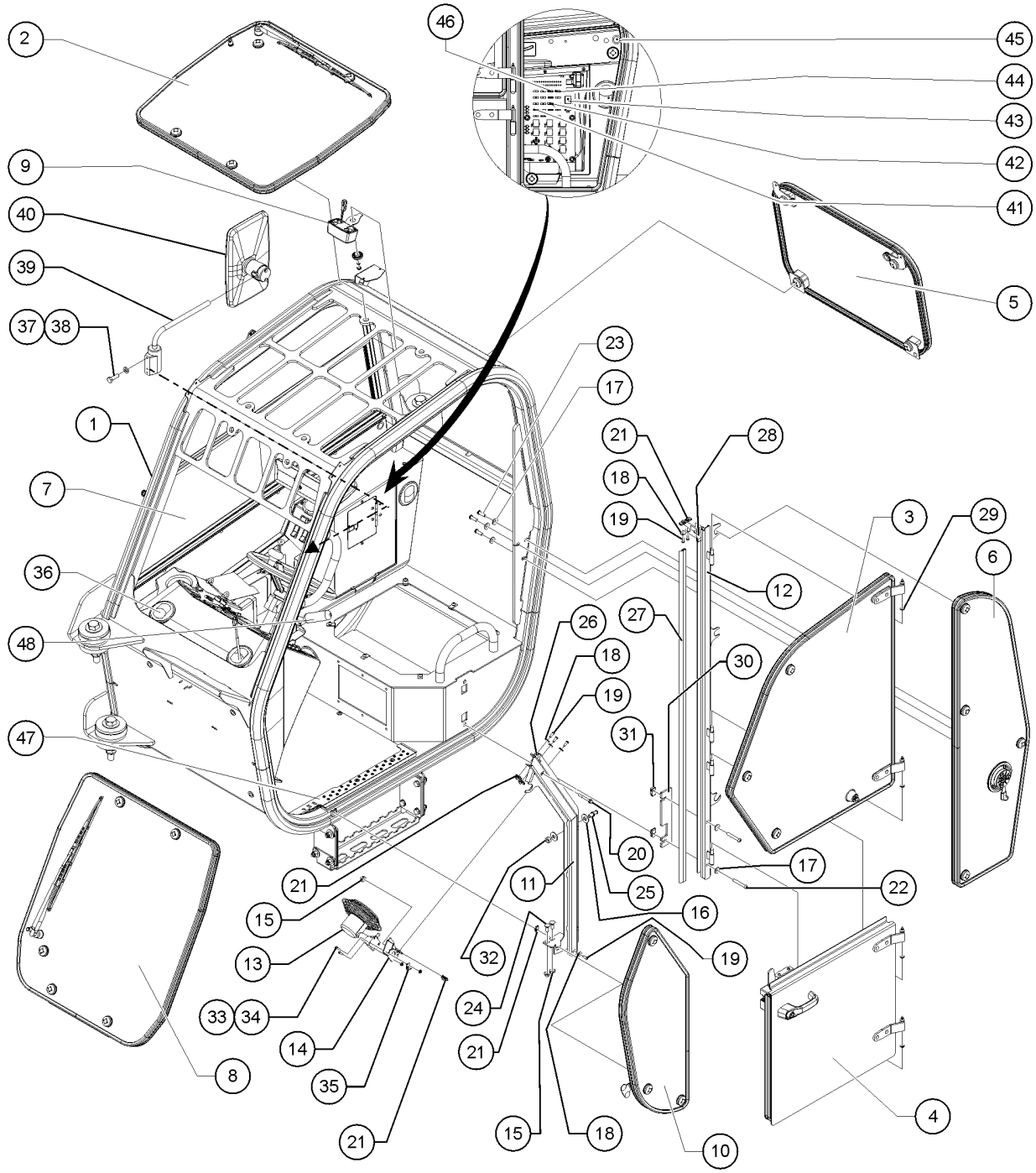

406.1 Enclosed Cab Assembly Option, View 1

Item	Part No.	Description	Qty.
-		Ref. WELDMENT,CAB refer to 401.1	1
1	1294729GT	ASSEMBLY,CAB GTH	1
2	230008GT	ASSEMBLY, SKYLIGHT GTH refer to 408.1	1
3	231118GT	ASSY,UPPER DOOR,ENCL.CAB refer to 412.1	1
4	236667GT	ASSY,LOWER DOOR,ENCL.CAB refer to 414.1	1
5	130164GT	ASSEMBLY, REAR WINDOW refer to 410.1	1
6	236782GT	ASSEMBLY, RR WINDOW refer to 413.1	1
7	231330GT	ASSEMBLY, RH WINDOW, GTH refer to 409.1	1
8	230043GT	ASSEMBLY,WINDSHIELD,GTH refer to 407.1	1
9	230030GT	ASSEMBLY, DOME LIGHT	1
10	130243GT	ASSY,LEFT,FRONT,WINDOW refer to 411.1	
11	1253977GT	WELDMENT,SLAM POST	1
12	1253978GT	WELDMENT,DOOR POST (TRF BLACK)	1
13	230029GT	ASSY, DEFROSTER FAN	1
13-	234859GT	HARNESS, CAB FAN	1
13-	80220GT	SWITCH,TOGGLE,SPDT***	1
14	1253979GT	FORMING,DEFROST FAN MOUNT	1
15	824029GT	NUT, TL FLG, 3/8-16, G, ZAG	3
16	1255760GT	WASHER,FLAT,1/2,USS,ZAG	2
17	1255758GT	WASHER,FLAT,3/8,USS,ZAG	5
18	824113GT	WASHER,FLAT,USS,1/4,ZAG	8
19	1278088GT	SCREW,BHC,TORX PLUS, 1/4-20X3/4,F835,ZAG	6
20	824095GT	SCREW, HHF, 3/8-16 X 3, 8, ZAG	1
21	56912GT	SPRING CLIP,1/4-20,.025-.15X.54,ZAG	6
22	1256474GT	SCREW,BHC,3/8-16X2.5,F835,ZAG	2
23	1255630GT	SCREW,HHC,3/8-16X1.5,8,ZAG	3
24	824125GT	BOLT, CARRIAGE, 3/8-16 X 1, 5, ZAG	2
25	130241GT	POST,STRIKER	1

406.1 Enclosed Cab Assembly Option, View 1

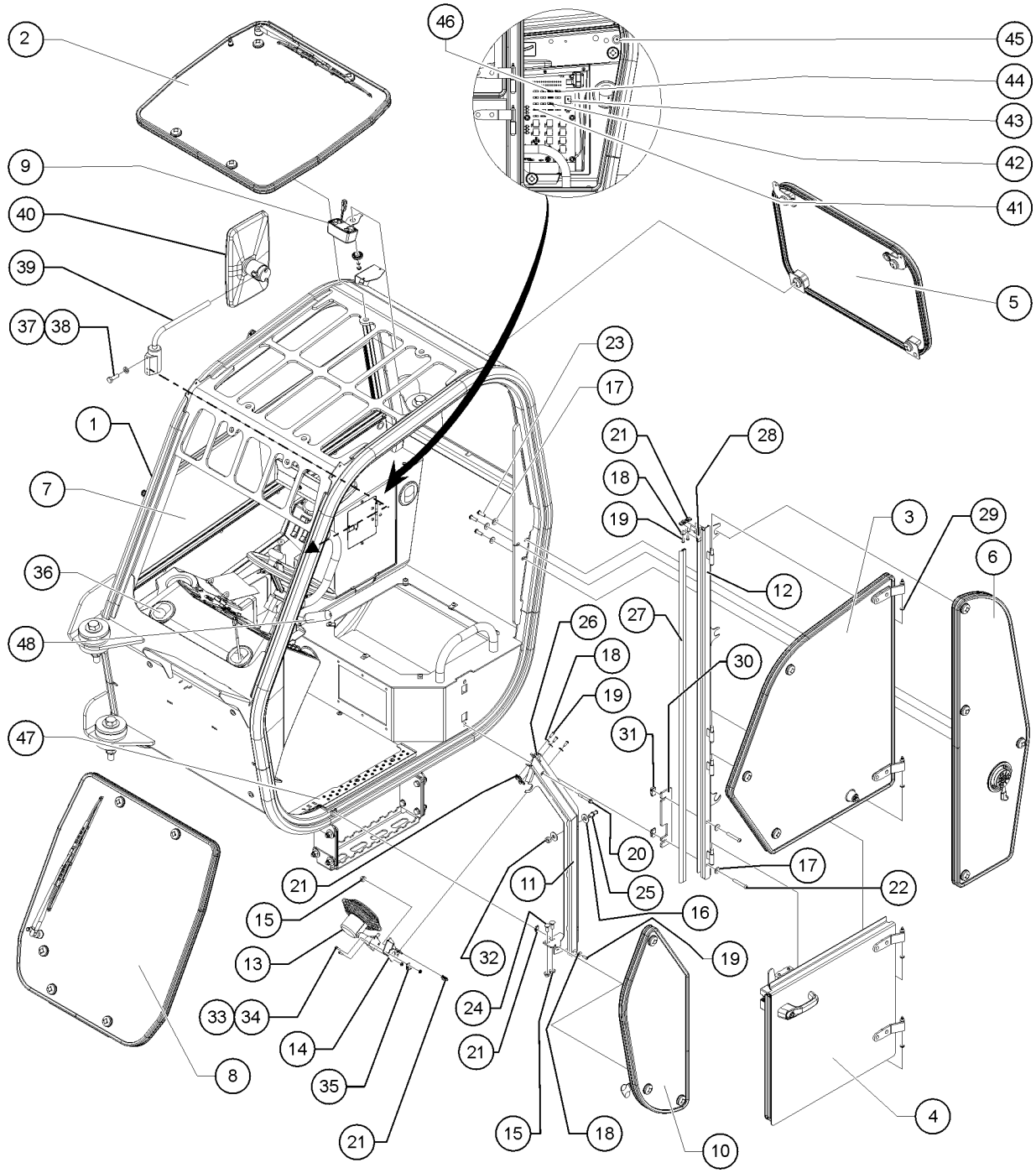

406.1 Enclosed Cab Assembly Option, View 1

Item	Part No.	Description	Qty.
25-	130301GT	NUT,M12-1.00 for 130241	
26	130259GT	SEAL,J HOOK	5 inches
27	130259GT	SEAL,J HOOK	60 inches
28	130259GT	SEAL,J HOOK	3 inches
29	130327GT	WASHER,THRUST,4X.6X.1	4
30	214715GT	PLATE,DOOR POST SPACER CLOSEOUT	1
31	29868GT	SPRING CLIP,3/8-16,.05-.20X.73,ZAG	2
32	1256470GT	NUT,M12-1.0,DIN934,10,ZAB	1
33	1256477GT	SCREW, SHC, 10-32X.75,A574,ZAG	4
34	1283005GT	NUT,NYLOCK FLG,10-32,A,ZAG	4
35	45470GT	CLAMP,0.31,#5 X 1/4,RUB CUSH	1
36	229303GT	VENT,3" DEFROSTER	6
37	1256450GT	SCREW,HHC,M6-1.0X20,DIN933,10.9,ZAB	3
38	825355GT	WASHER,FLAT,M6,DIN125,ZAB	3
39	1279209GT	MIRROR ARM, CAB, GTH	1
40	1279208GT	MIRROR, CAB, GTH	1
41	237355GT	FUSE, 1 AMP ATC	1
42	62822GT	FUSE, 15 AMP, ATC	1
43	34052GT	RELAY,SPDT,12V(AUTO) PLUG IN**	1
44	123198GT	FUSE,5 AMP	1
45	229302GT	CAP PLUG, 1"	1
46	123688GT	FUSE,10 AMP,ATC	1
47	1254146GT	FORMING, FLOORMAT GUARD	1
48	7-125-05GT	SHIFTER ASSEMBLY	1

407.1 Enclosed Cab Assembly Option, View 2

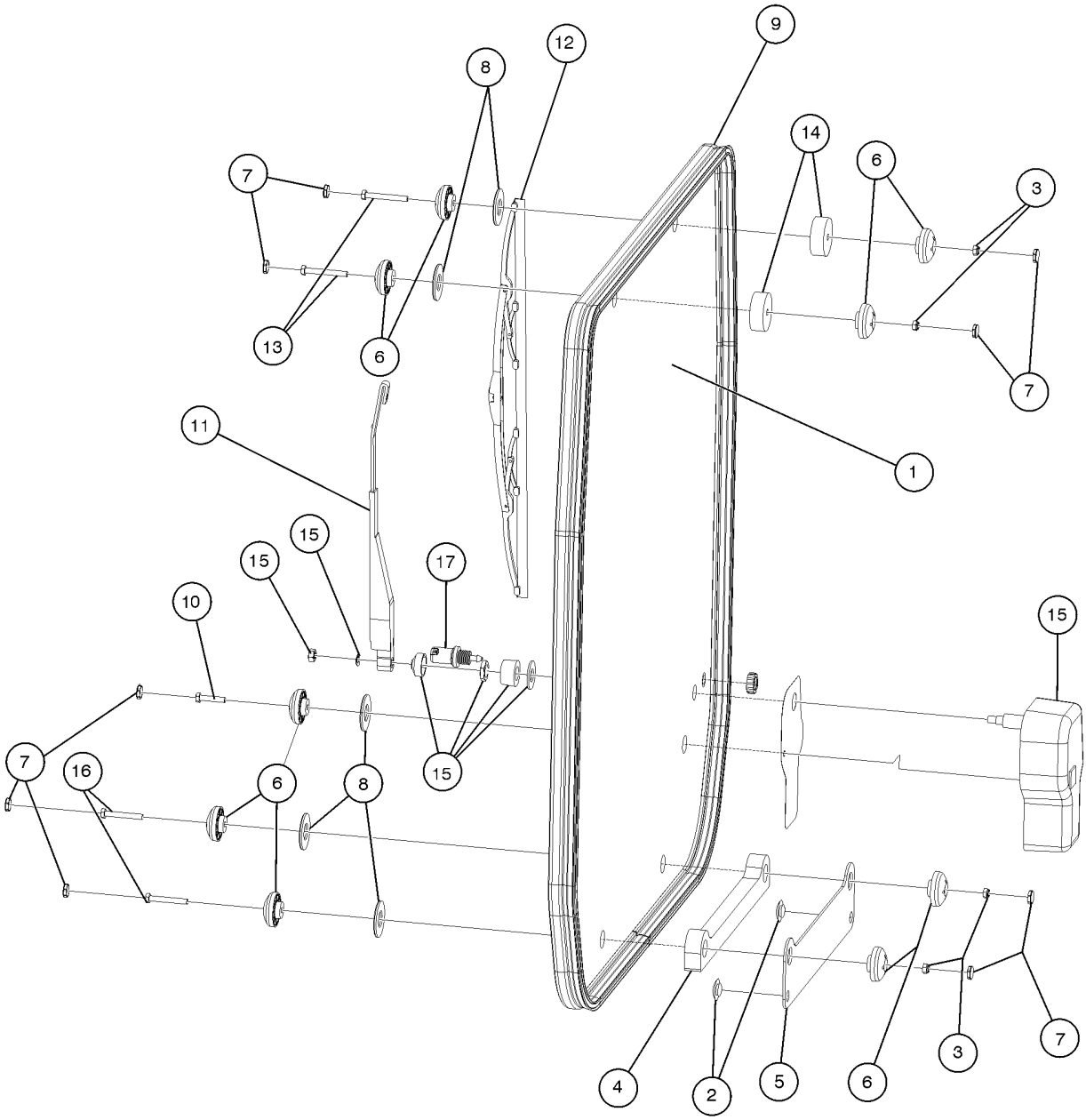

407.1 Enclosed Cab Assembly Option, View 2

Item	Part No.	Description	Qty.
A	236350GT	SWITCH, WINDSHIELD WIPER/WSHER	1
1	230044GT	GLASS,FRONT WINDSHIELD	1
2	47478GT	BUMPER, RUBBER, 1"OD X .461H	2
3	1256455GT	NUT,TL,M6-1.0,DIN980,10,ZAB	4
4	237667GT	HDPE,FRONT WINDOW SPACER	1
5	1253974GT	PLATE,WINDSHIELD RETAINER	1
6	130123GT	BUSHING,WINDOW FASTENER	9
7	130124GT	CAP,WINDOW BUSHING	9
8	130189GT	SPACER,GLASS BUSHING	5
9	130163-11892GT	WEATHERSTRIP,DOUBLE BULB, 118.92"LG	1
10	1256451GT	SCREW,HHC,M6-1.0X30,DIN931,10.	1
11	130160GT	WIPER ARM,14"	1
12	130208GT	WIPER BLADE,20"	1
13	1256453GT	SCREW,HHC,M6-1.0X50,DIN931,10.	2
14	230009GT	SPACER,WINDOW	2
15	130198GT	WIPER MOTOR	1
16	1256452GT	SCREW,HHC,M6-1.0X45,DIN931,10.	2
17	130203GT	NOZZLE,WINDSHIELD WASHER	1

408.1 Enclosed Cab Assembly Option, View 3

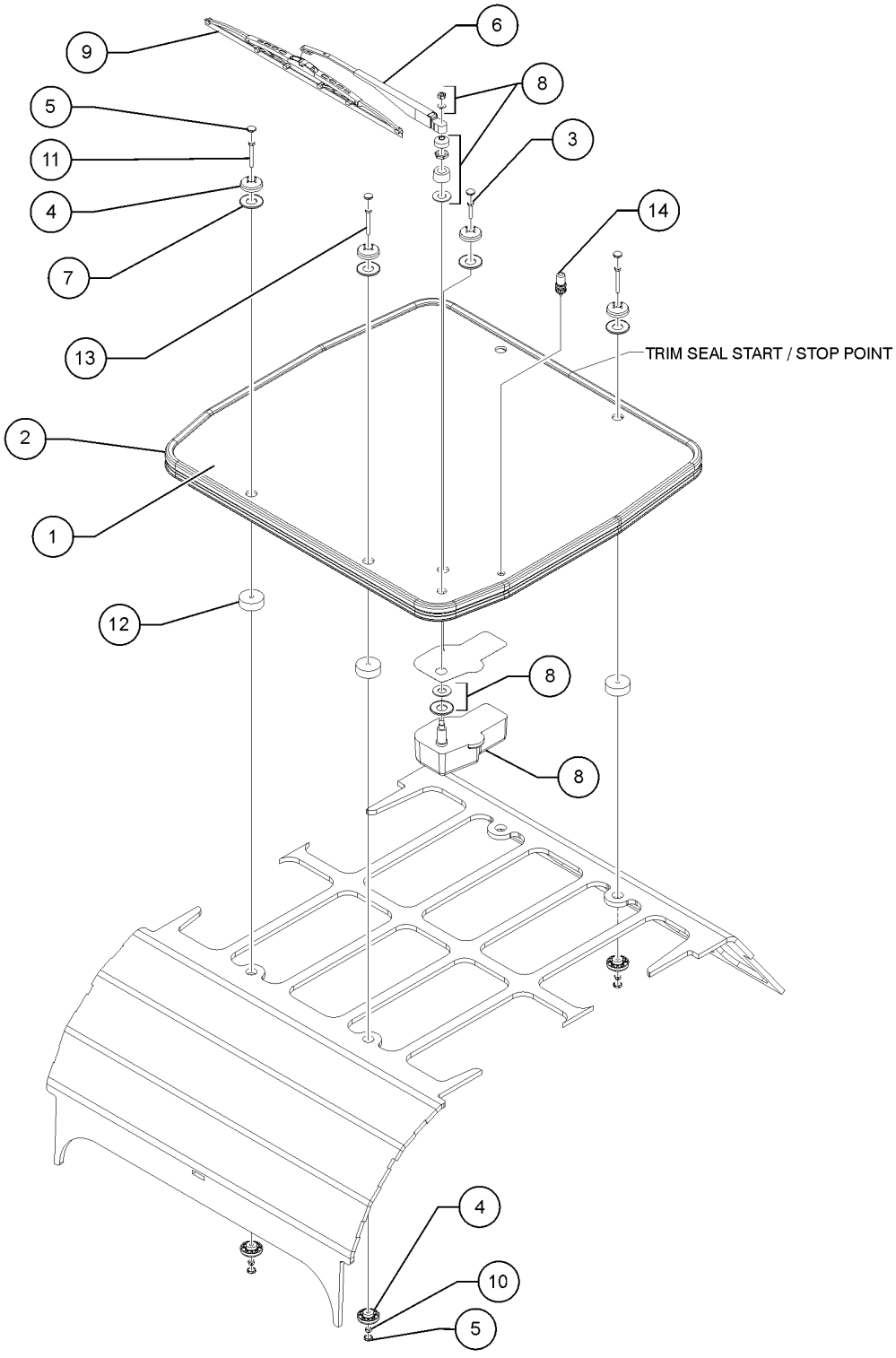

408.1 Enclosed Cab Assembly Option, View 3

Item	Part No.	Description	Qty.
A	236351GT	SWITCH, SKYLIGHT WIPER/WASHER	1
1	230007GT	GLASS,SKYLIGHT,GTH	1
2	130163-10844GT	WEATHERSTRIP,DOUBLE BULB, 108.44"LG	1
3	1256451GT	SCREW,HHC,M6-1.0X30,DIN931,10.	1
4	130123GT	BUSHING,WINDOW FASTENER	9
5	130124GT	CAP,WINDOW BUSHING	9
6	130160GT	WIPER ARM,14"	1
7	130189GT	SPACER,GLASS BUSHING	5
8	130198GT	WIPER MOTOR	1
9	130208GT	WIPER BLADE,20"	1
10	1256455GT	NUT,TL,M6-1.0,DIN980,10,ZAB	4
11	1256453GT	SCREW,HHC,M6-1.0X50,DIN931,10.	3
12	230009GT	SPACER,WINDOW	4
13	1256454GT	SCREW,HHC,M6-1.0X55,DIN931,10.9,ZAB	1
14	130203GT	NOZZLE,WINDSHIELD WASHER	1

409.1 Enclosed Cab Assembly Option, View 4

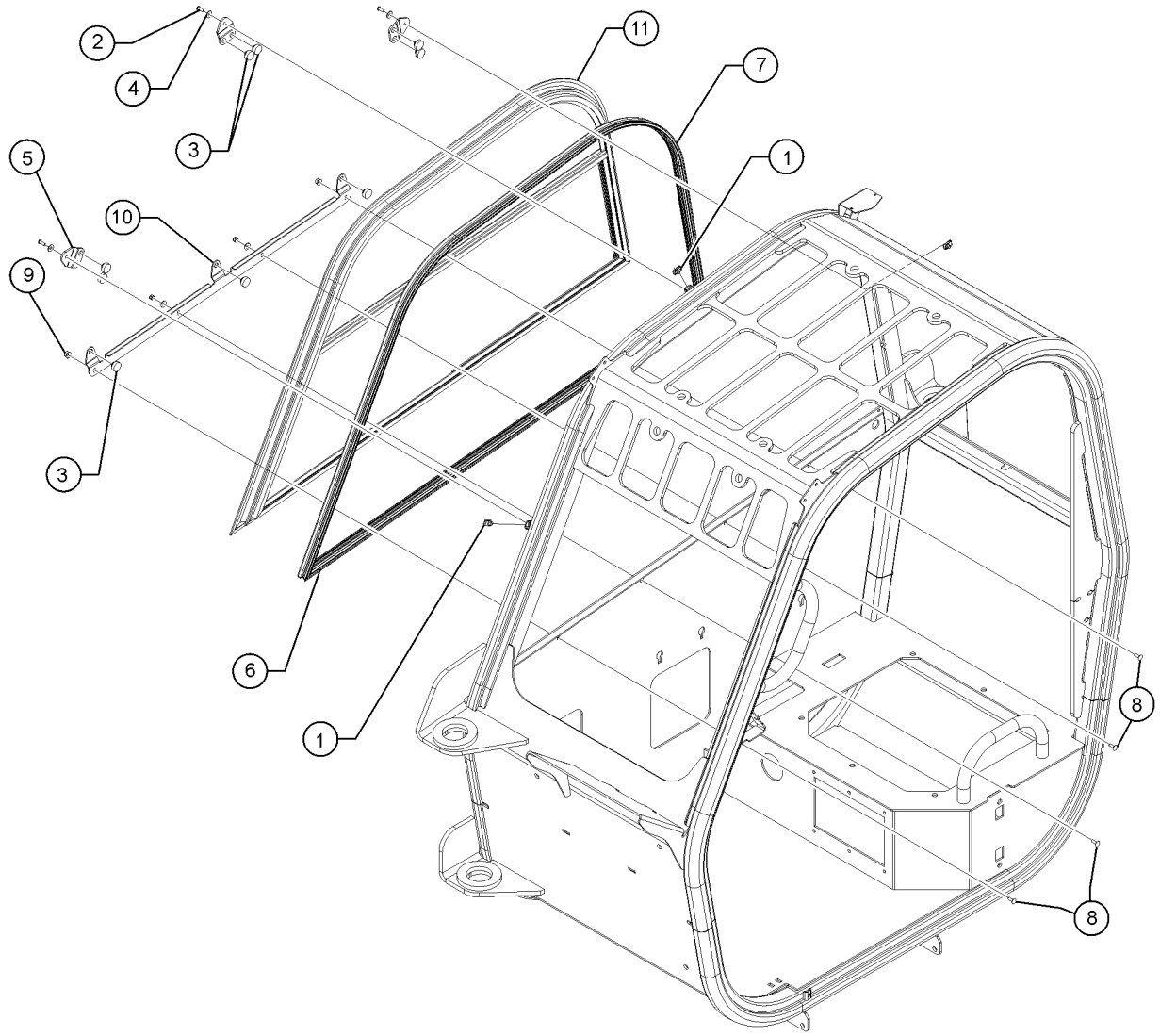

409.1 Enclosed Cab Assembly Option, View 4

Item	Part No.	Description	Qty.
1	56912GT	SPRING CLIP,1/4-20,.025-.15X.54,ZAG	3
2	1278088GT	SCREW,BHC,TORX PLUS, 1/4-20X3/4,F835,ZAG	3
3	43392GT	BUMPER,BATTERY BOX & RAILS	9
4	824113GT	WASHER,FLAT,USS,1/4,ZAG	3
5	1253972GT	FORMING,GLASS RETAINER,SMALL	3
6	130163-5763GT	WEATHERSTRIP,DOUBLE BULB, 57.63"LG	1
7	130163-9556GT	WEATHERSTRIP,DOUBLE BULB, 95.56"LG	1
8	824124GT	BOLT, CARRIAGE, 1/4-20 X .75, 5, ZAG	4
9	824027GT	NUT, TL FLG, 1/4-20, G, ZAG	4
10	1314001GT	FORMING, GLASS RETAINER, LARGE, PNTD	1
11	230045GT	WINDOW, RH SLIDING GTH	1
11-	218489GT	KNOB, LOCKING	

410.1 Enclosed Cab Assembly Option, View 5

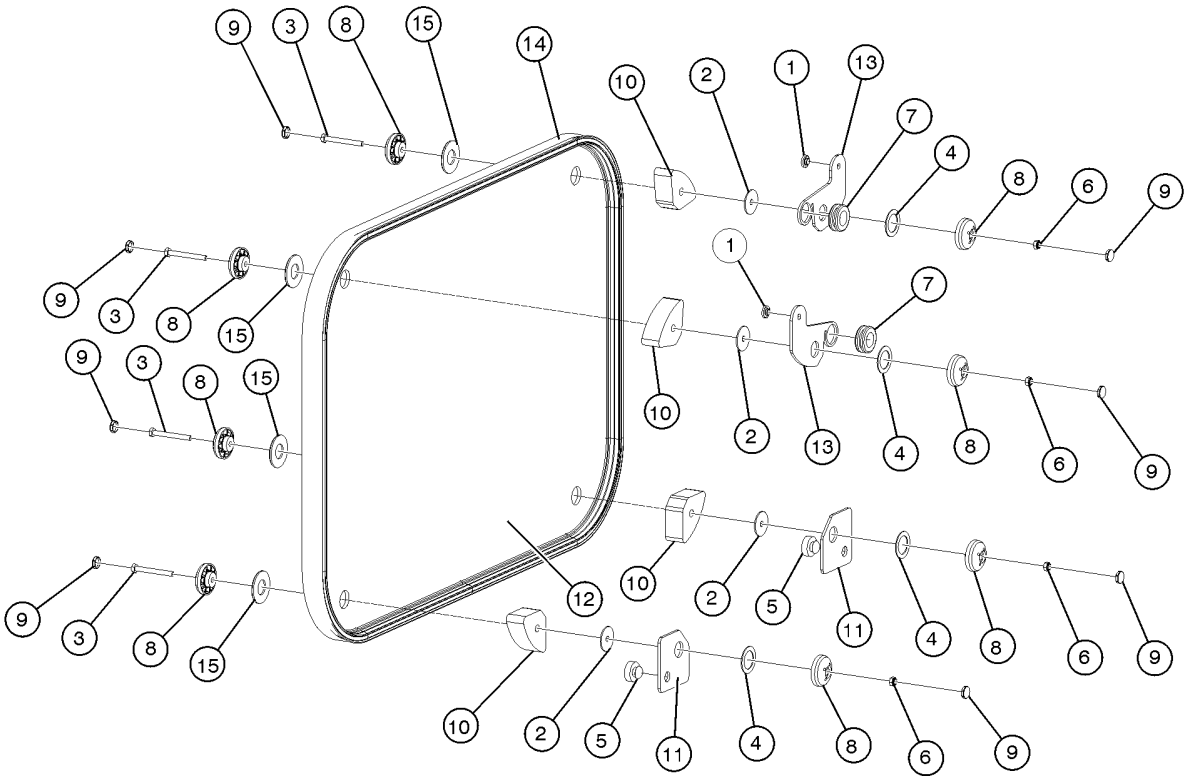

410.1 Enclosed Cab Assembly Option, View 5

Item	Part No.	Description	Qty.
1	11890GT	GLIDE BUTTON,SIDE,GLL,.100 TK	2
2	824119GT	WASHER, FLAT, .25 X 1.25 X .062, ZAG	4
3	1256454GT	SCREW,HHC,M6-1.0X55,DIN931,10.9,ZAB	4
4	1256459GT	WASHER,SHIM,.938X1.37X0.048,ZA	4
5	43392GT	BUMPER,BATTERY BOX & RAILS	2
6	1256455GT	NUT,TL,M6-1.0,DIN980,10,ZAB	4
7	60584GT	GROMMET,RUBBER .75 X .19 X 1**	2
8	130123GT	BUSHING,WINDOW FASTENER	8
9	130124GT	CAP,WINDOW BUSHING	8
10	130126GT	SPACER,CAB WINDOW	4
11	1253969GT	PLATE,WINDOW RETAINER	2
12	130161GT	GLASS,REAR WINDOW	1
13	1253970GT	PLATE,WINDOW LEVER	2
14	130163-9500GT	WEATHERSTRIP,DOUBLE BULB, 95"LG	1
15	130189GT	SPACER,GLASS BUSHING	4

411.1 Enclosed Cab Assembly Option, View 6

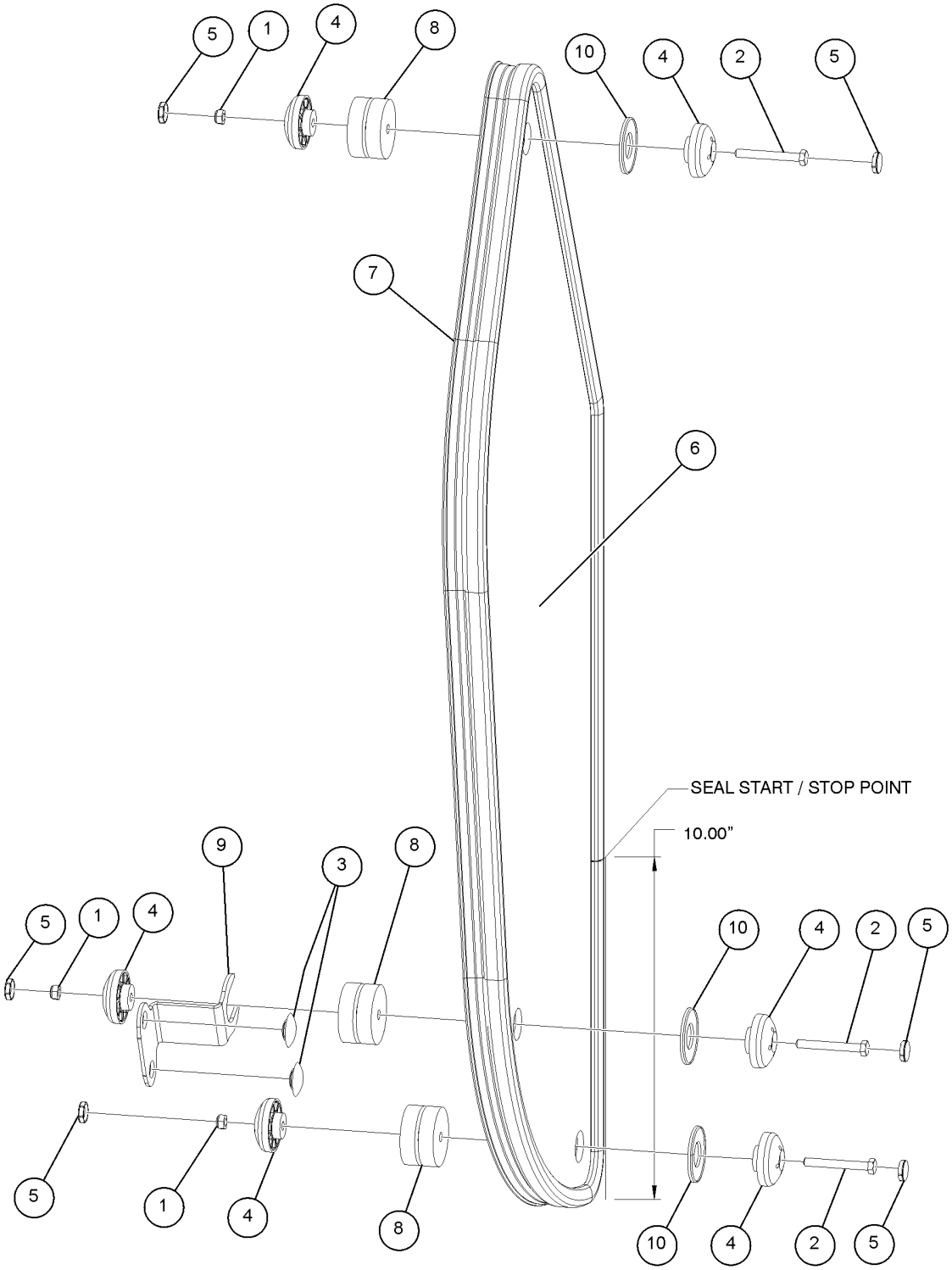

411.1 Enclosed Cab Assembly Option, View 6

Item	Part No.	Description	Qty.
1	1256455GT	NUT,TL,M6-1.0,DIN980,10,ZAB	
2	1256453GT	SCREW,HHC,M6-1.0X50,DIN931,10.	
3	47478GT	BUMPER, RUBBER, 1"OD X .461H	
4	130123GT	BUSHING,WINDOW FASTENER	
5	130124GT	CAP,WINDOW BUSHING	
6	130132GT	GLASS,FRONT SIDE WINDOW	
7	130163-7983GT	WEATHERSTRIP,DOUBLE BULB, 79.83"LG	1
8	130134GT	SPACER,WINDOW	
9	1253976GT	FORMING,GLASS RETAINER	
10	130189GT	SPACER,GLASS BUSHING	

412.1 Enclosed Cab Assembly Option, View 7

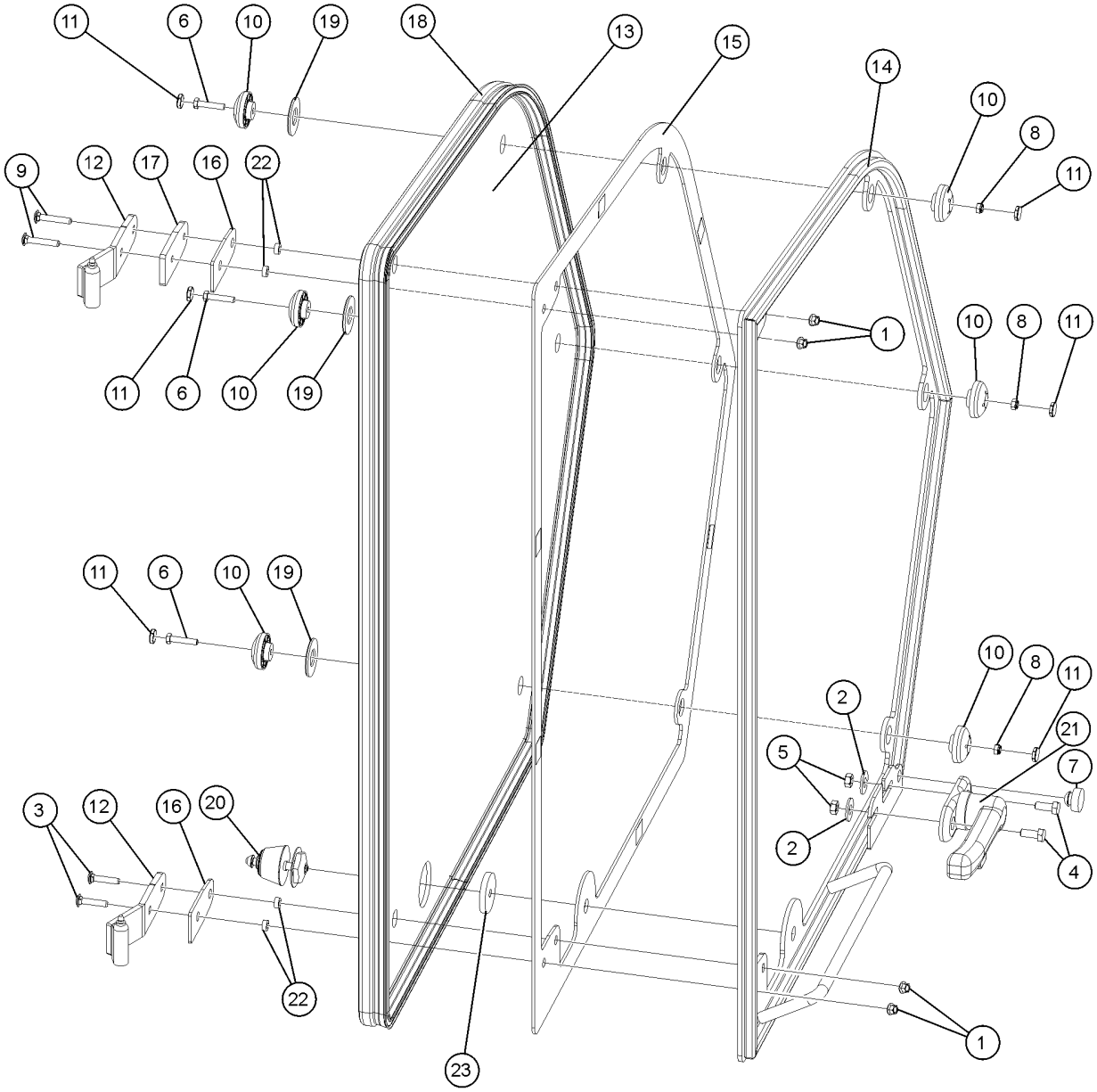

412.1 Enclosed Cab Assembly Option, View 7

Item	Part No.	Description	Qty.
1	824027GT	NUT, TL FLG, 1/4-20, G, ZAG	4
2	1255758GT	WASHER,FLAT,3/8,USS,ZAG	2
3	1256463GT	BOLT,CARRIAGE,1/4-20X1.25,5,ZAG	2
4	824135GT	SCREW,HHC,M8-1.25X20,DIN933,10.9,ZAB	2
5	1256456GT	NUT,TL,M8-1.25,DIN980,10,ZAB	2
6	1256451GT	SCREW,HHC,M6-1.0X30,DIN931,10.	3
7	43392GT	BUMPER,BATTERY BOX & RAILS	1
8	1256455GT	NUT,TL,M6-1.0,DIN980,10,ZAB	3
9	1255756GT	BOLT,CARRIAGE,1/4-20X1.5,5,ZAG	2
10	130123GT	BUSHING,WINDOW FASTENER	6
11	130124GT	CAP,WINDOW BUSHING	6
12	1253962GT	WELDMENT,FEMALE HINGE	2
13	231119GT	WINDOW, DOOR	1
14	1253967GT	WELDMENT,WINDOW DOOR	1
15	231123GT	GASKET, DOOR WINDOW	1
16	130258GT	GASKET,HINGE	2
17	130147GT	SPACER,HINGE	1
18	130163-12591GT	WEATHERSTRIP,DOUBLE BULB, 125.91"LG	1
19	130189GT	SPACER,GLASS BUSHING	3
20	130254GT	POST,HOLDBACK LATCH	1
21	640696GT	INTERNAL GLASS HANDLE	1
22	1302074GT	SPACER,NYLON,1/2 X .260 X 3/16	4
23	237067GT	SPACER, ANCHOR	1

413.1 Enclosed Cab Assembly Option, View 8

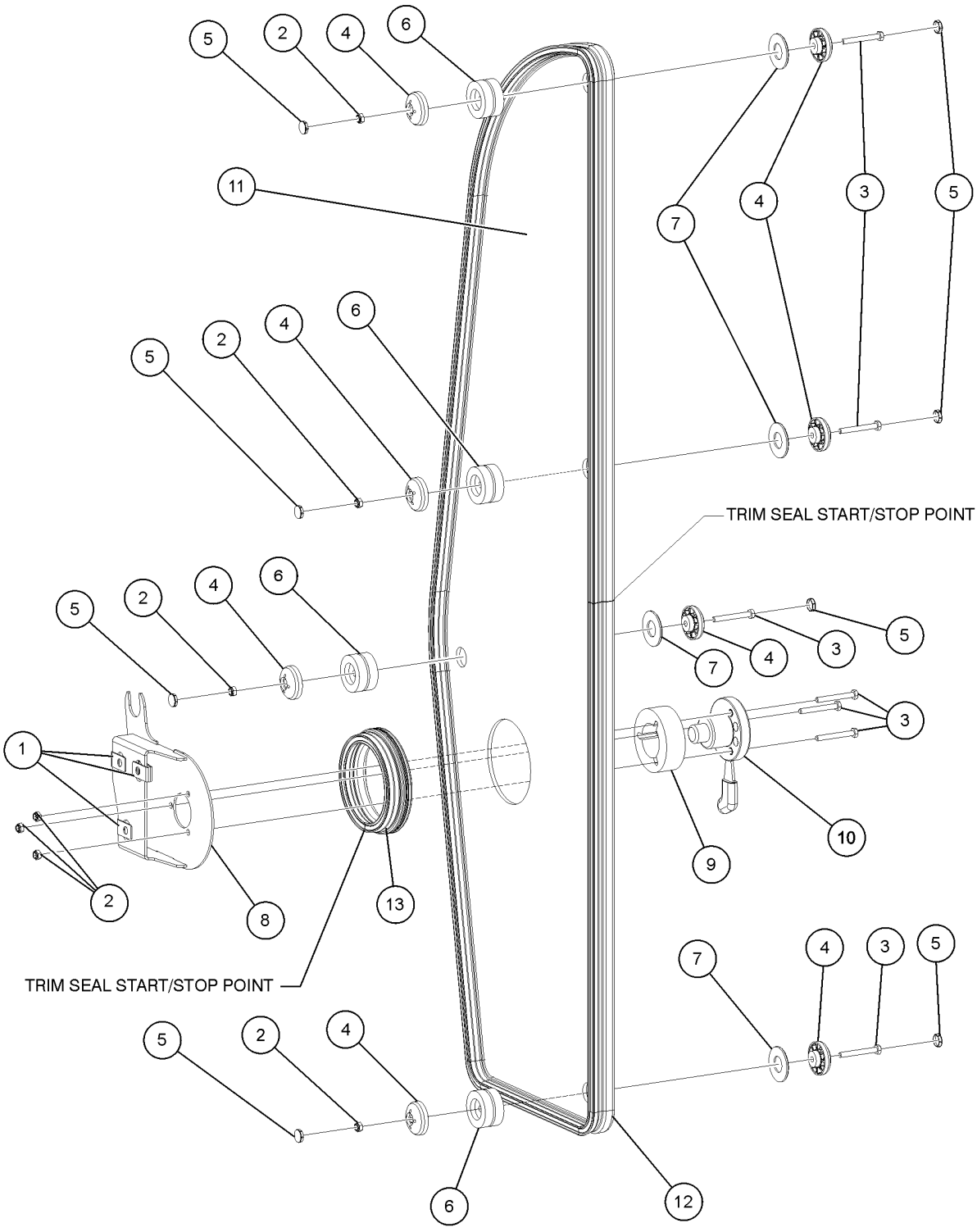

413.1 Enclosed Cab Assembly Option, View 8

Item	Part No.	Description	Qty.
1	29868GT	SPRING CLIP,3/8-16,.05-.20X.73,ZAG	3
2	1256455GT	NUT,TL,M6-1.0,DIN980,10,ZAB	7
3	1256453GT	SCREW,HHC,M6-1.0X50,DIN931,10.	7
4	130123GT	BUSHING,WINDOW FASTENER	8
5	130124GT	CAP,WINDOW BUSHING	8
6	130134GT	SPACER,WINDOW	4
7	130189GT	SPACER,GLASS BUSHING	4
8	1253971GT	WELDMENT, HOLDBACK MOUNTING	1
9	130215GT	SPACER,HOLDBACK MOUNT	1
10	130220GT	HOLDBACK LATCH	1
11	236783GT	GLASS, SIDE, LR	1
12	130163-12150GT	WEATHERSTRIP,DOUBLE BULB, 121.50"LG	1
13	130163-1253GT	WEATHERSTRIP,DOUBLE BULB, 12.53"LG	1

414.1 Enclosed Cab Assembly Option, View 9

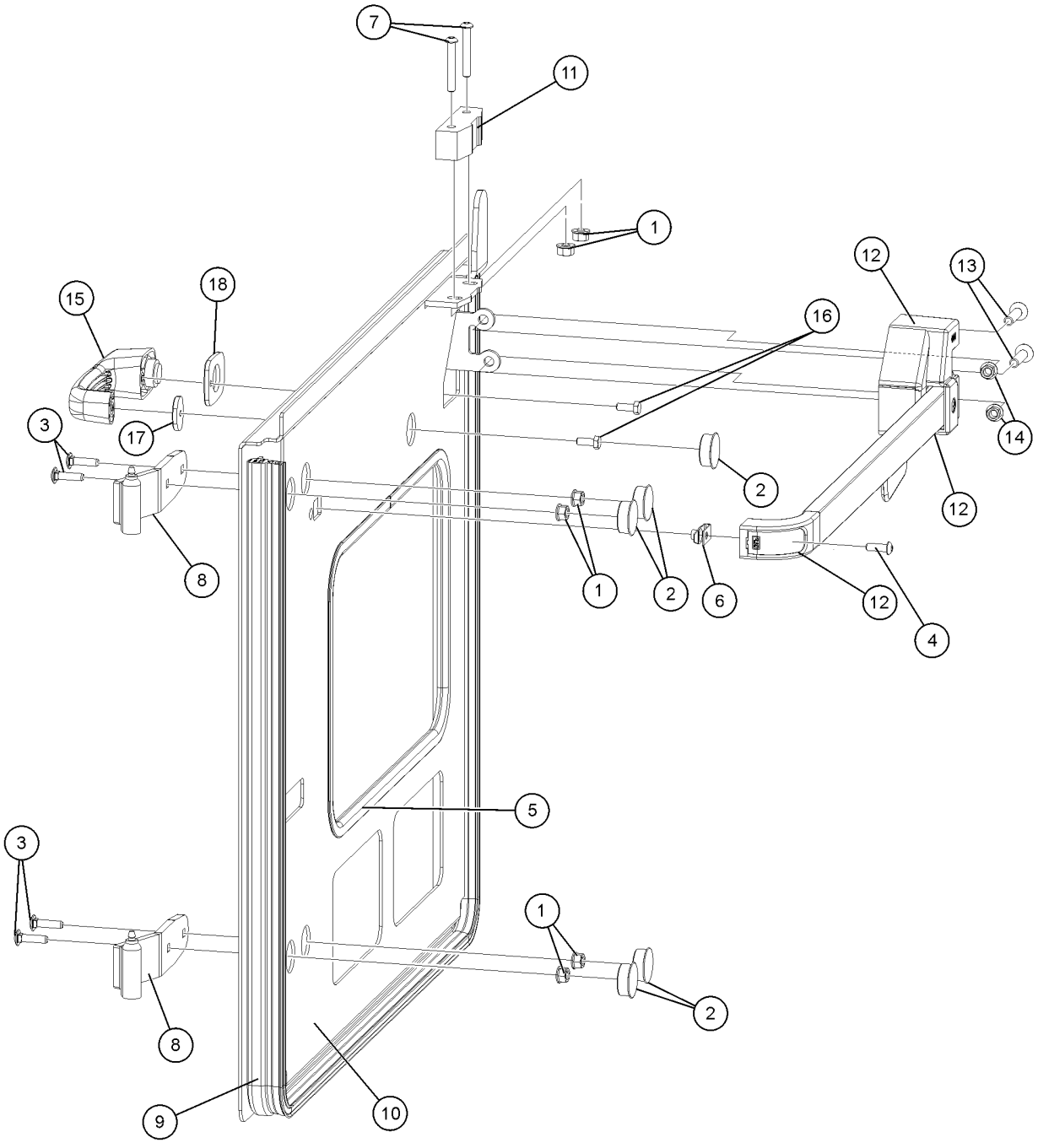

414.1 Enclosed Cab Assembly Option, View 9

Item	Part No.	Description	Qty.
1	1277924GT	NUT,NYLOCK FLG,1/4-20,F,ZAG	6
2	7-144-09GT	HOLE PLUG,1 1/8 DIA.	5
3	1256127GT	BOLT,CARRIAGE,1/4-20X1",GR 5,ZAG	4
4	1278088GT	SCREW,BHC,TORX PLUS, 1/4-20X3/4,F835,ZAG	1
5	46718GT	TRIMLOCK,BLACK,3/16	1
6	56912GT	SPRING CLIP,1/4-20,.025-.15X.54,ZAG	1
7	1256176GT	SCREW,BHC,1/4-20X1.75,F835,ZAG	2
8	1253962GT	WELDMENT,FEMALE HINGE	2
9	130163-7313GT	WEATHERSTRIP,DOUBLE BULB, 73.13"LG	1
10	1253968GT	WELDMENT,CAB DOOR	1
11	130223GT	MOUNT,LATCH	1
12	214437GT	LATCH, INNER BAR	1
13	1256458GT	SCREW,FHS,M8-1.25X35,DIN7991,1	2
14	1283014GT	NUT,NYLOCK FLG,M8-1.25,DIN6926,10,ZAB	2
15	1260061GT	HANDLE,LHANDLE,LATCH,GOLDENROD	1
16	824131GT	SCREW,HHF,M6-1.0X16,DIN6921,10.9,ZAB	2
17	215772GT	GASKET, OUTER HANDLE, SM	1
18	215771GT	GASKET, OUTER HANDLE, LG	1

415.1 Washer Bottle Assembly

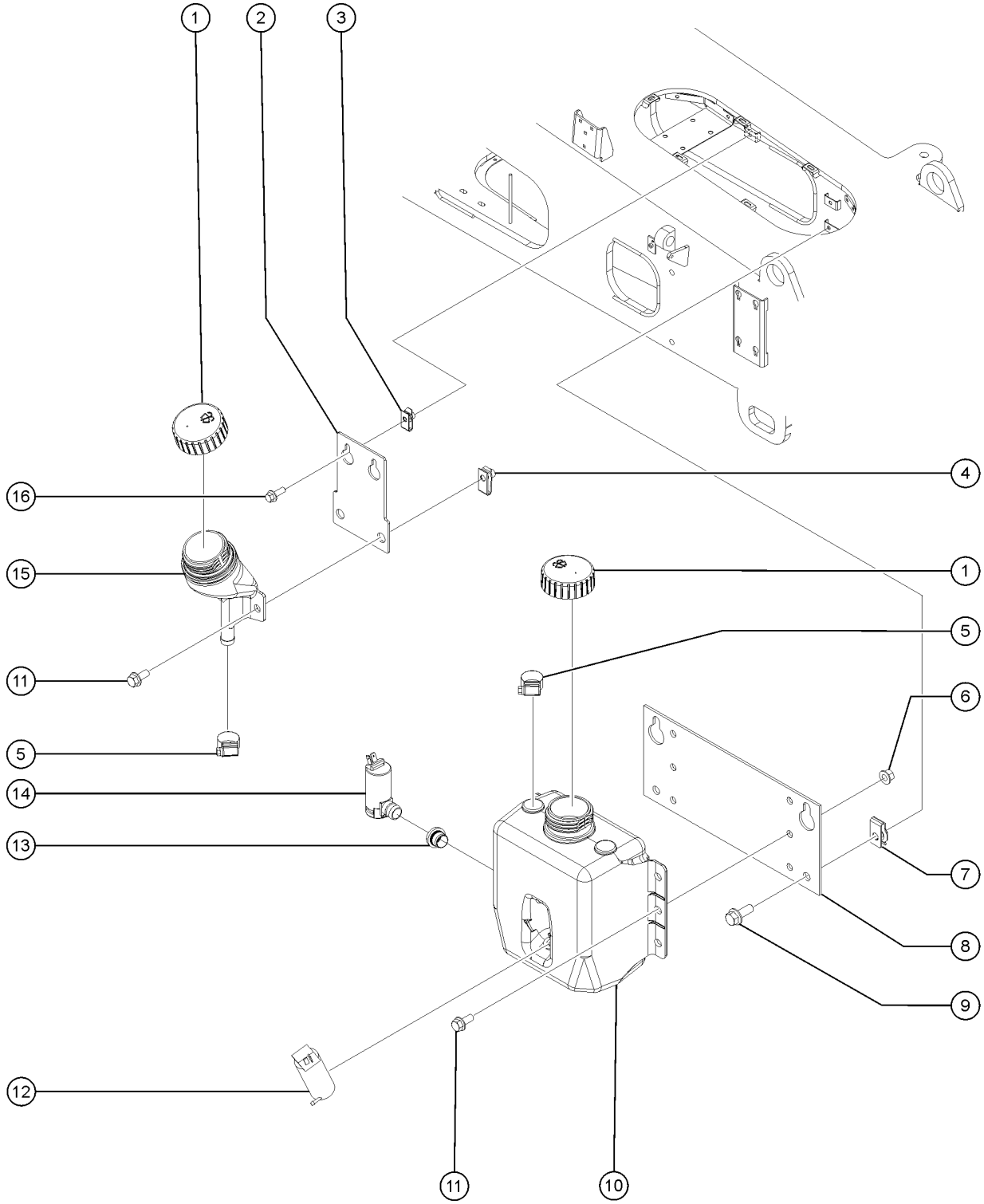

415.1 Washer Bottle Assembly

Item	Part No.	Description	Qty.
1	1303387GT	CAP,REMOTE FILL,GTH1056	2
2	1303082GT	BRACKET,REMOTE FILL,GTH1056	1
3	56912GT	SPRING CLIP,1/4-20,.025-.15X.54,ZAG	4
4	36456GT	SPRING CLIP,5/16-18,.025-.15X.	2
5	46131GT	CLAMP,HOSE,.63" - 1.0" X .5"	2
6	1274167GT	NUT,NYLOCK FLG,5/16-18,F,ZAG	6
7	29868GT	SPRING CLIP,3/8-16,.05-.20X.73,ZAG	4
8	1303080GT	BRACKET,WASHER BOTTLE,GTH1056	1
9	824090GT	SCREW,HHF,3/8-16X1,8,ZAG	4
10	1298868GT	RESERVOIR, WINDSHIELD WASHER, 3 GALLON	1
11	824085GT	SCREW, HHF, 5/16-18 X .75, 8, ZAG	6
12	1303922GT	PUMP,12V WASHER	1
13	1304709GT	GROMMET,3/16",BLACK	1
14	1304806GT	PUMP,WASHER BOTTLE,12V	1
15	1303388GT	INLET,REMOTE FILL,GTH1056 No longer available	1
16	824078GT	SCREW,HHF,1/4-20X.75,8,ZAG	2

416.1 Rear Backup Camera, Components

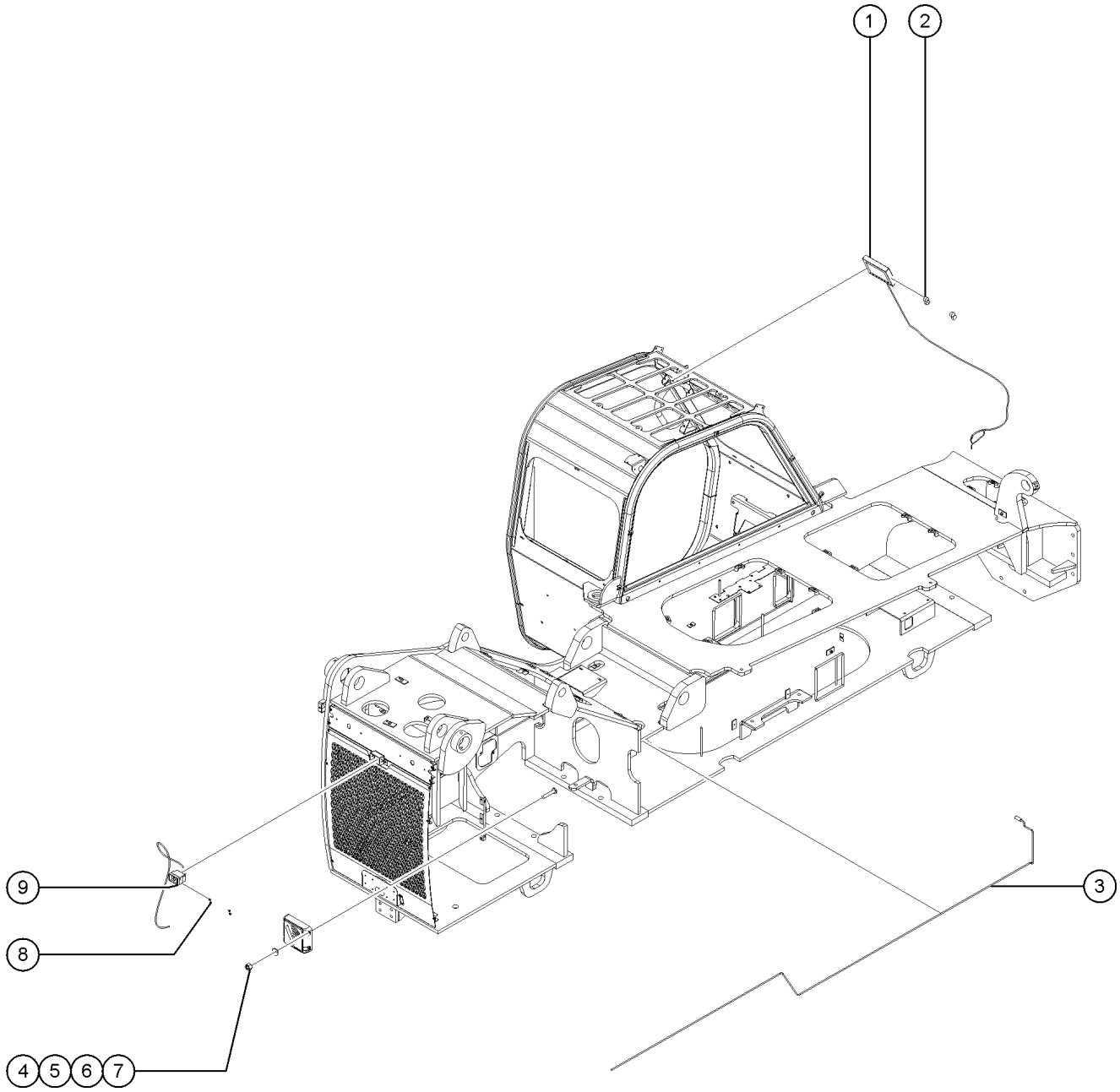

416.1 Rear Backup Camera, Components

Item	*Part No.*	*Description*	*Qty.*
A	1286185GT	COMPONENTS, REAR BACKUP CAMERA	
-	53471GT	WIRE LOOM,3/8 NYLON,HI TEMP Qty 1, 300 inches	1 inches
1	1286062GT	DISPLAY, BACKUP MONITOR	1
2	1286241GT	KIT,HARDWARE,BACKUP MONITOR	1
3	1286085GT	WIRE,BACKUP CAMERA	1
4	1277857GT	NUT,NYLOCK,10-24,A,SS	4
5	1278285GT	WASHER,FLAT,#10,USS,SS	4
6	1289724GT	SENSOR,REAR PROX ALARM,SENTRY	1
7	1277856GT	SCREW,PHPM,10-24X1,SS	4
8	1286247GT	KIT,HARDWARE,BACKUP CAMERA	1
9	1286083GT	CAMERA,BACKUP	1

501.1 Deutz TCD3.6, T3 Engine, View 1

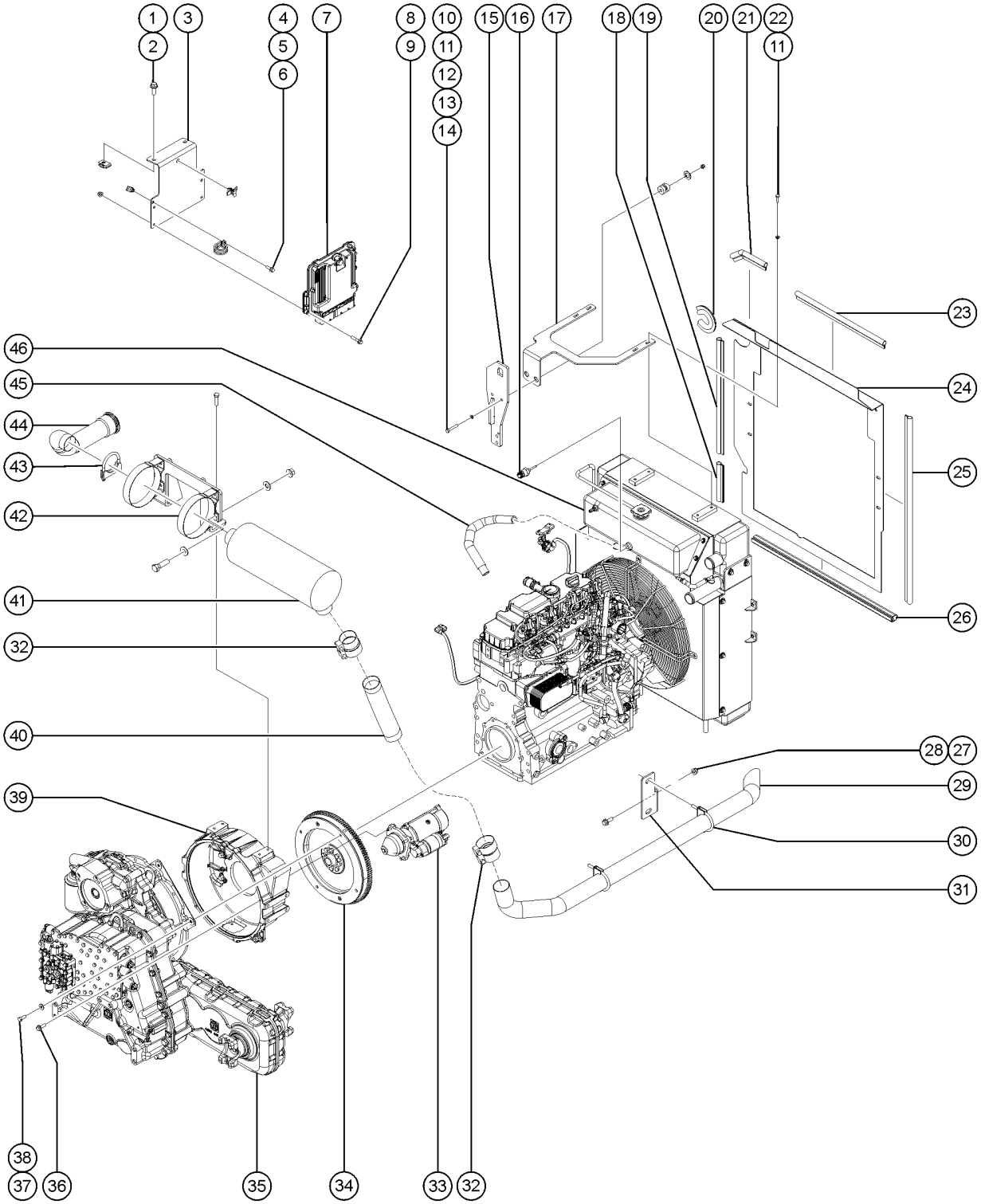

501.1 Deutz TCD3.6, T3 Engine, View 1

Item	Part No.	Description	Qty.
1	824090GT	SCREW,HHF,3/8-16X1,8,ZAG	2
2	29868GT	SPRING CLIP,3/8-16,.05-.20X.73,ZAG	2
3	1296651GT	FORMING, DEUTZ ECU, GTH1056	1
4	824078GT	SCREW,HHF,1/4-20X.75,8,ZAG	2
5	33784GT	CLAMP,1.31,#21 X 1/4,RUB CUSH	2
6	56912GT	SPRING CLIP,1/4-20,.025-.15X.54,ZAG	2
7	214795GT	ECM, DEUTZ	1
8	824080GT	SCREW, HHF, 1/4-20 X 1.25, 8, ZAG	4
9	1277924GT	NUT,NYLOCK FLG,1/4-20,F,ZAG	4
10	67349GT	SCREW,HHC,M8 X 50	2
11	824144GT	WASHER,FLAT,M8,DIN125,ZAB	6
12	236334GT	ISOLATOR,UP RADIATOR SUPPORT	2
13	823059GT	WASHER,SNUBBING,M8	2
14	25368GT	NUT,NYLOCK,M8X1.25	2
15	1279663GT	WELDMENT, ENGINE LIFT,TCD3.6	1
16	218715GT	COOLNT LEVL SENSR, DEUTZTCD3.6	1
17	1279662GT	WELDMENT,RAD MOUNT,TCD3.6	1
18	119219-675GT	TRIM,EDGE,1/8X3/4 END BULB	1
19	119219-2075GT	TRIM,EDGE,1/8X3/4 END BULB	1
20	119219-800GT	TRIM,EDGE,1/8X3/4 END BULB	1
21	119219-750GT	TRIM,EDGE,1/8X3/4 END BULB	1
22	824136GT	SCREW, HHC, M8-1.25 X 25, DIN933, 10.9, ZAB	4
23	119219-1863GT	TRIM,EDGE,1/8X3/4 END BULB	1
24	1296554GT	FORMING,BAFFLE,COOLER,GTH1056	1
25	119219-3400GT	TRIM,EDGE,1/8X3/4 END BULB	1
26	60875-2963GT	TRIM, RUBBER "D" SEAL, 3/16	1
27	1277924GT	NUT,NYLOCK FLG,1/4-20,F,ZAG	2
28	824078GT	SCREW,HHF,1/4-20X.75,8,ZAG	2

501.1 Deutz TCD3.6, T3 Engine, View 1

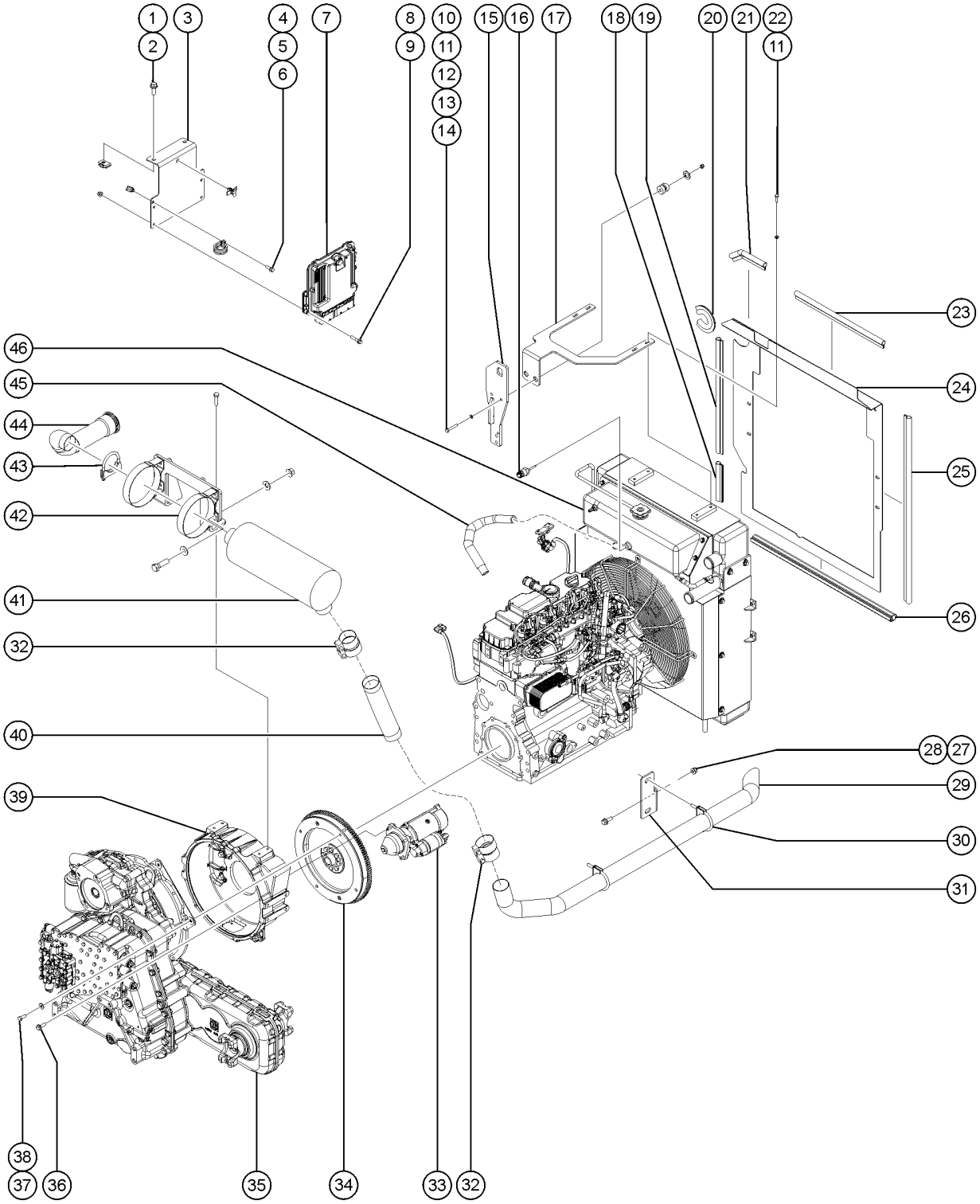

501.1 Deutz TCD3.6, T3 Engine, View 1

Item	Part No.	Description	Qty.
29	228578GT	TUBE, TAILPIPE, 2" PERKINS	1
30	71911GT	CLAMP,MUFFLER, 2.50 INCH	2
31	1290411GT	FORMING, TAILPIPE MOUNT	1
32	234962GT	CLAMP,EXHAUST,2.5"	2
33	1289747GT	STARTER, DEUTZ TCD 3.6,T4F,10K (no longer available)	1
33-	1313554GT	STARTER	1
33-	1313555GT	HEXAGON NUT	1
33-	1313556GT	HEXAGON BOLT	3
34	1298617GT	PLATE,FLYWHEEL,TCD 3.6,120 HP (no longer available)	1
34-	1313584GT	BEARING BUSH	1
34-	1313583GT	FLYWHEEL	1
34-	1313581GT	ADAPTER	1
34-	1313582GT	C.SUNK HEAD SCREW	8
35		Ref. TRANSMISSION,ZF,4WG98 TSC,4/3 SPD Refer to 206.1	1
36	232874GT	SCREW,HHF,M10-1.5X30,DIN6921,10.9,ZAB	12
37	1257421GT	SCREW,HHC,M10-1.5X16,DIN933,10	4
38	824145GT	WASHER, FLAT, DIN125, M10, ZAB	4
39	1289744GT	FLYWHEEL HOUSING, DEUTZ TCD 3.6 (no longer available)	1
39-	1313549GT	HEXAGON BOLT	6
39-	1313550GT	CLAMPING BUSH	2
39-	1313551GT	CONNECTION HOUSING	1
39-	1313552GT	HEXAGON BOLT	4
39-	1313553GT	COVER PLATE	1
40	234961GT	TUBE,EXHAUST,FLEX-PIPE,2.5"ID X 12"L	1
41	237162GT	MUFFLER,DEUTZ TCD3.6 T3	1
42	237163GT	MOUNT,MUFFLER,DEUTZ TCD3.6 T3	1
43	824778GT	CLAMP,EXHAUST,2-1/2,DEUTZ TCD3	1
44	237161GT	PIPE,TURBO TO MUFFLER,TCD3.6 T	1

501.1 Deutz TCD3.6, T3 Engine, View 1

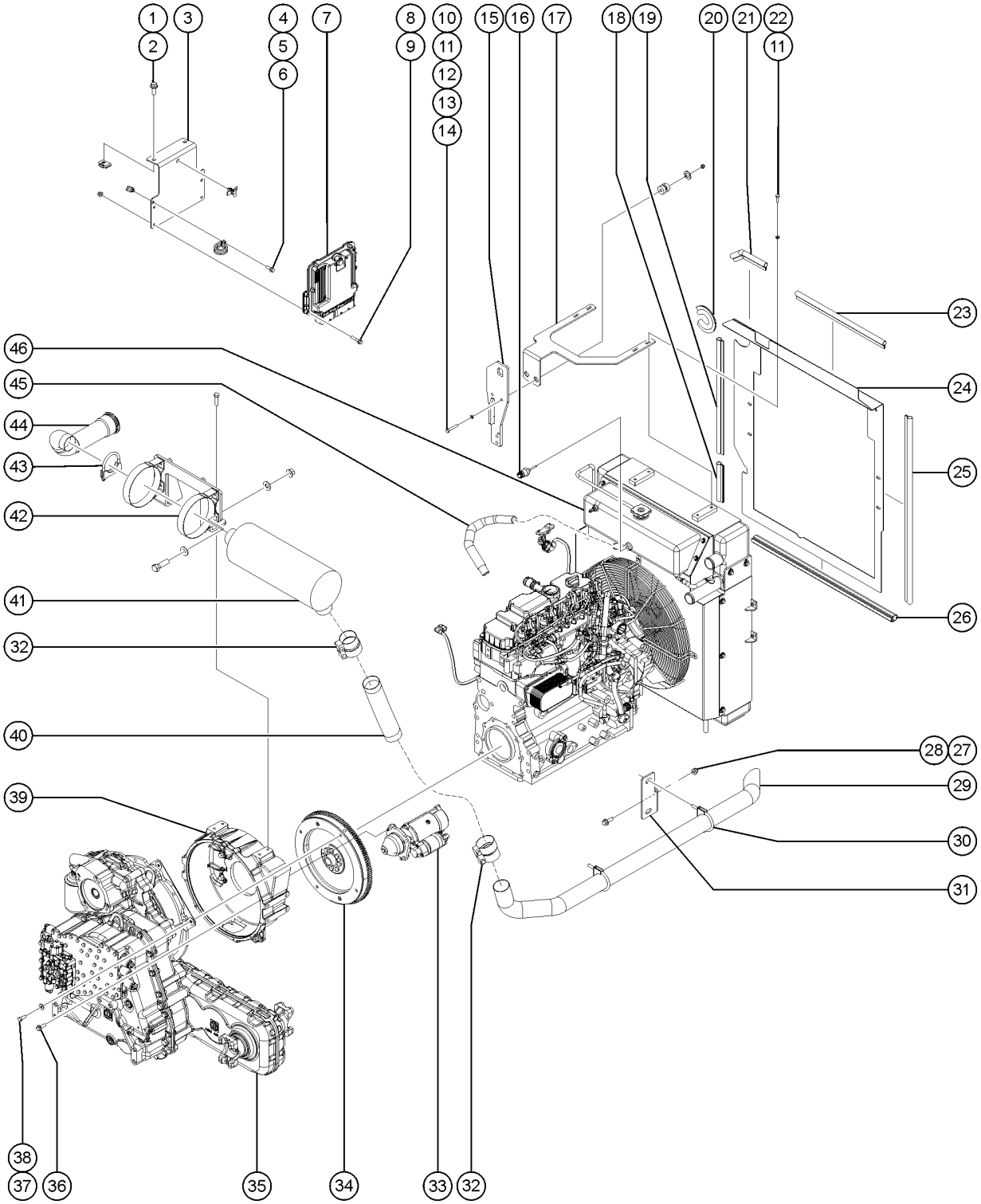

501.1 Deutz TCD3.6, T3 Engine, View 1

Item	Part No.	Description	Qty.
45	1257363GT	HOSE,COMP,TCD3.6,T4F	1
45-	1266688GT	SLEEVE,COMP HOSE,TCD3.6,T4F	
46	1257361GT	RADIATOR,TCD3.6 T4F	1

502.1 Deutz TCD3.6, T3 Engine, View 2

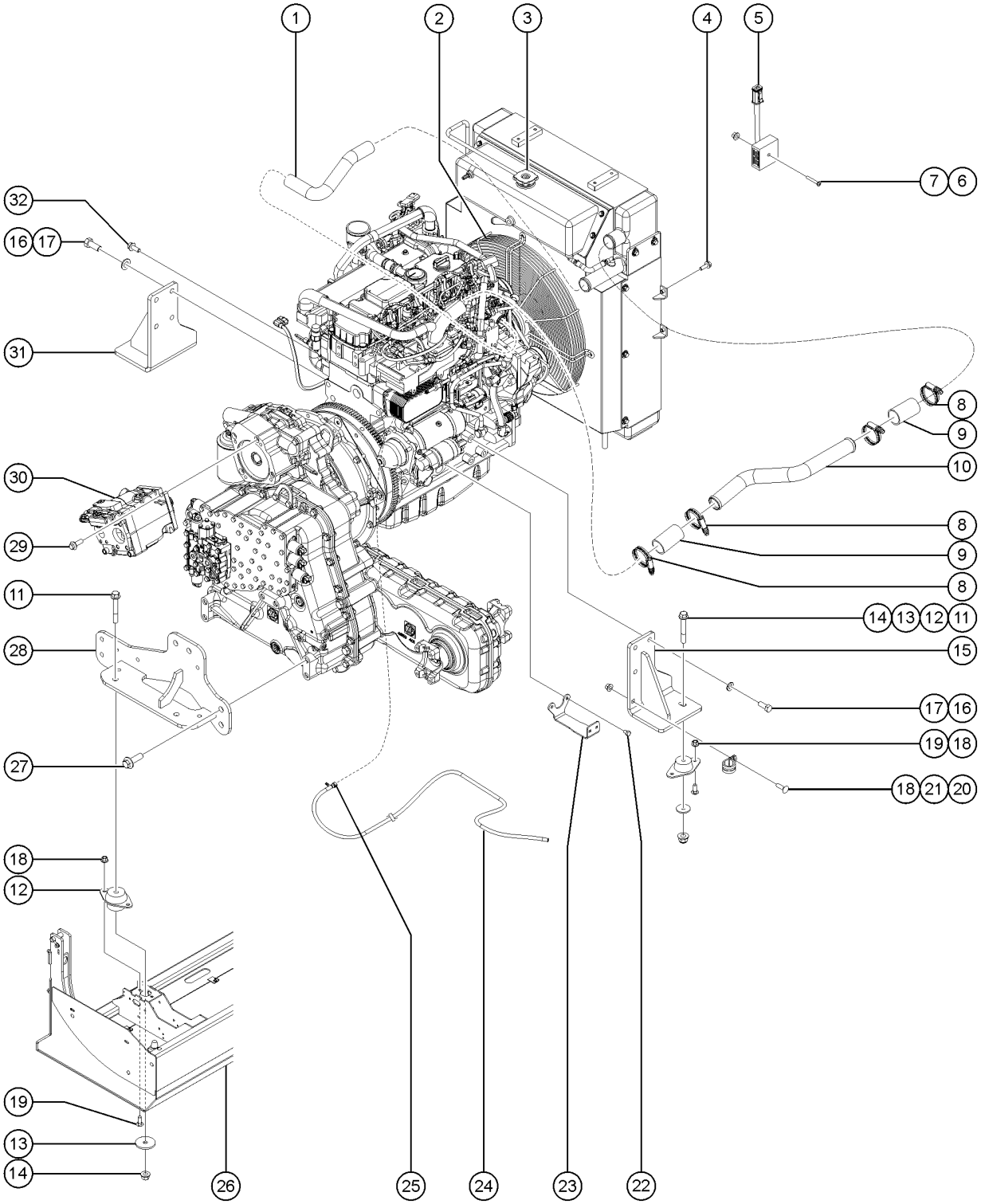

502.1 Deutz TCD3.6, T3 Engine, View 2

Item	Part No.	Description	Qty.
1	1264768GT	HOSE,RAD. OULET,TCD3.6,T4F	1
2	1257362GT	FAN GUARD,TCD3.6 T4F	1
3	1279661GT	CAP,RADIATOR,TCD3.6	1
4	824133GT	SCREW,HHF,M8-1.25X25,DIN6921,10.9,ZAB	4
5	1291562GT	RELAY,TIME DELAY,1 SEC,10A	1
6	825352GT	SCREW,PHPM,10-32X1.25,ZAG	1
7	1283005GT	NUT,NYLOCK FLG,10-32,A,ZAG	1
8	215216GT	CLAMP,HOSE,CT,SAE 262,1-3/4" TO 2-5/8"	4
9	215217GT	COUPLING,CAC,1.75X3.5 LONG	2
10	236274GT	PIPE,CAC OUTLET,DEUTZ TCD3.6	1
11	1256851GT	SCREW,HHF,1/2-13X3.5,8,ZAG	4
12	822621GT	ISOLATOR,ENGINE,570LB MAX	4
13	1256283GT	WASHER,FLAT,.5X2.25X.188,ZAG	4
14	1274172GT	NUT,NYLOCK FLG,1/2-13,G,ZAG	4
15	1290278GT	WELDMENT, MOTOR MOUNT, INBOARD	1
16	49381GT	SCREW,HHC,M12 X 30	8
17	49410GT	WASHER, FLAT, M12	8
18	1274322GT	NUT,NYLOCK FLG,3/8-16,F,ZAG	9
19	824125GT	BOLT, CARRIAGE, 3/8-16 X 1, 5, ZAG	8
20	1255757GT	BOLT,CARRIAGE,3/8-16X1.25,5,ZAG	6
21	1269035GT	CLAMP,1.13,#18 X 1/2,RUB CUSH	1
22	1257704GT	SCREW,HHC,M8-1.25X12,DIN933,10.9,ZAB	2
23	1291436GT	FORMING,BAT CABLE MNT,10K DTZ	1
24	1293925GT	HOSE,FUEL,RETURN,TCD3.6,T4F,10K	1
25	1280083GT	QUICK CONNECT,FUEL,90 DEG,10MM	1
26		Ref. ASSEMBLY,ENGINE TRAY,10K Refer to 203.1	1
27	1268716GT	SCREW,HHF,M16-2.0X50,DIN6921,10.9,ZAB	6
28	1289914GT	WELDMENT, ZF TRANSMISSION MOUNT	1

502.1 Deutz TCD3.6, T3 Engine, View 2

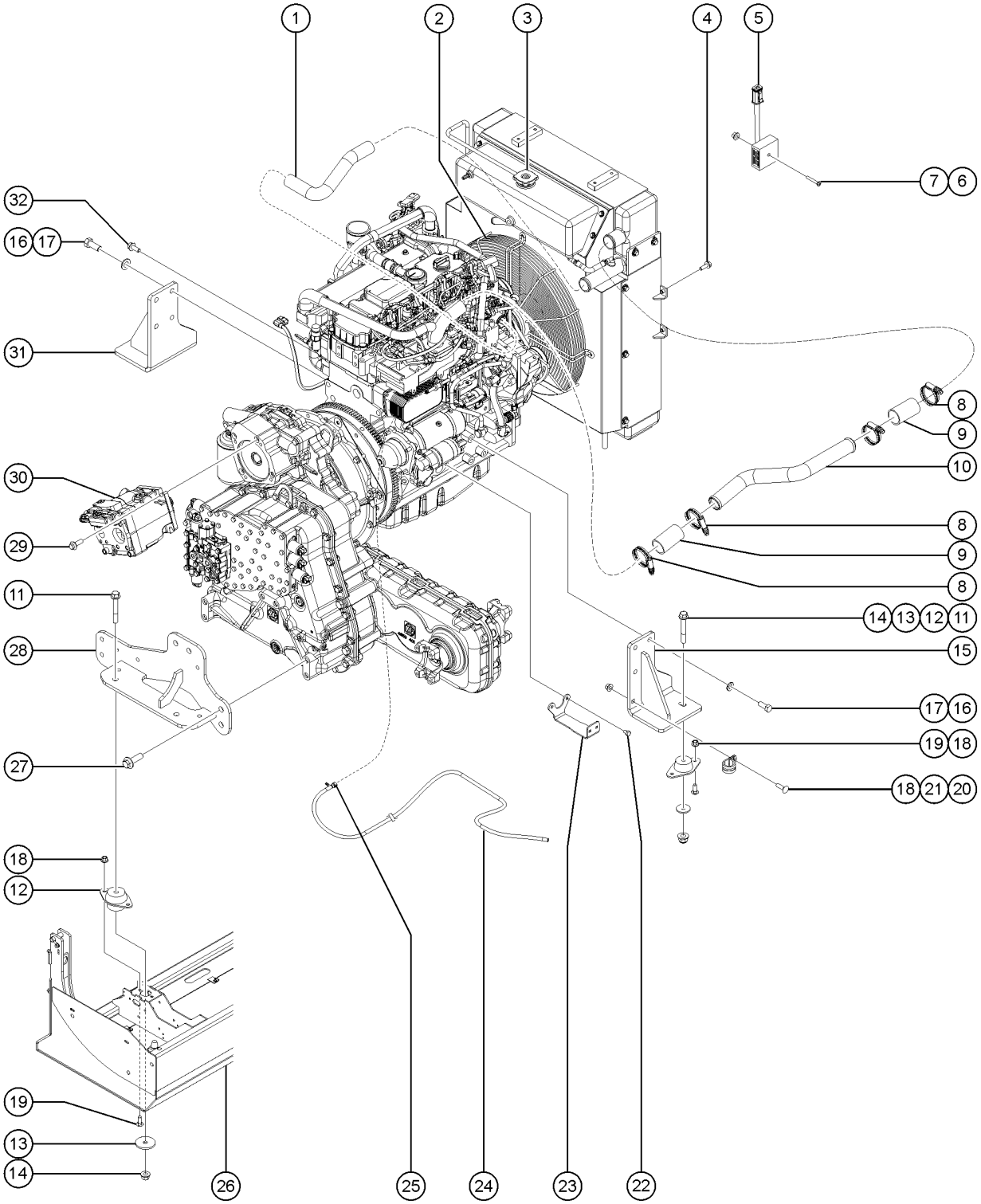

502.1 Deutz TCD3.6, T3 Engine, View 2

Item	Part No.	Description	Qty.
29	231511GT	SCREW,HHF,M12-1.75X35,DIN6921,10.9,ZAB	4
30	1292742GT	PUMP,DANFOSS,65CC	1
31	1290277GT	WELDMENT, MOTOR MOUNT,OUTBOARD	1
32	1255806GT	SCREW,HHF,M12-1.75X20,DIN6921,10.9,ZAB	1

503.1 Deutz TCD3.6, T3 Engine, View 3

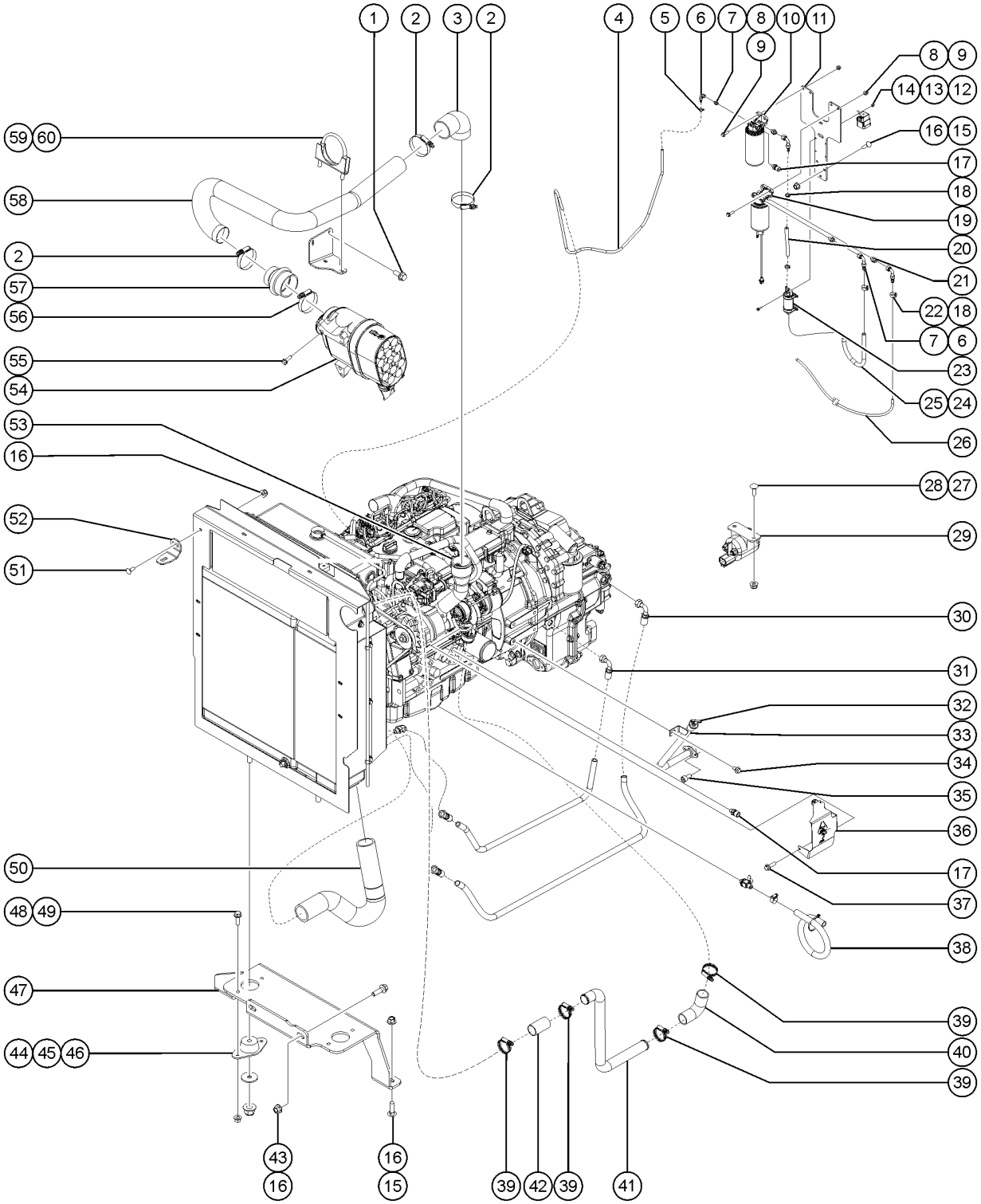

503.1 Deutz TCD3.6, T3 Engine, View 3

Item	Part No.	Description	Qty.
1	824132GT	SCREW,HHF,M8-1.25X20,DIN6921,10.9,ZAB	2
2	1261460GT	CLAMP,HOSE,CT,SAE 48,2-9/16"	3
3	1257434GT	HOSE,ELBOW,RBR,2.75IS,3.13OD	1
4	48773-9600GT	SLEEVE,NYLON,.86 ID	1
4-	823421GT	HOSE,FUEL,1/2,GATES RLA	96 inches
5	28443GT	CABLE TIE, 11.5" BLACK	2
6	1253641GT	ELBOW,90DEG,1/2" HOSE BARB	2
7	162209GT	FITTING,CONN,16MM-8MJ	2
8	231533GT	SCREW,HHF,M10-1.5X35,DIN6921,10.9,ZAB	4
9	1283015GT	NUT,NYLOCK FLG,M10-1.5,DIN6926,10,ZAB	4
10	236266GT	FILTER,FUEL,DEUTZ TCD3.6	1
11	1295726GT	PLATE,FUEL FILTER BRACKET,3.6L	1
12	1283020GT	NUT,NYLOCK,M5-0.8,DIN985,10,ZAB	4
13	60521GT	RELAY,SEALED 30/40 AMP	1
14	218458GT	SCREW,HHF,M5-0.8X20,DIN6921,10.9,ZAB	4
15	1255757GT	BOLT,CARRIAGE,3/8-16X1.25,5,ZAG	5
16	1274322GT	NUT,NYLOCK FLG,3/8-16,F,ZAG	8
17	824673GT	SENSOR,LOW PRESSURE,DEUTZ 2.9L	2
18	44909GT	CLAMP,HOSE,.25	3
19	236260GT	PRE-FILTER,FUEL,DEUTZ TCD3.6	1
20	823420-690GT	HOSE,FUEL,3/8,GATES RLA	1
21	162208GT	FITTING,CONN,16MM-6MJ	2
22	1253642GT	ELBOW,90DEG,3/8" HOSE BARB	2
23	236259GT	LIFT PUMP,FUEL,DEUTZ TCD3.6	1
24	823421-1750GT	HOSE,FUEL, 1/2, GATES RLA	1
25	46131GT	CLAMP,HOSE,.63" - 1.0" X .5"	1
26	1293924GT	HOSE,FUEL,SUPPLY,TCD3.6,T4F,10K	1

503.1 Deutz TCD3.6, T3 Engine, View 3

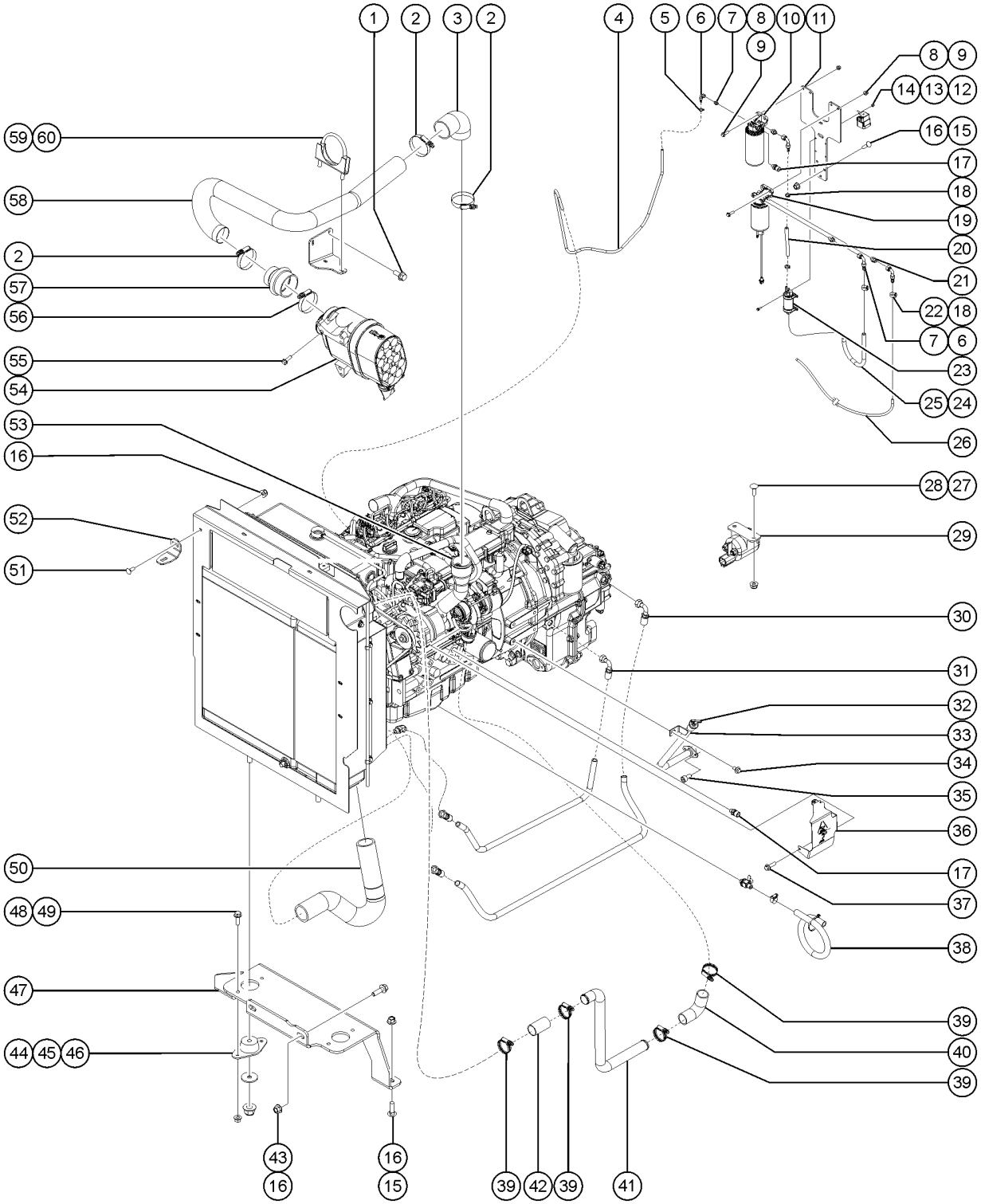

503.1 Deutz TCD3.6, T3 Engine, View 3

Item	Part No.	Description	Qty.
27	824124GT	BOLT, CARRIAGE, 1/4-20 X .75, 5, ZAG	2
28	1277924GT	NUT,NYLOCK FLG,1/4-20,F,ZAG	2
29	1254352GT	RELAY, SPST, 12V, 100A, SEALED	1
30	61073-6500GT	ASSY, HOSE, HYD, -12, 3000, STR, 90	1
30-	48841GT	HOSE END,FEM SW,ORFS,-12-12	
30-	48846GT	HOSE END,FEMSW,90D,ORFS,-12-12	
31	61073-5500GT	ASSY, HOSE, HYD, -12, 3000, STR, 90	1
31-	48846GT	HOSE END,FEMSW,90D,ORFS,-12-12	
31-	48841GT	HOSE END,FEM SW,ORFS,-12-12	
32	1291298GT	DIPSTICK,ZF TRANSMISSION,4/3SPD	1
33	1289690GT	WELDMENT, DIPSTICK TUBE, ZF TRANSMISSION, 4/3SPD	1
33-	1293817GT	O-RING 29.4 x 3.1 NBR	
34	1255806GT	SCREW,HHF,M12-1.75X20,DIN6921,10.9,ZAB	1
35	1260002GT	SCREW,SHC,M8-1.25X16,DIN912, 1	2
36	1261344GT	FORMING,HEAT SHLD,TURBO,TCD3.6	1
37	1251983GT	SCREW,HHF,M8-1.25X16,DIN6921,10.9,ZAB	
38	826377GT	ASSEMBLY,OIL DRAIN VALVE KIT	1
38-	826378GT	VALVE,OIL DRAIN,DEUTZ	
38-	19273GT	CLAMP,HOSE,.75 **	
38-	1702-2400GT	HOSE-HEATER,5/8 ID-BLACK	
39	215216GT	CLAMP,HOSE,CT,SAE 262,1-3/4" TO 2-5/8"	4
40	215219GT	SLEEVE,TUBE,CAC TURBO,TCD3.6	1
41	1264765GT	PIPE,CAC INLET,TCD3.6,T4F	1
42	215217GT	COUPLING,CAC,1.75X3.5 LONG	1
43	824091GT	SCREW, HHF, 3/8-16 X 1.25, 8, ZAG	2
44	T114350GT	ISOLATOR,RADIATOR,PERKINS	2
45	824120GT	WASHER,FLAT,.375X1.50X.125,ZAG	
46	1283017GT	NUT,NYLOCK,FLG,M14-2.0,DIN6926,10,ZAB	

503.1 Deutz TCD3.6, T3 Engine, View 3

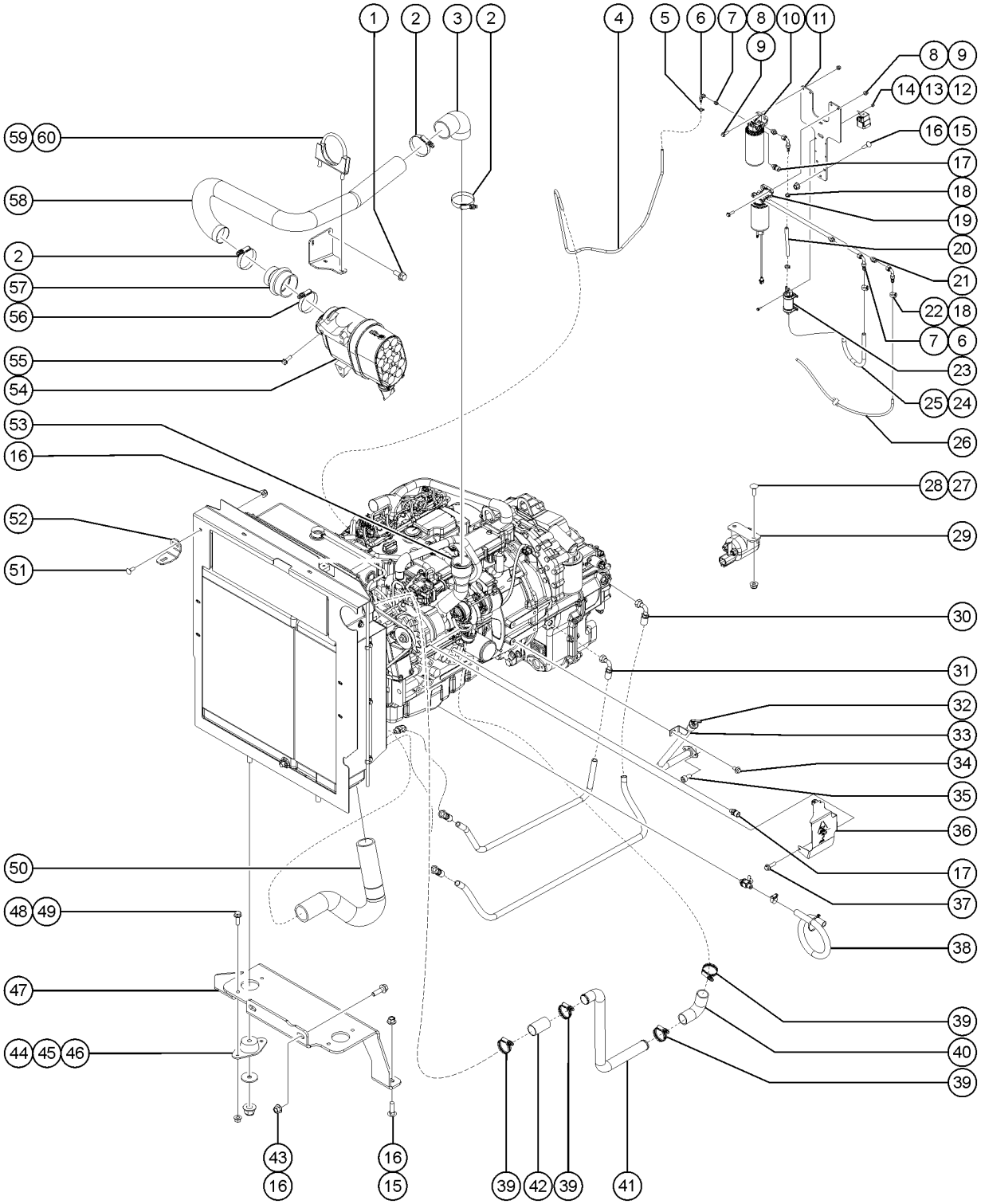

503.1 Deutz TCD3.6, T3 Engine, View 3

Item	Part No.	Description	Qty.
47	1290244GT	FORMING, RADIATOR MOUNT	1
48	824086GT	SCREW,HHF,5/16-18X1,8,ZAG	4
49	1274167GT	NUT,NYLOCK FLG,5/16-18,F,ZAG	4
50	1264767GT	HOSE,RAD. INLET,TCD3.6,T4F	1
51	824125GT	BOLT, CARRIAGE, 3/8-16 X 1, 5, ZAG	1
52	1279230GT	FORMING, SUPPORT, BRACKET, SLOTTED,GTH844D	1
53	1257339GT	INLET,TURBO,TCD 3.6,T4	1
54	824991GT	ASSY, AIR FILTER, COMPLETE M+H IQORON V7	1
54-	1256219GT	FILTER,MAIN,M+H IQORON V7	
54-	1256220GT	FILTER,SECONDARY,M+H IQORON V7	
55	824133GT	SCREW,HHF,M8-1.25X25,DIN6921,10.9,ZAB	3
56	1261461GT	CLAMP,HOSE,CT,SAE 412,3-1/4" TO 4-1/8"	1
57	825560GT	REDUCER,HUMP HOSE,3.5"-2.75"	1
58	1264664GT	PIPE,INLET,TCD3.6,T4F,74HP 8K	1
59	1264286GT	CLAMP,MUFFLER,2.75 I.D.,FLAT	1
60	1258436GT	FORMING,PIPE,INLET,TCD3.6,T4F	1

504.1 Deutz TCD3.6, T3 Engine, View 4

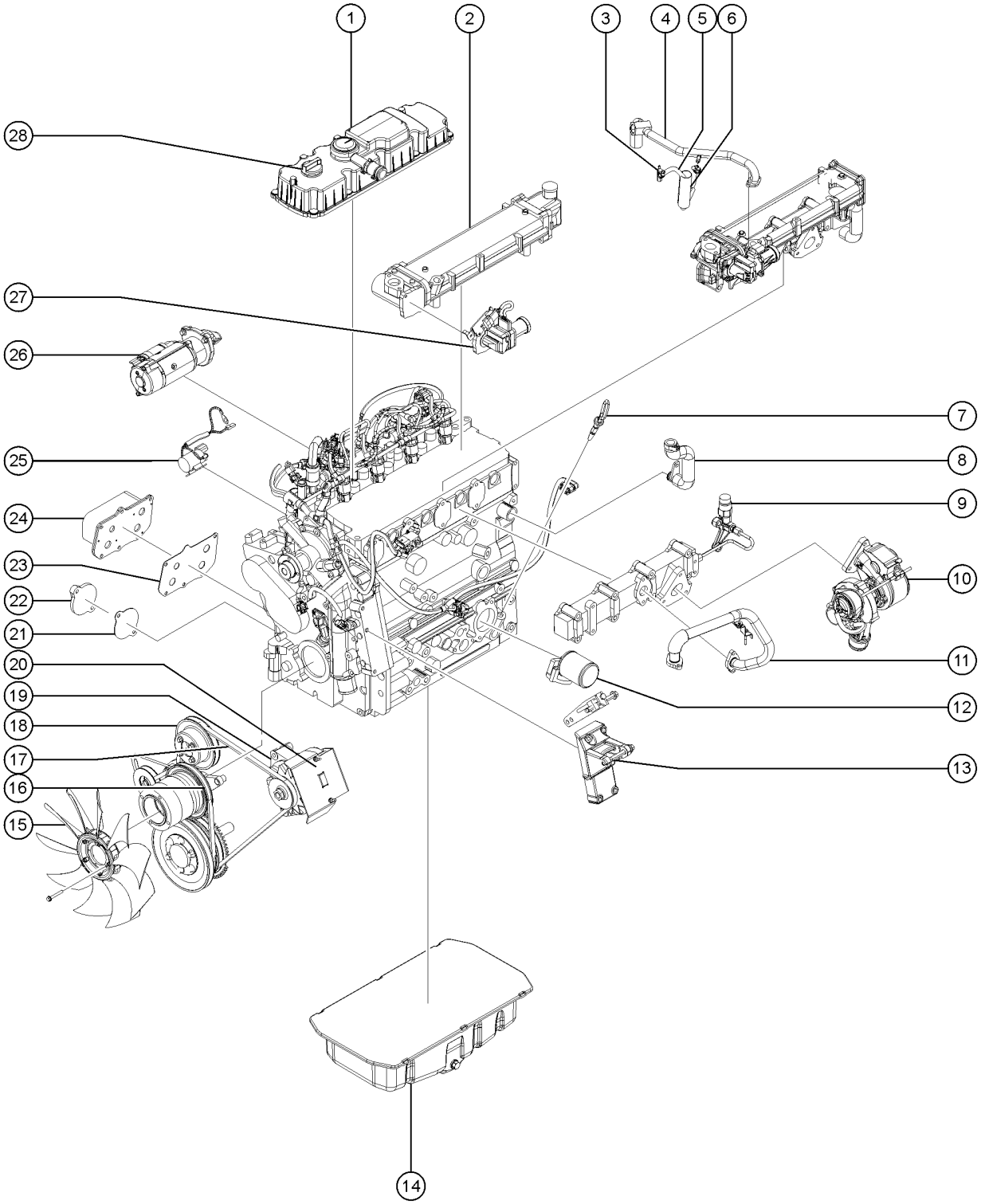

504.1 Deutz TCD3.6, T3 Engine, View 4

Item	Part No.	Description	Qty.
-	1286036GT	SWITCH,TEMP,120C,3/4-16	
-	1278206GT	SENSOR,FUEL,HIGH PRESSURE,DEUTZ TD 2.9-3.6	
-	1280082GT	QUICK CONNECT,FUEL,STRT,12MM	
1	236246GT	VALVE COVER,DEUTZ TCD3.6	1
2	1257329GT	MODULE,EGR,TCD3.6 T4F	1
3	21465GT	CLAMP,HOSE,.25" - .63" X .3125	2
4	1257635GT	HOSE,COOLANT,EGR,TCD3.6 T4F	1
5	1279744GT	HOSE,COOLANT,5/16" DIA,12"	1
6	1283445GT	WRAP,FIBERGLASS,HEAT RESISTANT,4"	1
7	1257386GT	DIPSTICK,TCD3.6 T4F	1
8	1257328GT	DIPSTICK,TCD3.6 T4F	
9	1257327GT	PIPE,MAN,EXHAUST,TCD3.6 T4F	1
10	236258GT	TURBOCHARGER,DEUTZ TCD3.6	1
11	1257637GT	INLET,TURBO,TCD 3.6,T4	1
12	49924GT	FILTER,OIL,DEUTZ F4L1011F	1
13	236256GT	FILTER,OIL,DEUTZ F4L1011F	1
14	236243GT	OIL PAN, DEUTZ TCD3.6	1
15	219329GT	FAN,RADIATOR,DEUTZ TCD3.6, 10K	1
16	1257318GT	BELT,DRIVE,TCD 3.6,T4F	1
16-	824763GT	PULLEY,FAN SUPPORT,DEUTZ TCD3.6,T3	
17	1279425GT	V-BELT,ALTERNATOR,DEUTZ,10K,T3	1
18	236248GT	PULLEY ASSEMBLY,ALTERNATOR,TCD	1
19	236251GT	ALTERNATOR,95 AMP,DEUTZ TCD3.6	1
20	1263497GT	FORMING.GUARD,ALT,TCD3.6	1
20-	1263973GT	FORMING.GUARD,ALT,TCD3.6	
20-	1253185GT	WASHER,FLAT,#10,USS,ZAG	
20-	1264484GT	WASHER,FLAT,#10,USS,ZAG	
20-	1263498GT	CAP, THREAD, 10-32	

504.1 Deutz TCD3.6, T3 Engine, View 4

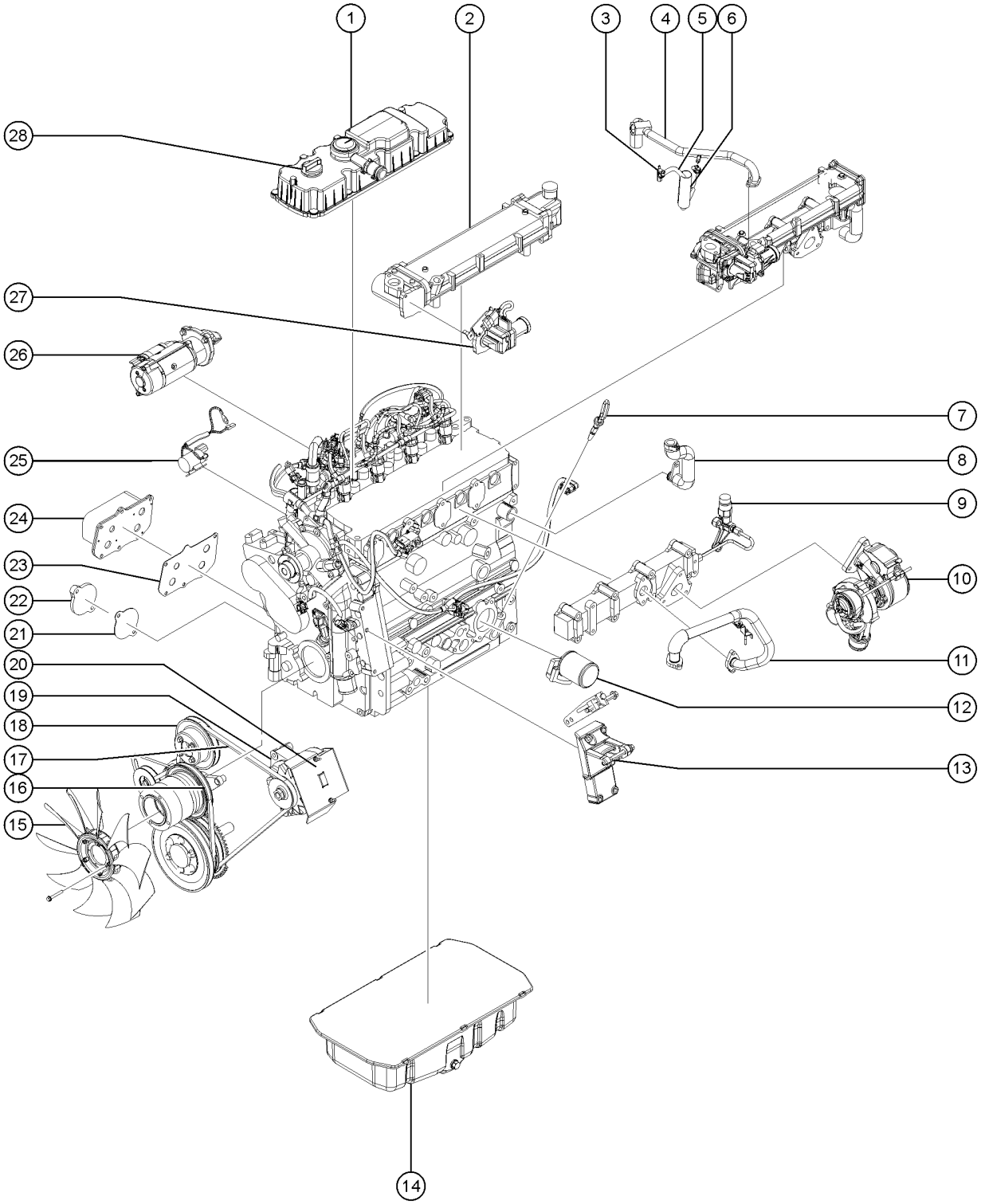

504.1 Deutz TCD3.6, T3 Engine, View 4

Item	*Part No.*	*Description*	*Qty.*
21	1278738GT	O-RING,OIL FILL COVER,TCD 3.6	1
22	29557GT	CAP,OIL FILLER,DEUTZ,DIESEL***	1
23	1257358GT	GASKET,COOLER,OIL,TCD 3.6,T4F	1
24	1260357GT	OIL COOLER,TD2.9	1
25	1257343GT	RELAY,STARTER,TCD 3.6,T4F	1
26	1289747GT	STARTER, DEUTZ TCD 3.6,T4F,10K (no longer available)	1
26-	1313554GT	STARTER	1
26-	1313555GT	HEXAGON NUT	1
26-	1313556GT	HEXAGON BOLT	3
27	1257334GT	STARTER,TCD 3.6,T4F	1
28	1257352GT	CAP,OIL FILLER,TCD 3.6,T4F	1

505.1 Deutz TCD3.6, T4F Engine, View 1

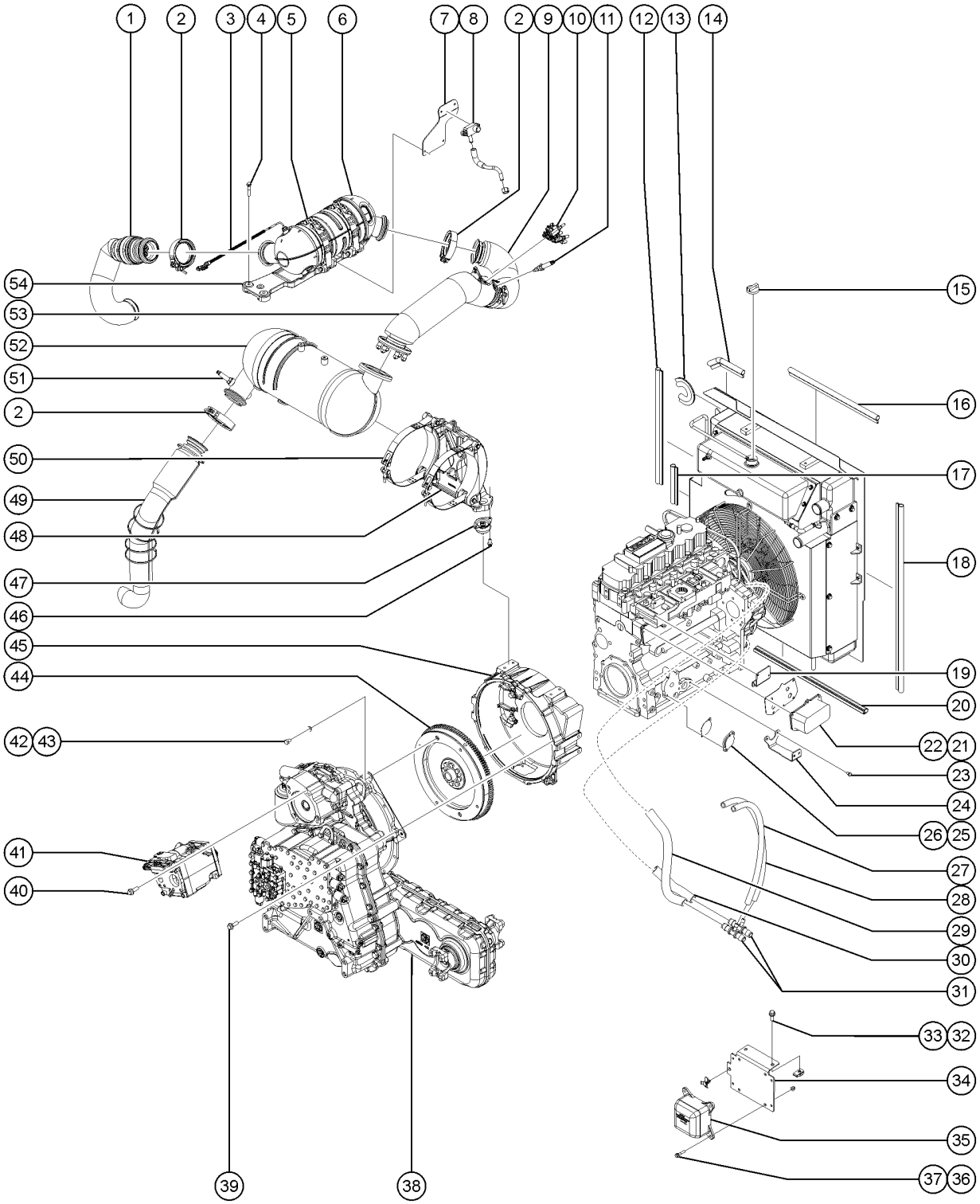

505.1 Deutz TCD3.6, T4F Engine, View 1

Item	Part No.	Description	Qty.
1	1257374GT	PIPE,TURBO TO DOC,TCD3.6 T4F	1
2	824776GT	CLAMP,TURBO PIPE-DOC,DEUTZ TCD	4
3	1257779GT	SENSOR,EXH,TEMP,TCD3.6 T4F	1
4	1257231GT	SCREW,HHF,M8-1.25X50,DIN6921,10.9,ZAB	3
5	1257697GT	BAND,MTG,DOC,TCD3.6,4F	2
6	1257375GT	DOC,DEUTZ,TCD3.6 T4F	1
7	1264817GT	PLATE,PRESS. SENSOR,TCD3.6,T4F	1
8	1257778GT	SENSOR,EXH,PRESS,TCD3.6 T4F	1
9	1257376GT	PIPE,DOC TO MIXING,TCD3.6 T4F	1
10	1257698GT	DOSING UNIT,TCD3.6 T4F	1
11	1259049GT	SENSOR,EXH,NOX,TCD3.6 T4F	1
12	119219-2075GT	TRIM,EDGE,1/8X3/4 END BULB	1
13	119219-800GT	TRIM,EDGE,1/8X3/4 END BULB	1
14	119219-750GT	TRIM,EDGE,1/8X3/4 END BULB	1
15	1279661GT	CAP,RADIATOR,TCD3.6	1
16	119219-1863GT	TRIM,EDGE,1/8X3/4 END BULB	1
17	119219-675GT	TRIM,EDGE,1/8X3/4 END BULB	1
18	119219-3400GT	TRIM,EDGE,1/8X3/4 END BULB	1
19	1264816GT	PLATE,NOX SENSOR,MP,TCD3.6,T4F	1
20	60875-2963GT	TRIM, RUBBER "D" SEAL, 3/16	1
21	1260357GT	OIL COOLER,TD2.9	1
22	1257358GT	GASKET,COOLER,OIL,TCD 3.6,T4F	1
23	1257704GT	SCREW,HHC,M8-1.25X12,DIN933,10.9,ZAB	2
24	1291436GT	FORMING,BAT CABLE MNT,10K DTZ	1
25	29557GT	CAP,OIL FILLER,DEUTZ,DIESEL***	1
26	1278738GT	O-RING,OIL FILL COVER,TCD 3.6	1
27	1294863-1850GT	HOSE,COOLANT,3/8",GR	1
28	1264646GT	HOSE,COOLANT,RTN,DEF,INJECT	1

505.1 Deutz TCD3.6, T4F Engine, View 1

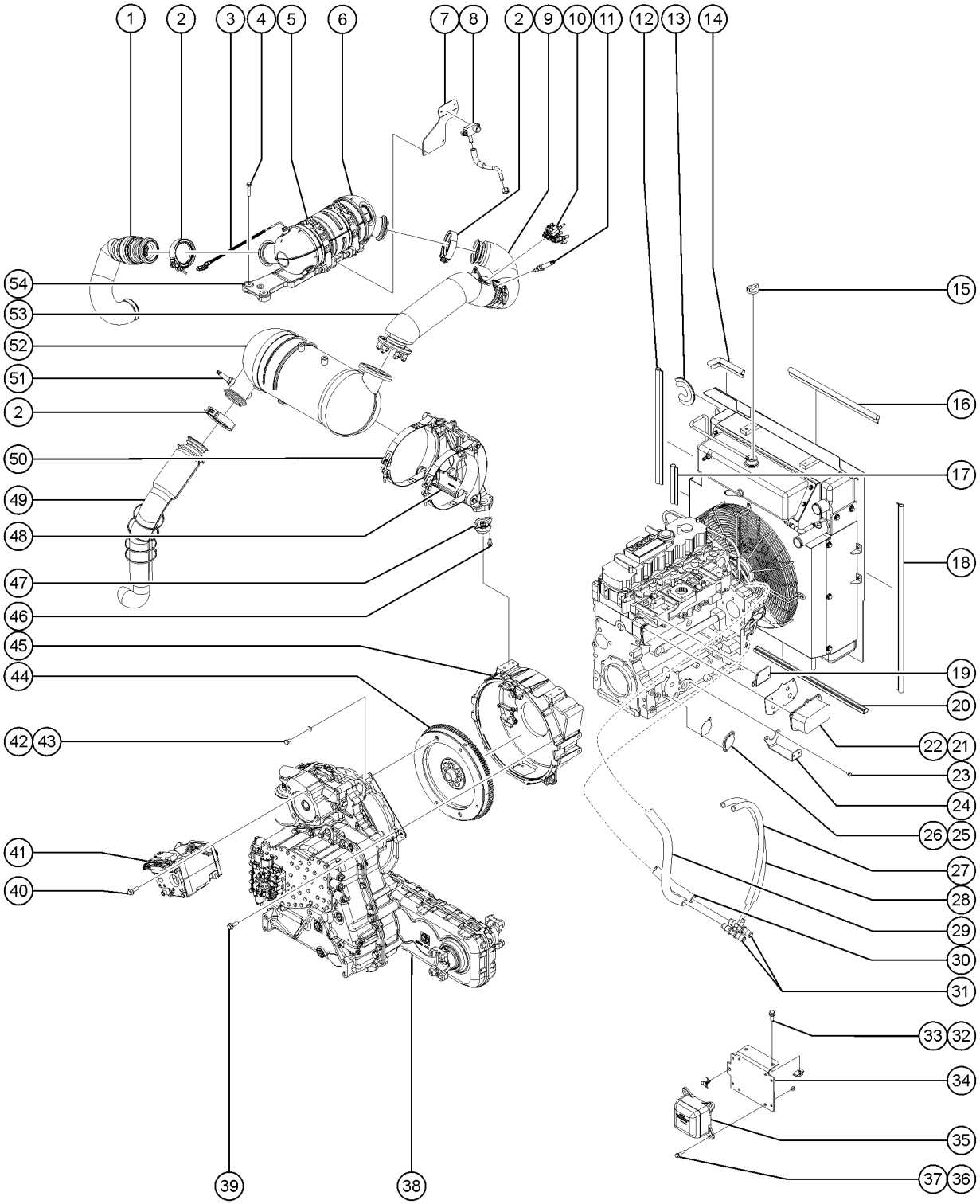

505.1 Deutz TCD3.6, T4F Engine, View 1

Item	Part No.	Description	Qty.
29	1294864-1525GT	HOSE,COOLANT,5/8",GR	1
29-	237957GT	CONN,M22X1.5X5/8MALE JIC,90DEG	
29-	237956GT	CONN,M22X1.5X5/8XMALE JIC	
30	1264644GT	HOSE,COOLANT,BLUE,DEF,ENG,5/8"	1
30-	237958GT	CONN,5/8FEM JIC SWIV5/8 HOSBRB	
30-	237956GT	CONN,M22X1.5X5/8XMALE JIC	
31	1264529GT	TEE,5/8 X 5/8 X 3/8,BARB,NYLON	2
32	824090GT	SCREW,HHF,3/8-16X1,8,ZAG	4
33	29868GT	SPRING CLIP,3/8-16,.05-.20X.73,ZAG	4
34	1296650GT	FORMING, ECU AND FUSE BOX MOUNT, GTH1056	1
35	1261942GT	MODULE, FUSE & RELAY, DEUTZ	1
36	824080GT	SCREW, HHF, 1/4-20 X 1.25, 8, ZAG	4
37	1277924GT	NUT,NYLOCK FLG,1/4-20,F,ZAG	4
38		Ref. TRANSMISSION,ZF,4WG98 TSC,4/3 SPD Refer to 206.1	1
39	232874GT	SCREW,HHF,M10-1.5X30,DIN6921,10.9,ZAB	12
40	231511GT	SCREW,HHF,M12-1.75X35,DIN6921,10.9,ZAB	4
41	1292742GT	PUMP,DANFOSS,65CC	1
41-	1326315GT	O-RING, 4.75IDX4.94ODX.139DIA Replaces 825423GT	1
42	1257421GT	SCREW,HHC,M10-1.5X16,DIN933,10	4
43	824145GT	WASHER, FLAT, DIN125, M10, ZAB	4
44	1298617GT	PLATE,FLYWHEEL,TCD 3.6,120 HP (no longer available)	1
44-	1313581GT	ADAPTER	1
44-	1313582GT	C.SUNK HEAD SCREW	8
44-	1313583GT	FLYWHEEL	1
44-	1313584GT	BEARING BUSH	1
45	1289744GT	FLYWHEEL HOUSING, DEUTZ TCD 3.6 (no longer available)	1
45-	1313550GT	CLAMPING BUSH	2
45-	1313553GT	COVER PLATE	1

505.1 Deutz TCD3.6, T4F Engine, View 1

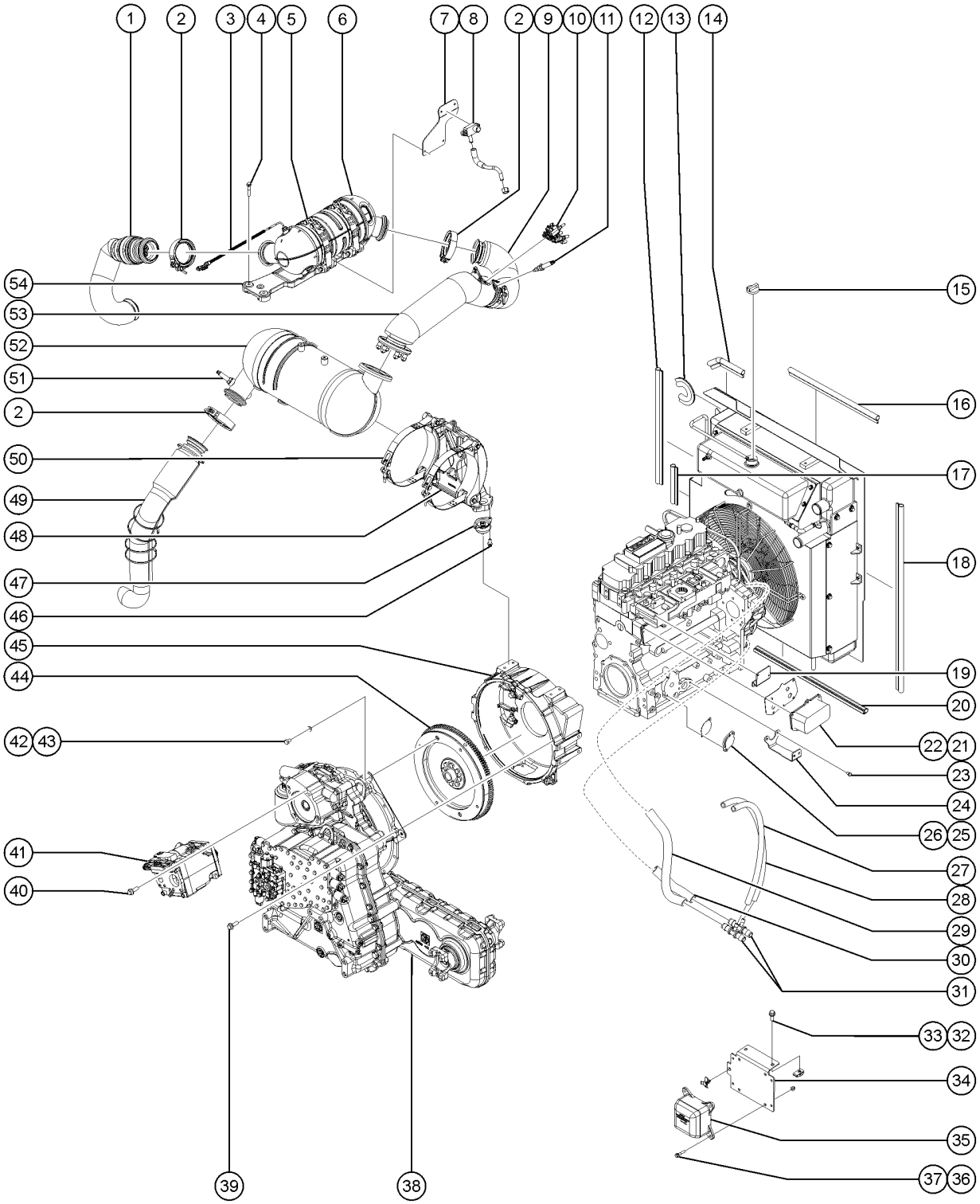

505.1 Deutz TCD3.6, T4F Engine, View 1

Item	Part No.	Description	Qty.
45-	1313551GT	CONNECTION HOUSING	1
45-	1313552GT	HEXAGON BOLT	4
45-	1313549GT	HEXAGON BOLT	6
46	824132GT	SCREW,HHF,M8-1.25X20,DIN6921,10.9,ZAB	4
47	1257372GT	ISOLATOR,DOC MTG,REAR,TCD3.6 replaced by 1257371GT	2
47B	1257371GT	ISOLATOR,DOC MT,FR,TCD3.6	2
48	1257370GT	CASTING,DOC MTG,R,TCD3.6 T4F	1
49	1292056GT	TAILPIPE,FLEX,TCD3.6,T4F,10K	1
49-	1292060GT	WRAP,HEAT SHIELD,13"X29",10K	1
49-	1257664GT	THERMAL TIE,3/16x20"L	
50	1257367GT	BAND,MTG,SCR,TCD3.6,T4F	2
51	1258711GT	SENSOR,EXH,NOX,TCD3.6 T4F	1
52	1292115GT	SCR,DEUTZ,TCD 3.6,T4F,10K	1
53	1257378GT	PIPE,MIXING,TCD3.6 T4F	1
54	1257369GT	CASTING,DOC MTG,MID,TCD3.6,10K	1

506.1 Deutz TCD3.6, T4F Engine, View 2

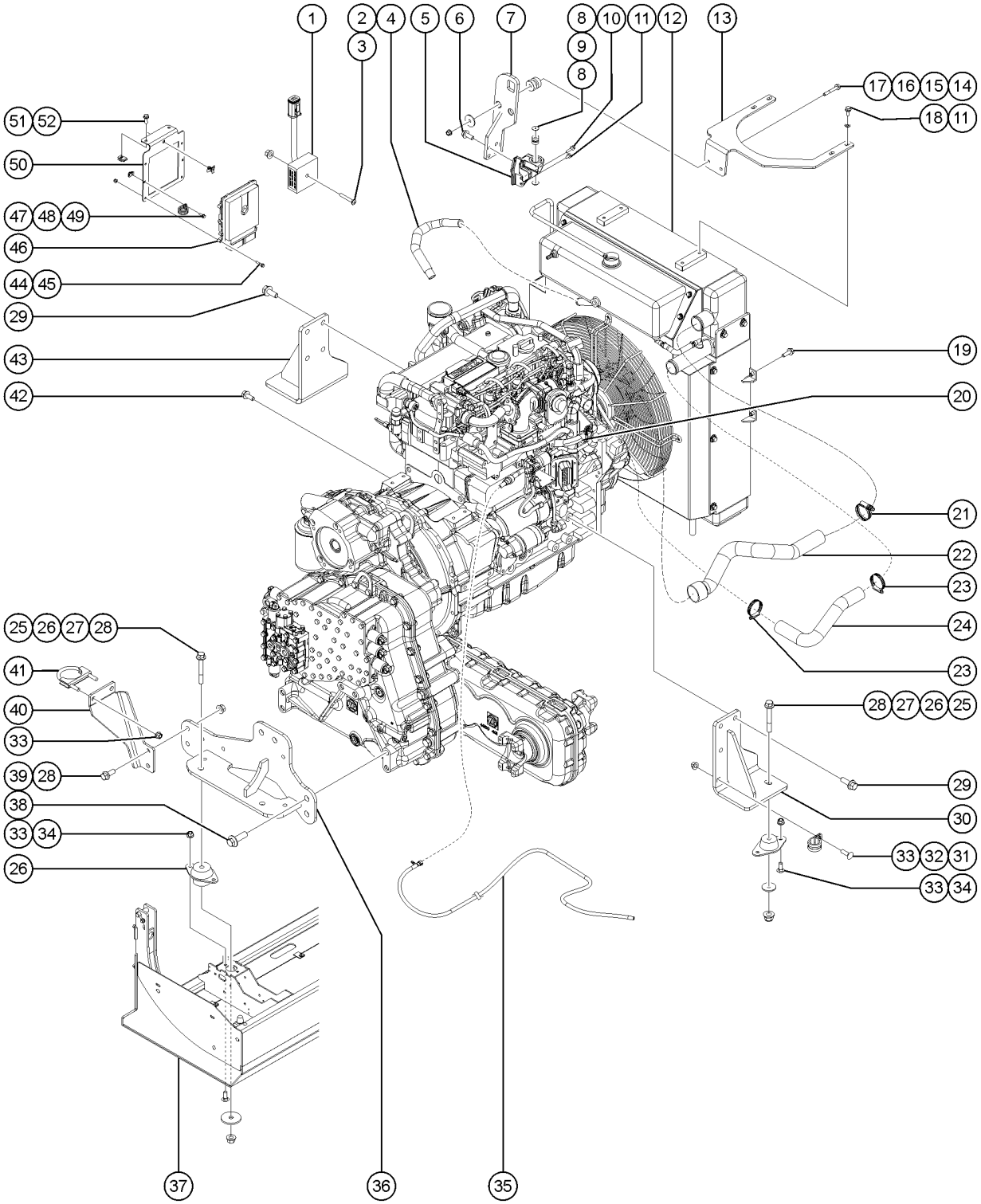

506.1 Deutz TCD3.6, T4F Engine, View 2

Item	Part No.	Description	Qty.
1	1291562GT	RELAY,TIME DELAY,1 SEC,10A	1
2	825352GT	SCREW,PHPM,10-32X1.25,ZAG	1
3	1283005GT	NUT,NYLOCK FLG,10-32,A,ZAG	1
4	1257363GT	HOSE,COMP,TCD3.6,T4F	1
5	1283319GT	CASTING,DOC MTG,FR,TCD3.6,T4F	1
6	231530GT	SCREW,HHF,M10-1.5X25,DIN6921,0.9,ZAB	4
7	1283321GT	WELDMENT,ENGINE LIFT,TCD3.6,T4F	1
8	1257699GT	WASHER,DOC MTG,TCD 3.6 T4F	2
9	1257371GT	ISOLATOR,DOC MT,FR,TCD3.6	1
10	237820GT	SCREW,HHF,M8X40,DIN6921,8.8,YZ	1
11	824132GT	SCREW,HHF,M8-1.25X20,DIN6921,10.9,ZAB	5
12	1257361GT	RADIATOR,TCD3.6 T4F	1
13	1283320GT	FORMING,RADIATOR MOUNT,TCD3.6,T4F	1
14	1255801GT	SCREW,HHF,5/16-18X2.25,8,ZAG	2
15	236334GT	ISOLATOR,UP RADIATOR SUPPORT	2
16	824120GT	WASHER,FLAT,.375X1.50X.125,ZAG	2
17	1274167GT	NUT,NYLOCK FLG,5/16-18,F,ZAG	2
18	824144GT	WASHER,FLAT,M8,DIN125,ZAB	4
19	824133GT	SCREW,HHF,M8-1.25X25,DIN6921,10.9,ZAB	4
20	1257338GT	COOLANT HOSE,TSTAT,TCD3.6,T4F	1
21	215216GT	CLAMP,HOSE,CT,SAE 262,1-3/4" TO 2-5/8"	5
22	1264766GT	PIPE,CAC OUTLET,TCD3.6,T4F	1
23	1261395GT	CLAMP,HOSE,ADJ,2" HOSE,DEUTZ T	2
24	1264768GT	HOSE,RAD. OULET,TCD3.6,T4F	1
25	1256851GT	SCREW,HHF,1/2-13X3.5,8,ZAG	4
26	822621GT	ISOLATOR,ENGINE,570LB MAX	4
27	1256283GT	WASHER,FLAT,.5X2.25X.188,ZAG	4
28	1274172GT	NUT,NYLOCK FLG,1/2-13,G,ZAG	6

506.1 Deutz TCD3.6, T4F Engine, View 2

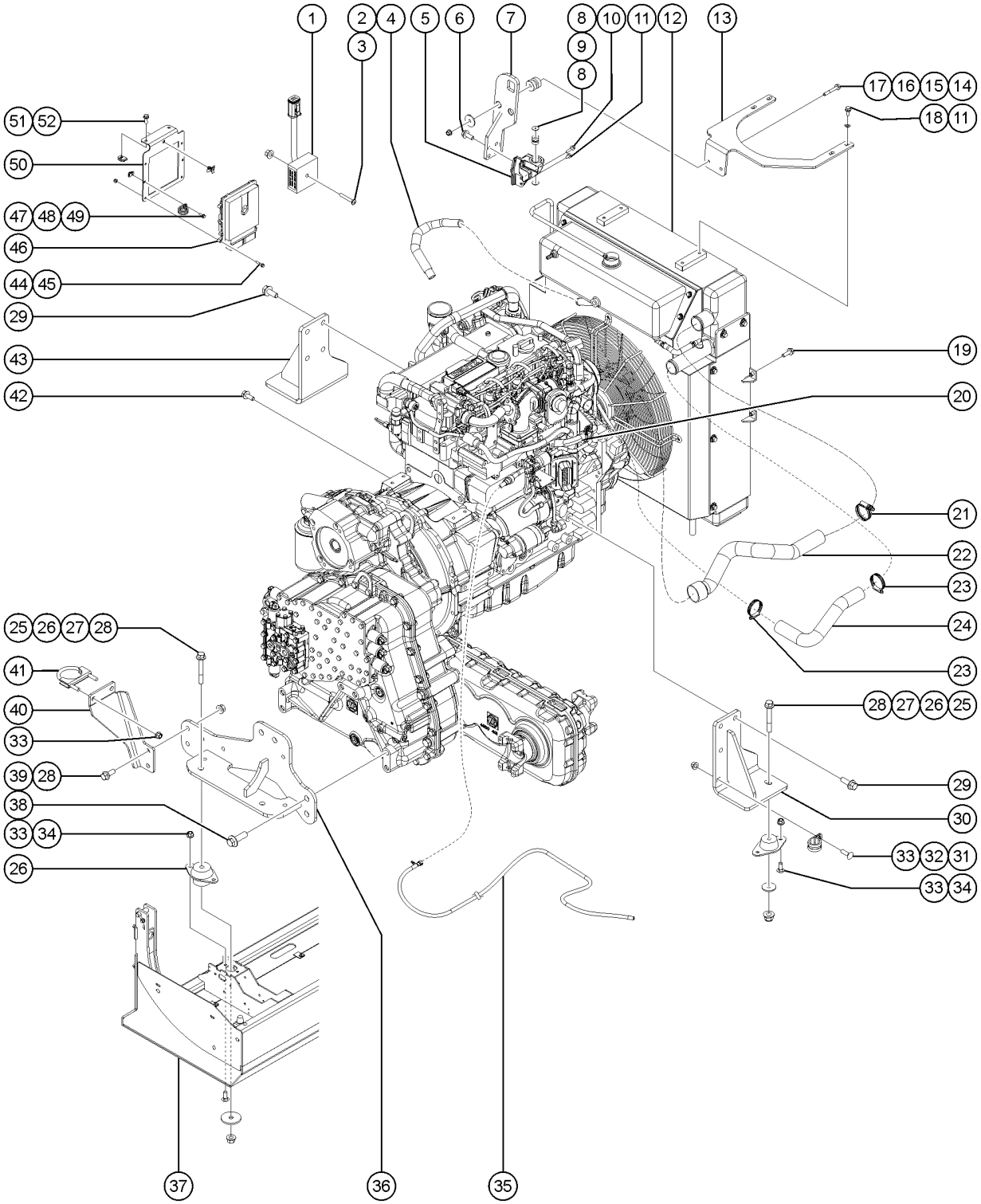

506.1 Deutz TCD3.6, T4F Engine, View 2

Item	Part No.	Description	Qty.
29	824134GT	SCREW,HHF,M12-1.75X30,DIN6921,10.9,ZAB	8
30	1290278GT	WELDMENT, MOTOR MOUNT, INBOARD	1
31	1255757GT	BOLT,CARRIAGE,3/8-16X1.25,5,ZAG	1
32	1269035GT	CLAMP,1.13,#18 X 1/2,RUB CUSH	1
33	1274322GT	NUT,NYLOCK FLG,3/8-16,F,ZAG	12
34	824125GT	BOLT, CARRIAGE, 3/8-16 X 1, 5, ZAG	8
35	1293925GT	HOSE,FUEL,RETURN,TCD3.6,T4F,10K	1
35-	1280083GT	QUICK CONNECT,FUEL,90 DEG,10MM	
36	1289914GT	WELDMENT, ZF TRANSMISSION MOUNT	1
37		Ref. ASSEMBLY,ENGINE TRAY,10K Refer to 203.1	1
38	1268716GT	SCREW,HHF,M16-2.0X50,DIN6921,10.9,ZAB	6
39	1255469GT	SCREW,HHF,1/2-13X1.25,8,ZAG	2
40	1292054GT	BRACKET,LONG,TAILPIPE MOUNT	1
41	71911GT	CLAMP,MUFFLER, 2.50 INCH	1
42	1255806GT	SCREW,HHF,M12-1.75X20,DIN6921,10.9,ZAB	
43	1290277GT	WELDMENT, MOTOR MOUNT,OUTBOARD	1
44	824080GT	SCREW, HHF, 1/4-20 X 1.25, 8, ZAG	4
45	1277924GT	NUT,NYLOCK FLG,1/4-20,F,ZAG	4
46	1257646GT	ECM,10K,TCD3.6,T4F	1
47	824078GT	SCREW,HHF,1/4-20X.75,8,ZAG	2
48	33784GT	CLAMP,1.31,#21 X 1/4,RUB CUSH	2
49	56912GT	SPRING CLIP,1/4-20,.025-.15X.54,ZAG	2
50	1296649GT	FORMING, 120HP ECU, GTH1056	1
51	824090GT	SCREW,HHF,3/8-16X1,8,ZAG	4
52	29868GT	SPRING CLIP,3/8-16,.05-.20X.73,ZAG	4

507.1 Deutz TCD3.6, T4F Engine, View 3

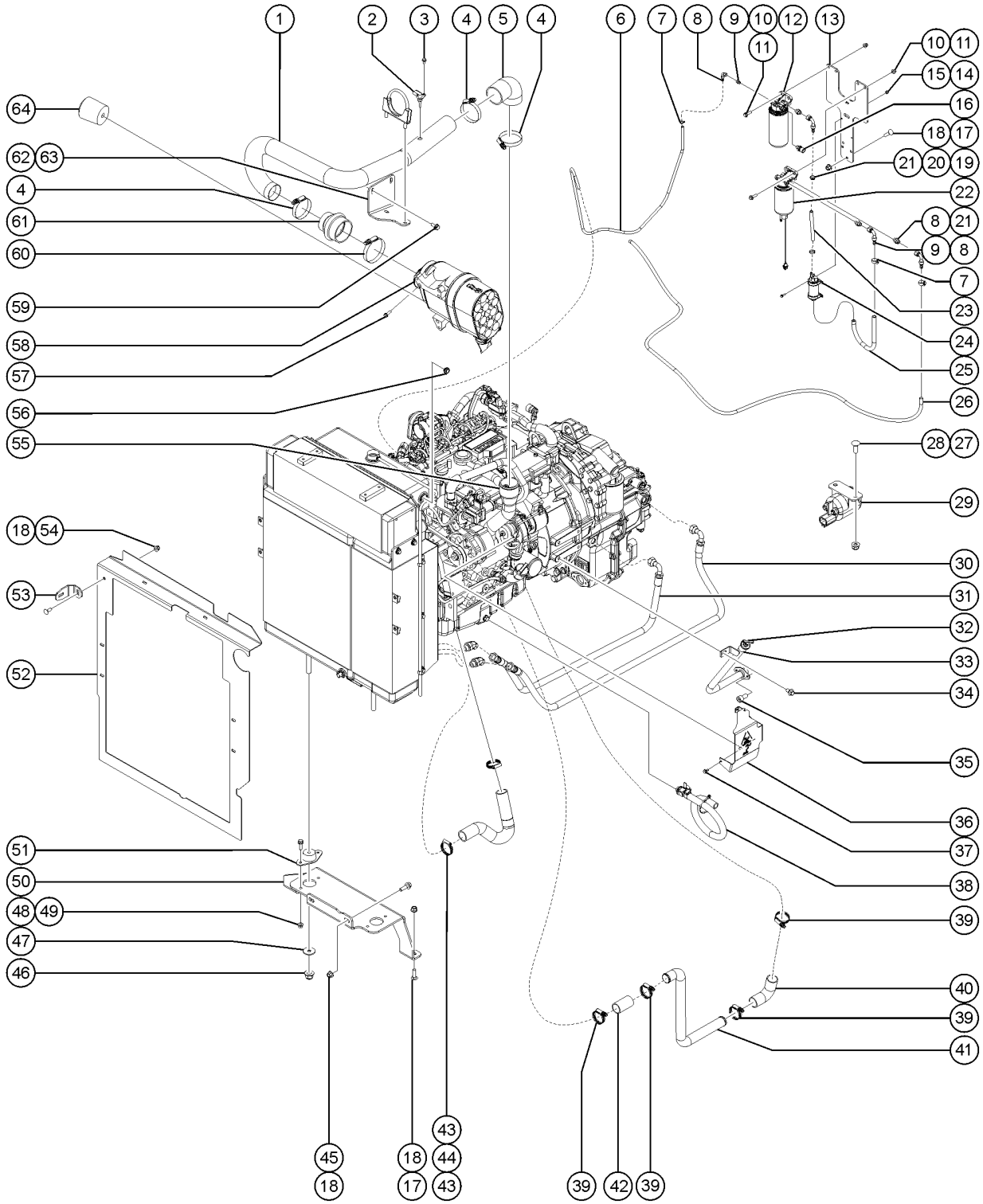

507.1 Deutz TCD3.6, T4F Engine, View 3

Item	Part No.	Description	Qty.
1	1258428GT	PIPE,INLET,TCD3.6,T4F,8K	1
2	1266547GT	SENSOR,TEMP,AMBIENT,T4F,TCD3.6	1
3	824077GT	SCREW, HHF, 1/4-20 X .5, 8, ZAG	1
4	1261460GT	CLAMP,HOSE,CT,SAE 48,2-9/16"	3
5	1257434GT	HOSE,ELBOW,RBR,2.75IS,3.13OD	1
6	1258480GT	HOSE,FUEL,ENGINE,TCD 3.6,T4F	1
7	46131GT	CLAMP,HOSE,.63" - 1.0" X .5"	3
8	1253641GT	ELBOW,90DEG,1/2" HOSE BARB	3
9	162209GT	FITTING,CONN,16MM-8MJ	2
10	231533GT	SCREW,HHF,M10-1.5X35,DIN6921,10.9,ZAB	4
11	1283015GT	NUT,NYLOCK FLG,M10-1.5,DIN6926,10,ZAB	4
12	823057GT	FILTER,FUEL,SPIN-ON TCD3.6	1
13	1295726GT	PLATE,FUEL FILTER BRACKET,3.6L	1
14	1283020GT	NUT,NYLOCK,M5-0.8,DIN985,10,ZAB	4
15	218458GT	SCREW,HHF,M5-0.8X20,DIN6921,10.9,ZAB	4
16	824673GT	SENSOR,LOW PRESSURE,DEUTZ 2.9L	1
17	1255757GT	BOLT,CARRIAGE,3/8-16X1.25,5,ZAG	5
18	1274322GT	NUT,NYLOCK FLG,3/8-16,F,ZAG	8
19	44909GT	CLAMP,HOSE,.25	3
20	1253642GT	ELBOW,90DEG,3/8" HOSE BARB	1
21	162208GT	FITTING,CONN,16MM-6MJ	2
22	236260GT	PRE-FILTER,FUEL,DEUTZ TCD3.6	1
23	823420-690GT	HOSE,FUEL,3/8,GATES RLA	1
24	236259GT	LIFT PUMP,FUEL,DEUTZ TCD3.6	1
25	823421GT	HOSE,FUEL,1/2,GATES RLA indicate length while ordering	1
26	1293924GT	HOSE,FUEL,SUPPLY,TCD3.6,T4F,10K	1
27	824124GT	BOLT, CARRIAGE, 1/4-20 X .75, 5, ZAG	2
28	1277924GT	NUT,NYLOCK FLG,1/4-20,F,ZAG	2

507.1 Deutz TCD3.6, T4F Engine, View 3

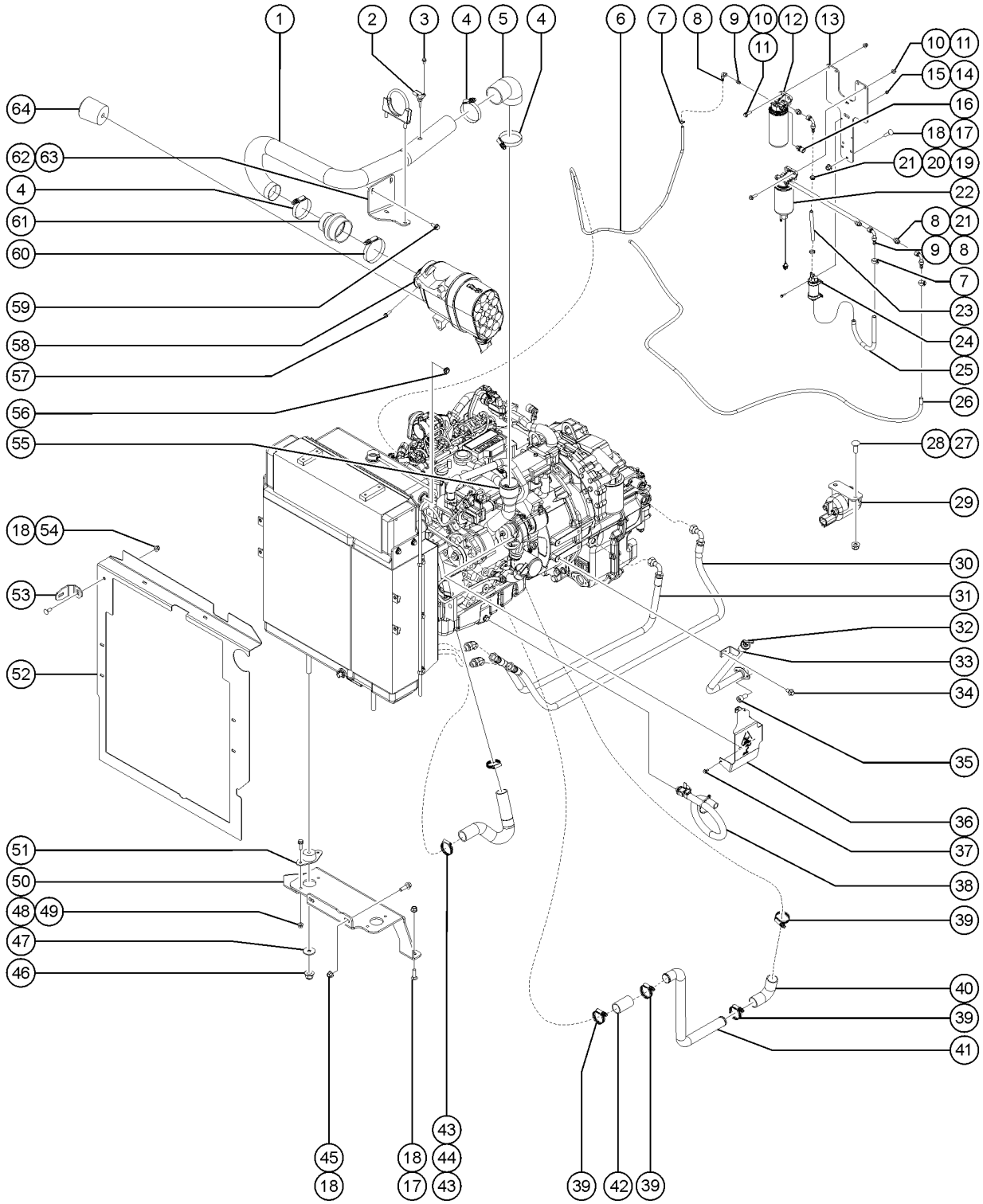

507.1 Deutz TCD3.6, T4F Engine, View 3

Item	Part No.	Description	Qty.
29	1254352GT	RELAY, SPST, 12V, 100A, SEALED	1
30	61073-6500GT	ASSY, HOSE, HYD, -12, 3000, STR, 90	1
30-	48846GT	HOSE END,FEMSW,90D,ORFS,-12-12	
30-	48841GT	HOSE END,FEM SW,ORFS,-12-12	
30-	48762-6500GT	HOSE,3/4",HYD	
31	61073-5500GT	ASSY, HOSE, HYD, -12, 3000, STR, 90	1
31-	48846GT	HOSE END,FEMSW,90D,ORFS,-12-12	
31-	48841GT	HOSE END,FEM SW,ORFS,-12-12	
31-	48762-5500GT	HOSE,3/4",HYD	
32	1291298GT	DIPSTICK,ZF TRANSMISSION,4/3SPD	1
33	1289690GT	WELDMENT, DIPSTICK TUBE, ZF TRANSMISSION, 4/3SPD	1
34	1255806GT	SCREW,HHF,M12-1.75X20,DIN6921,10.9,ZAB	1
35	1260002GT	SCREW,SHC,M8-1.25X16,DIN912, 1	2
36	1261344GT	FORMING,HEAT SHLD,TURBO,TCD3.6	1
37	1251983GT	SCREW,HHF,M8-1.25X16,DIN6921,10.9,ZAB	1
38	826377GT	ASSEMBLY,OIL DRAIN VALVE KIT	1
38-	826378GT	VALVE,OIL DRAIN,DEUTZ	
38-	19273GT	CLAMP,HOSE,.75 **	
38-	1702-2400GT	HOSE-HEATER,5/8 ID-BLACK	
38-	6578GT	CABLE TIE,7 3/8"	
39	215216GT	CLAMP,HOSE,CT,SAE 262,1-3/4" TO 2-5/8"	4
40	215219GT	SLEEVE,TUBE,CAC TURBO,TCD3.6	1
41	1264765GT	PIPE,CAC INLET,TCD3.6,T4F	1
42	215217GT	COUPLING,CAC,1.75X3.5 LONG	1
43	1261395GT	CLAMP,HOSE,ADJ,2" HOSE,DEUTZ T	2
44	1264767GT	HOSE,RAD. INLET,TCD3.6,T4F	1
45	824091GT	SCREW, HHF, 3/8-16 X 1.25, 8, ZAG	2
46	1283017GT	NUT,NYLOCK,FLG,M14-2.0,DIN6926,10,ZAB	2

507.1 Deutz TCD3.6, T4F Engine, View 3

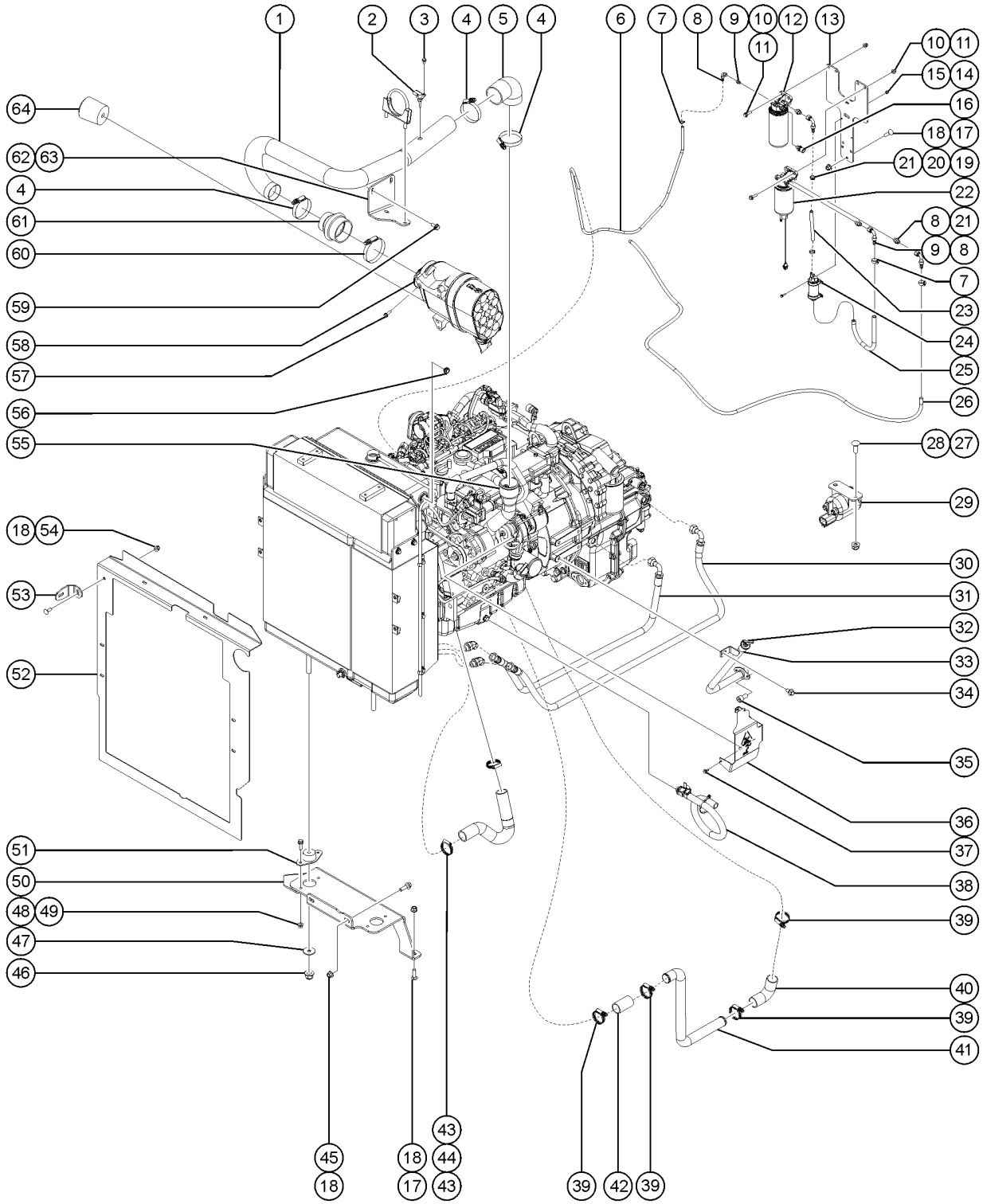

507.1 Deutz TCD3.6, T4F Engine, View 3

Item	Part No.	Description	Qty.
47	824120GT	WASHER,FLAT,.375X1.50X.125,ZAG	2
48	824086GT	SCREW,HHF,5/16-18X1,8,ZAG	4
49	1274167GT	NUT,NYLOCK FLG,5/16-18,F,ZAG	4
50	1290244GT	FORMING, RADIATOR MOUNT	1
51	T114350GT	ISOLATOR,RADIATOR,PERKINS	2
52	1296554GT	FORMING,BAFFLE,COOLER,GTH1056	1
53	1279230GT	FORMING, SUPPORT, BRACKET, SLOTTED,GTH844D	1
54	824125GT	BOLT, CARRIAGE, 3/8-16 X 1, 5, ZAG	1
55	1257339GT	INLET,TURBO,TCD 3.6,T4	1
56	1273074GT	SIGHT GLASS KIT	1
57	824133GT	SCREW,HHF,M8-1.25X25,DIN6921,10.9,ZAB	3
58	824991GT	ASSY, AIR FILTER, COMPLETE M+H IQORON V7	1
58-	1256219GT	FILTER,MAIN,M+H IQORON V7	
58-	1256220GT	FILTER,SECONDARY,M+H IQORON V7	
59	824132GT	SCREW,HHF,M8-1.25X20,DIN6921,10.9,ZAB	2
60	1261461GT	CLAMP,HOSE,CT,SAE 412,3-1/4" TO 4-1/8"	1
61	825560GT	REDUCER,HUMP HOSE,3.5"-2.75"	1
62	1258436GT	FORMING,PIPE,INLET,TCD3.6,T4F	1
63	1264286GT	CLAMP,MUFFLER,2.75 I.D.,FLAT	1
64	1307897GT	GAUGE,AIR RESTRICTION,50M-BAR	1

508.1 Deutz TCD3.6, T4F Engine, View 4

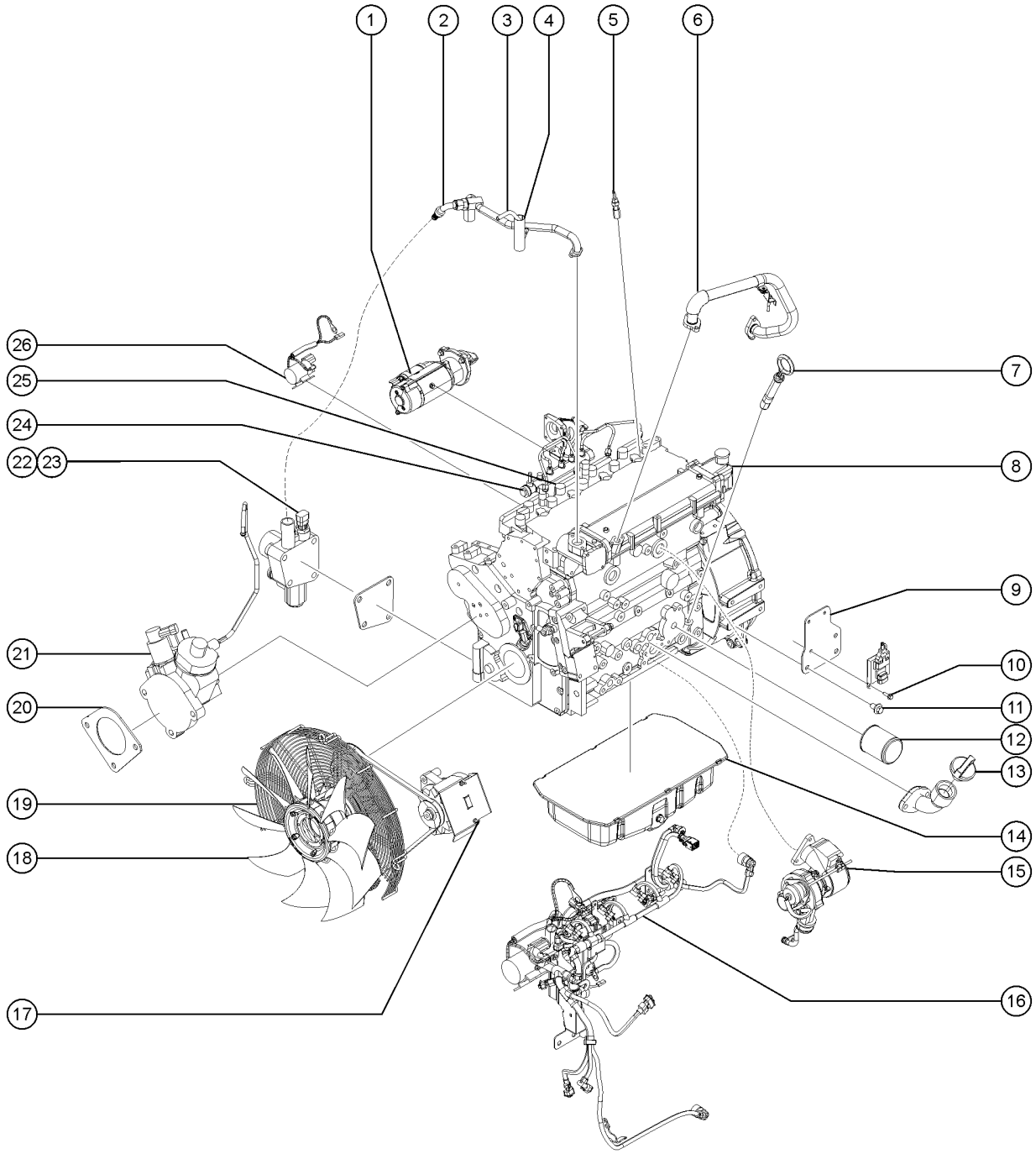

508.1 Deutz TCD3.6, T4F Engine, View 4

Item	Part No.	Description	Qty.
1	1289747GT	STARTER, DEUTZ TCD 3.6,T4F,10K (no longer available)	1
1-	1313554GT	STARTER	1
1-	1313555GT	HEXAGON NUT	1
1-	1313556GT	HEXAGON BOLT	3
2	1257635GT	HOSE,COOLANT,EGR,TCD3.6 T4F	1
3	1279744GT	HOSE,COOLANT,5/16" DIA,12"	1
4	1283445GT	WRAP,FIBERGLASS,HEAT RESISTANT,4"	1
5	1257350GT	GLOW PLUG,TCD 3.6,T4F	4
6	1257637GT	INLET,TURBO,TCD 3.6,T4	1
7	1257386GT	DIPSTICK,TCD3.6 T4F	1
8	1257329GT	MODULE,EGR,TCD3.6 T4F	1
9	1265401GT	WELDMENT,NOX SENSOR,TCD3.6,8K	1
10	231532GT	SCREW,HHF,M6-1.0X20,DIN6921,10.9,ZAB	2
11	1255806GT	SCREW,HHF,M12-1.75X20,DIN6921,10.9,ZAB	2
12	49924GT	FILTER,OIL,DEUTZ F4L1011F	1
13	1257352GT	CAP,OIL FILLER,TCD 3.6,T4F	1
14	236243GT	OIL PAN, DEUTZ TCD3.6	1
15	1257340GT	TURBO,TCD 3.6,T4F	1
15-	824775GT	CLAMP,TURBO OUTLET-TURBO PIPE	1
16	1257347GT	HARNESS,ENGINE BASE,TCD 3.6,T4	1
16-	824673GT	SENSOR,LOW PRESSURE,DEUTZ 2.9L	1
17	1263497GT	FORMING.GUARD,ALT,TCD3.6	1
17-	1257344GT	ALTERNATOR,TCD3.6 T4F	
17-	1264484GT	WASHER,FLAT,#10,USS,ZAG	
17-	1263973GT	FORMING.GUARD,ALT,TCD3.6	
17-	1263498GT	CAP, THREAD, 10-32	
17-	1253185GT	WASHER,FLAT,#10,USS,ZAG	
18	219329GT	FAN,RADIATOR,DEUTZ TCD3.6, 10K	1

508.1 Deutz TCD3.6, T4F Engine, View 4

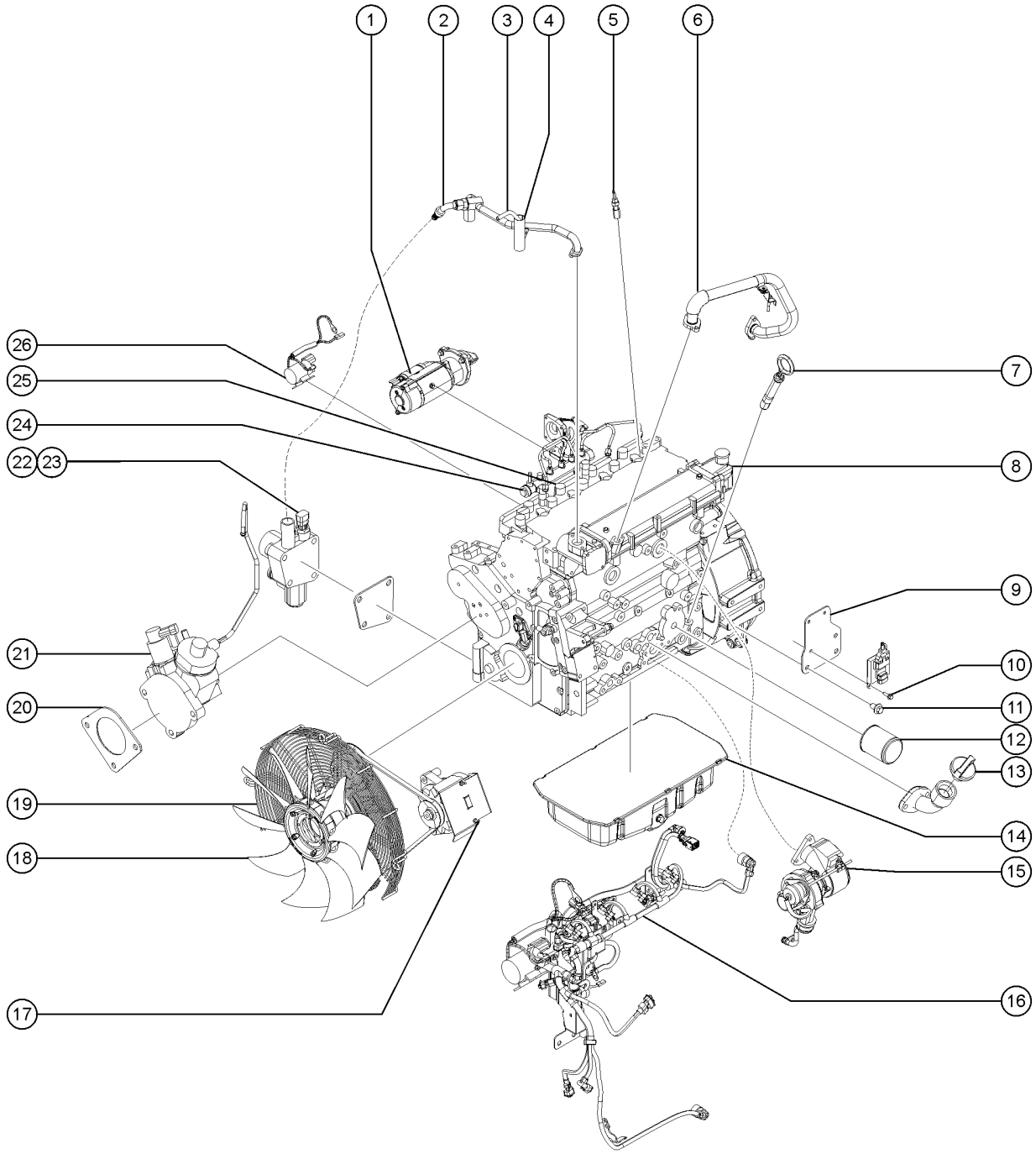

508.1 Deutz TCD3.6, T4F Engine, View 4

Item	Part No.	Description	Qty.
18-	1257629GT	SPACER,FAN,TCD 3.6,T4F	1
18-	236267GT	V-BELT,ALTERNATOR,DEUTZ TCD3.6	
18-	1257318GT	BELT,DRIVE,TCD 3.6,T4F	
19	1257362GT	FAN GUARD,TCD3.6 T4F	1
20	1257313GT	GASKET,PUMP,FUEL,TCD3.6 T4F	1
21	1257312GT	PUMP,FUEL,TCD3.6 T4F	1
22	1257335GT	HOUSING,THERMOSTAT,TCD3.6 T4F	1
23	1257337GT	GASKET,THERMOSTAT,TCD3.6 T4F	1
24	1257314GT	RAIL,INJECTION,FUEL,TCD3.6,T4F	1
25	1257315GT	INJECTOR,TCD3.6 T4F	4
26	1257343GT	RELAY,STARTER,TCD 3.6,T4F	1

509.1 Deutz TCD3.6, T4F Engine, View 5

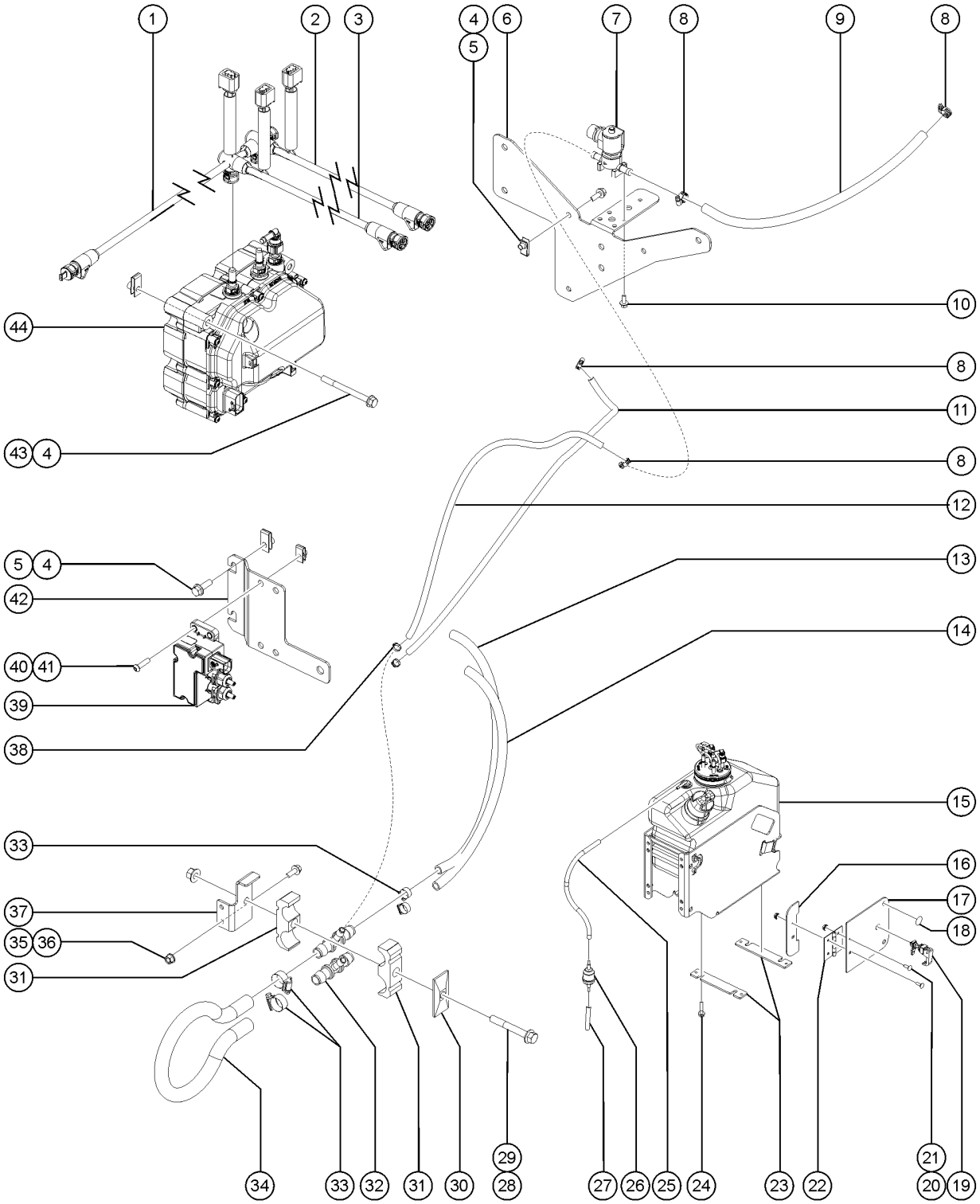

509.1 Deutz TCD3.6, T4F Engine, View 5

Item	Part No.	Description	Qty.
1	1283342GT	HOSE,FLEX,HEATED,PRESSURE,DEF,42 IN L,T4F	1
1-	1268771GT	COUPLING,90DEG,J2044,10MMX3/8"BRB	
2	1283344GT	HOSE,FLEX,HEATED,RETURN,DEF,24in L,T4F (No Longer Available,Replaced By 1258475GT)	1
2B	1258475GT	HOSE,HEATED,RETURN,DEF,8K	1
3	1283343GT	HOSE,FLEX,HEATED,SUCTION,DEF,24IN L,T4F (No Longer Available,Replaced By 1258474GT)	1
3B	1258474GT	HOSE,HEATED,SUCTION,DEF,8K	1
4	36456GT	SPRING CLIP,5/16-18,.025-.15X.	8
5	824086GT	SCREW,HHF,5/16-18X1,8,ZAG	5
6	1291456GT	FORMING, VALVE MOUNT	1
7	1260900GT	VALVE,DEF COOLANT,TCD3.6,T4F	1
8	21465GT	CLAMP,HOSE,.25" - .63" X .3125	4
9	1294863-1850GT	HOSE,COOLANT,3/8",GR	1
10	824131GT	SCREW,HHF,M6-1.0X16,DIN6921,10.9,ZAB	4
11	1264545-6000GT	HOSE,COOLANT,3/8,BLUE,801, 60"	1
12	1294863-4300GT	HOSE,COOLANT,3/8",GR	1
13	1294864-3600GT	HOSE,COOLANT,5/8",GR,36"	1
14	1264546-3600GT	HOSE,COOLANT,5/8,BLUE,801,36"	1
15	1257796GT	ASSEMBLY,DEF TANK,10L,10K	1
15-	1288323GT	CONTACT DEUTZ WITH ENGINE S/N TO GET SUPPLIER P/N	
15-	1257782GT	HEADER,DEF TANK,10L	
15-	1257783GT	CAP,FILLER,DEF TANK,10L USE UNTIL EXHAUSTED	
15-	1258439GT	ASSY,CARRIER,DEF TANK,10L	
15-	1258440GT	VENT, DEF TANK,10L	
16	825949GT	PLATE,FUEL DOOR MOUNT	1
17	1262442GT	PLATE,DOOR,FUEL	1
18	47478GT	BUMPER, RUBBER, 1"OD X .461H	2
19	1255454GT	LATCH,SOUTHCO 62-10-35	1
20	824124GT	BOLT, CARRIAGE, 1/4-20 X .75, 5, ZAG	4

509.1 Deutz TCD3.6, T4F Engine, View 5

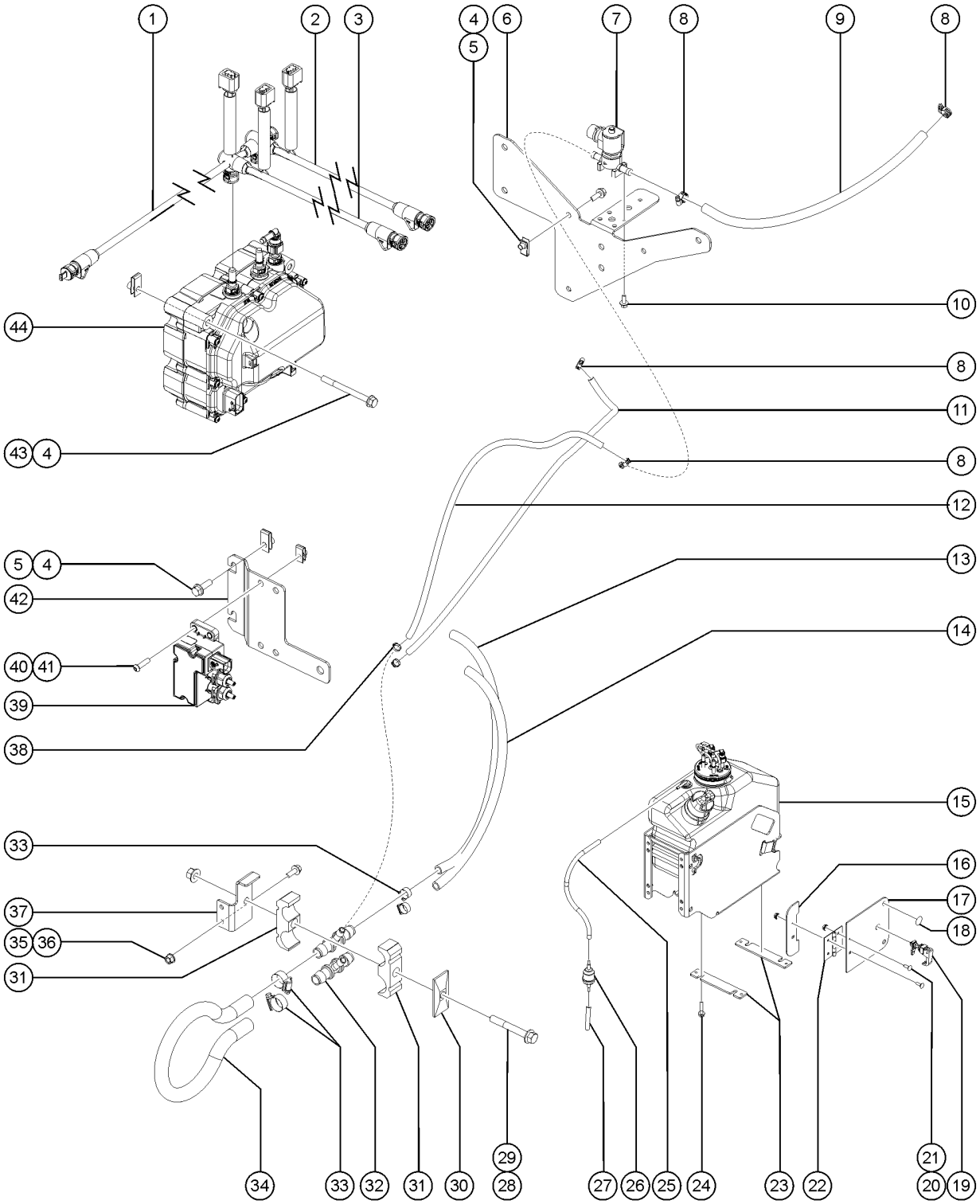

509.1 Deutz TCD3.6, T4F Engine, View 5

Item	Part No.	Description	Qty.
21	1256679GT	NUT,SERRATED,1/4-20,8,ZAG	4
22	42077GT	HINGE, 2 X 1.50	1
23	1277558GT	PLATE,DEF TANK MTG,TCD 3.6,10L	2
24	237820GT	SCREW,HHF,M8X40,DIN6921,8.8,YZ	4
25	1263446GT	HOSE,1/4 FUEL LINE,14LG	1
26	1263069GT	FILTER,INLINE,FUEL,MANN+HUMMEL	1
27	1263447GT	HOSE,1/4 FUEL LINE,3LG	1
28	824094GT	SCREW, HHF, 3/8-16 X 2.75, 8, ZAG	1
29	1274322GT	NUT,NYLOCK FLG,3/8-16,F,ZAG	1
30	123177GT	CLAMP CVR PLATE,TWIN,GRP 3	1
31	123538GT	CLAMP HALVES,TWIN,EXTEND	2
32	1264529GT	TEE,5/8 X 5/8 X 3/8,BARB,NYLON	2
33	46131GT	CLAMP,HOSE,.63" - 1.0" X .5"	4
34	1294864-2900GT	HOSE,COOLANT,5/8",GR	1
35	824027GT	NUT, TL FLG, 1/4-20, G, ZAG	2
36	824078GT	SCREW,HHF,1/4-20X.75,8,ZAG	2
37	1294053GT	FORMING,HOSE CLAMP MOUNT	1
38	44909GT	CLAMP,HOSE,.25	2
39	1257786GT	MODULE,CAN INT,DEF,TCD3.6,T4F	1
40	824227GT	SCREW, BHC, 1/4-20 X 1, ZAG	4
41	56912GT	SPRING CLIP,1/4-20,.025-.15X.54,ZAG	4
42	1291071GT	FORMING,MNT,DEF CONT,TCD3.6	1
43	1262813GT	SCREW,HHF,5/16-18X3.5,8,ZAG	3
44	1257797GT	ASSY,MODULE,SUPPLY,DEF,TCD3.6	1
44-	1257785GT	FILTER,SM,DEF,TCD 3.6	
44-	1257784GT	MODULE,SUPPLY,DEF,TCD 3.6	

510.1 Deutz TCD3.6, 74HP T4F Engine, View 1

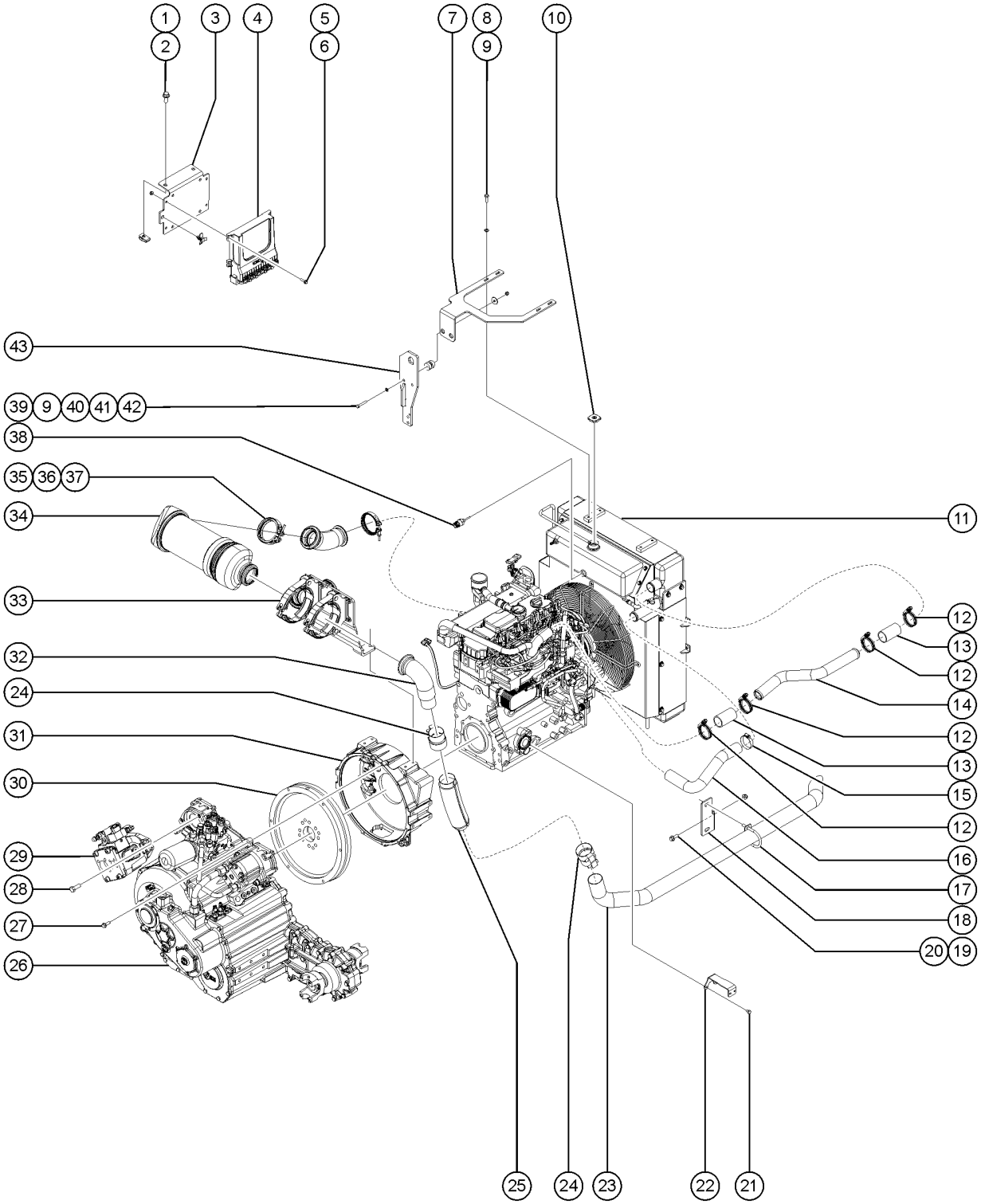

510.1 Deutz TCD3.6, 74HP T4F Engine, View 1

Item	Part No.	Description	Qty.
1	824090GT	SCREW,HHF,3/8-16X1,8,ZAG	2
2	29868GT	SPRING CLIP,3/8-16,.05-.20X.73,ZAG	2
3	1296650GT	FORMING, ECU AND FUSE BOX MOUNT, GTH1056	1
4	1291774GT	ECU,CVT TRANSMISSION	1
5	218458GT	SCREW,HHF,M5-0.8X20,DIN6921,10.9,ZAB	4
6	1255753GT	NUT,FLG,M5-0.8,DIN6923,8,ZAB	4
7	1279662GT	WELDMENT,RAD MOUNT,TCD3.6	1
8	824136GT	SCREW, HHC, M8-1.25 X 25, DIN933, 10.9, ZAB	4
9	824144GT	WASHER,FLAT,M8,DIN125,ZAB	10 6
10	1279661GT	CAP,RADIATOR,TCD3.6	1
11	1257361GT	RADIATOR,TCD3.6 T4F	1
12	215216GT	CLAMP,HOSE,CT,SAE 262,1-3/4" TO 2-5/8"	6 4
13	215217GT	COUPLING,CAC,1.75X3.5 LONG	3 2
14	236274GT	PIPE,CAC OUTLET,DEUTZ TCD3.6	1
15	35434GT	CLAMP,HOSE,2.00***	3 1
16	1264768GT	HOSE,RAD. OULET,TCD3.6,T4F	1
17	71911GT	CLAMP,MUFFLER, 2.50 INCH	2
18	1290411GT	FORMING, TAILPIPE MOUNT	1
19	824078GT	SCREW,HHF,1/4-20X.75,8,ZAG	2
20	1277924GT	NUT,NYLOCK FLG,1/4-20,F,ZAG	2
21	1257704GT	SCREW,HHC,M8-1.25X12,DIN933,10.9,ZAB	2
22	1291436GT	FORMING,BAT CABLE MNT,10K DTZ	1
23	228578GT	TUBE, TAILPIPE, 2" PERKINS	1
24	234962GT	CLAMP,EXHAUST,2.5"	2
25	1292060GT	WRAP,HEAT SHIELD,13"X29",10K	1
25-	234961GT	TUBE,EXHAUST,FLEX-PIPE,2.5"ID X 12"L	
26		Ref. ASSY, TRANSMISSION, CVT Refer to 206.1	1
26-	232874GT	SCREW,HHF,M10-1.5X30,DIN6921,10.9,ZAB	12

510.1 Deutz TCD3.6, 74HP T4F Engine, View 1

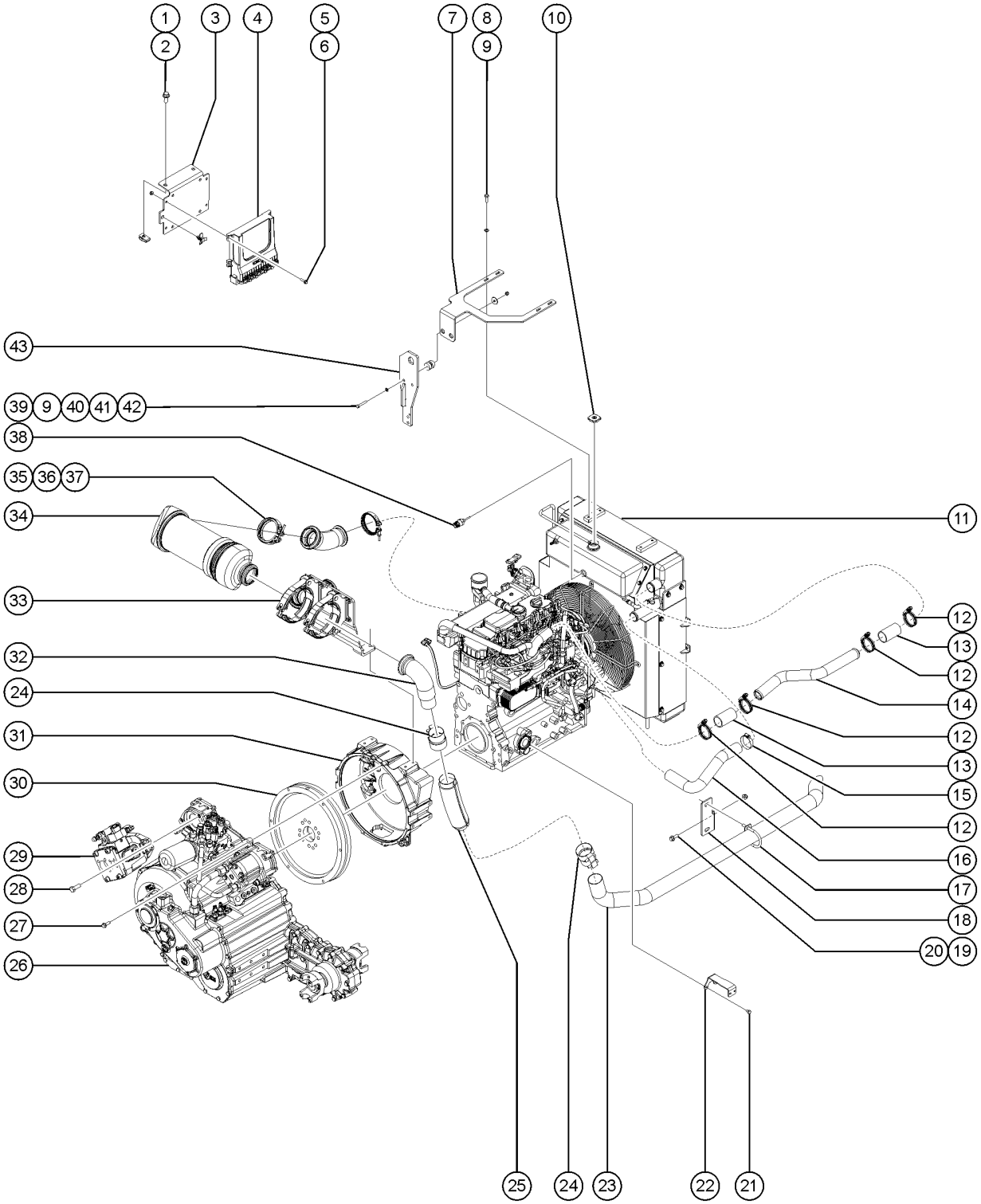

510.1 Deutz TCD3.6, 74HP T4F Engine, View 1

Item	Part No.	Description	Qty.
27	232874GT	SCREW,HHF,M10-1.5X30,DIN6921,10.9,ZAB	9
28	1260225GT	SCREW,HHC,M14-2.0X40,DIN933,10	2
29	1292741GT	EATON PN 421AK02304C, 3.80CID (62CC) 420 CODE C	1
30	236249GT	FLYWHEEL,DEUTZ TCD3.6	1
31	219321GT	FLYWHL HOUSING,DTZ TCD3.6, 10K	1
32	214354GT	PIPE,DOC OUTLET ELBOW	1
33	236275GT	MOUNT,DOC,DEUTZ TCD3.6	1
34	1286789GT	MUFFLER,DOC,DEUTZ TCD3.6 74HP/ TD2.9	1
35	824776GT	CLAMP,TURBO PIPE-DOC,DEUTZ TCD	1
36	825249GT	PIPE,DOC EXHAUST ELBOW	1
36-	824777GT	GASKET,TURBO PIPE-DOC,DEUTZ TC	1
37	824775GT	CLAMP,TURBO OUTLET-TURBO PIPE	1
38	218715GT	COOLNT LEVL SENSR, DEUTZTCD3.6	1
38-	1279746GT	GASKET,COOLANT LEVEL,TCD3.6 use until exhausted	
38B-	1293864GT	SEALING RING	
39	67349GT	SCREW,HHC,M8 X 50	2
40	236334GT	ISOLATOR,UP RADIATOR SUPPORT	2
41	823059GT	WASHER,SNUBBING,M8	2
42	25368GT	NUT,NYLOCK,M8X1.25	2
43	1279663GT	WELDMENT, ENGINE LIFT,TCD3.6	1

511.1 Deutz TCD3.6, 74HP T4F Engine, View 2

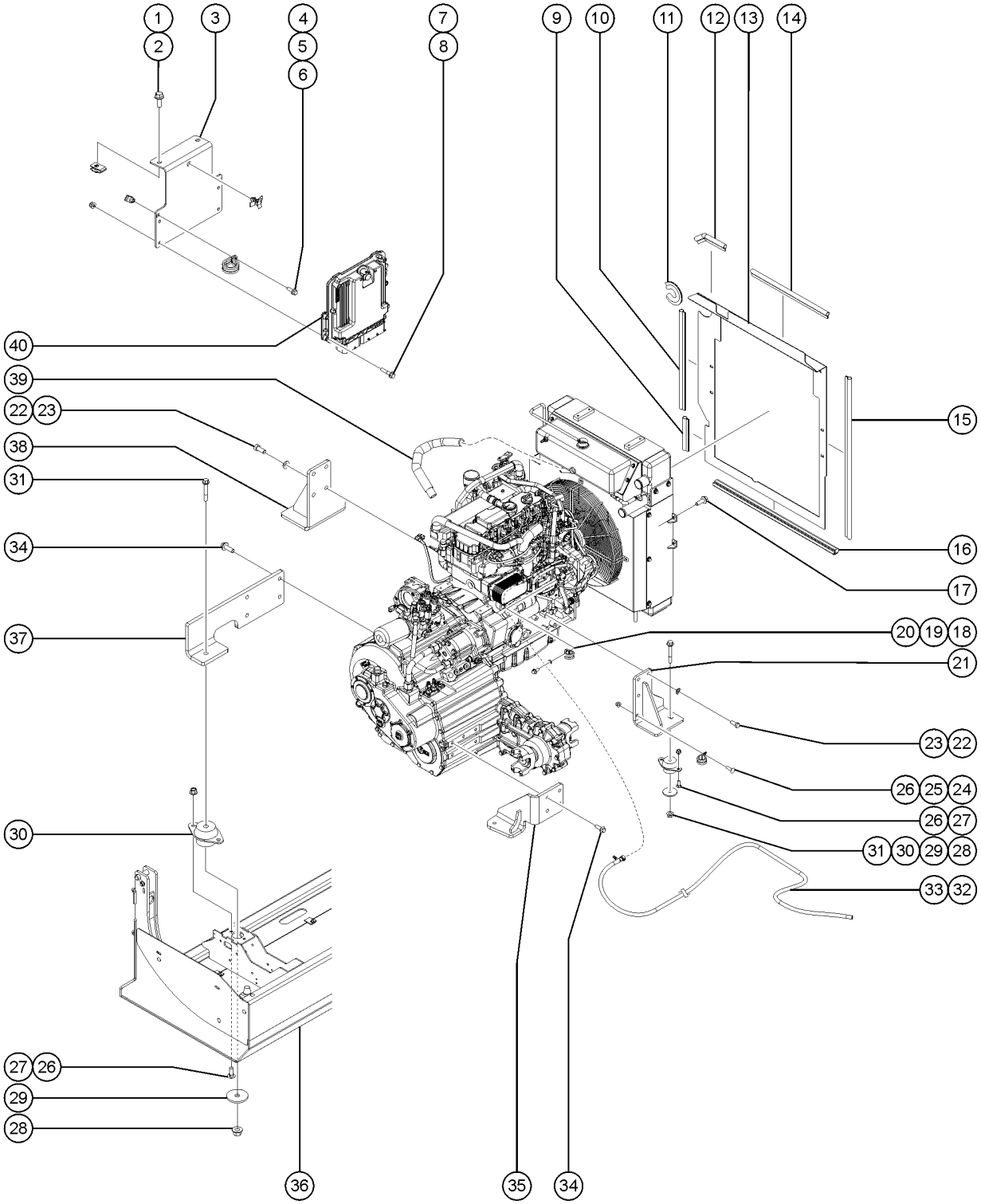

511.1 Deutz TCD3.6, 74HP T4F Engine, View 2

Item	Part No.	Description	Qty.
1	824090GT	SCREW,HHF,3/8-16X1,8,ZAG	2
2	29868GT	SPRING CLIP,3/8-16,.05-.20X.73,ZAG	2
3	1296651GT	FORMING, DEUTZ ECU, GTH1056	1
4	824078GT	SCREW,HHF,1/4-20X.75,8,ZAG	2
5	33784GT	CLAMP,1.31,#21 X 1/4,RUB CUSH	2
6	56912GT	SPRING CLIP,1/4-20,.025-.15X.54,ZAG	2
7	824079GT	SCREW,HHF,1/4-20X1,8,ZAG	4
8	1277924GT	NUT,NYLOCK FLG,1/4-20,F,ZAG	4
9	119219-675GT	TRIM,EDGE,1/8X3/4 END BULB	1
10	119219-2075GT	TRIM,EDGE,1/8X3/4 END BULB	1
11	119219-800GT	TRIM,EDGE,1/8X3/4 END BULB	1
12	119219-750GT	TRIM,EDGE,1/8X3/4 END BULB	1
13	1296554GT	FORMING,BAFFLE,COOLER,GTH1056	1
14	119219-1863GT	TRIM,EDGE,1/8X3/4 END BULB	1
15	119219-3400GT	TRIM,EDGE,1/8X3/4 END BULB	1
16	60875-2963GT	TRIM, RUBBER "D" SEAL, 3/16	1
17	824133GT	SCREW,HHF,M8-1.25X25,DIN6921,10.9,ZAB	1
18	49863GT	CLAMP,1.13,#18 X 3/8,RUB CUSH*	1
19	824132GT	SCREW,HHF,M8-1.25X20,DIN6921,10.9,ZAB	1
20	824144GT	WASHER,FLAT,M8,DIN125,ZAB	1
21	1290278GT	WELDMENT, MOTOR MOUNT, INBOARD	1
22	49381GT	SCREW,HHC,M12 X 30	4
23	49410GT	WASHER, FLAT, M12	4
24	1255757GT	BOLT,CARRIAGE,3/8-16X1.25,5,ZAG	1
25	1269035GT	CLAMP,1.13,#18 X 1/2,RUB CUSH	1
26	1274322GT	NUT,NYLOCK FLG,3/8-16,F,ZAG	9
27	824125GT	BOLT, CARRIAGE, 3/8-16 X 1, 5, ZAG	8
28	1274172GT	NUT,NYLOCK FLG,1/2-13,G,ZAG	4

511.1 Deutz TCD3.6, 74HP T4F Engine, View 2

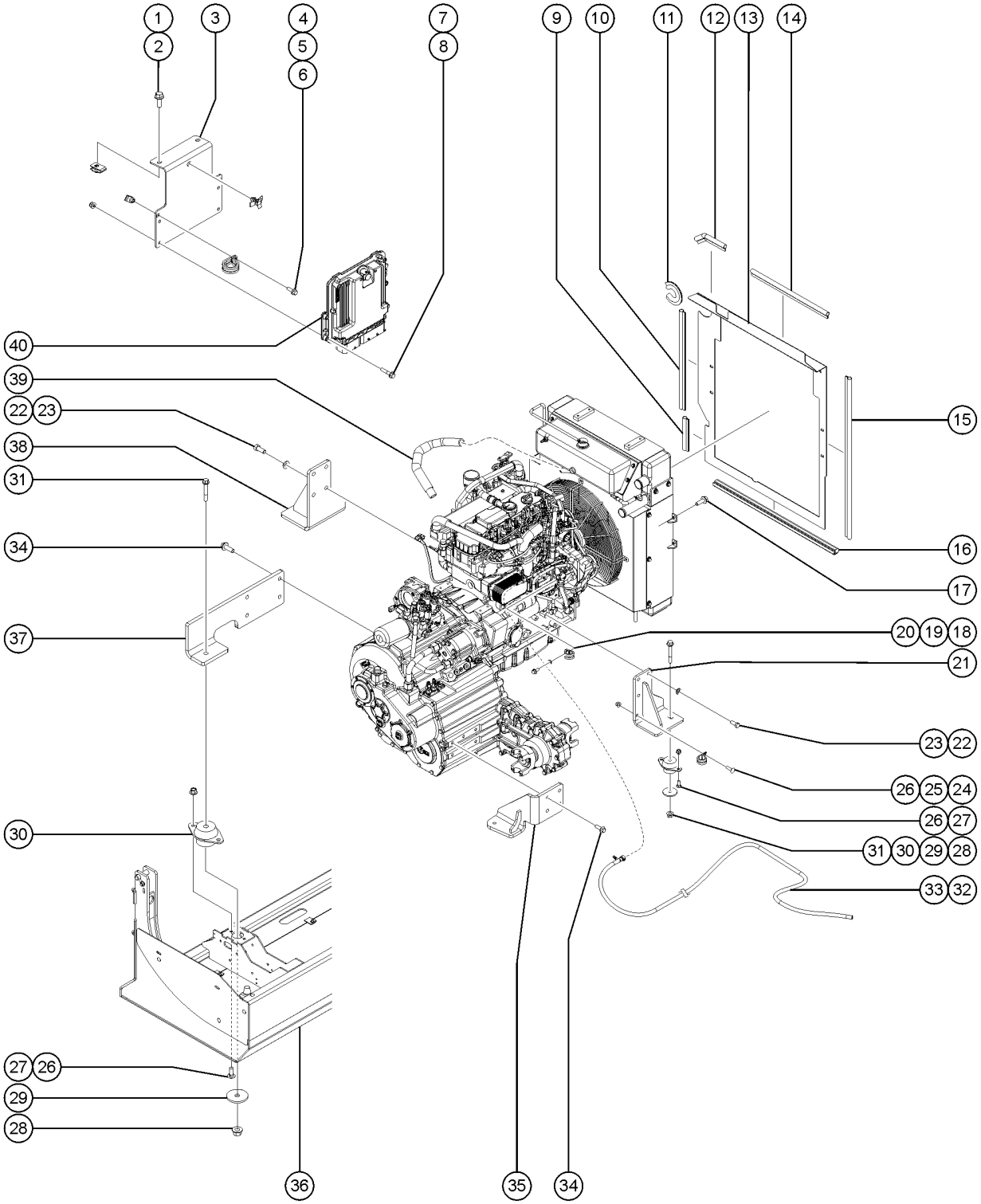

511.1 Deutz TCD3.6, 74HP T4F Engine, View 2

Item	Part No.	Description	Qty.
29	1256283GT	WASHER,FLAT,.5X2.25X.188,ZAG	4
30	822621GT	ISOLATOR,ENGINE,570LB MAX	4
31	1256851GT	SCREW,HHF,1/2-13X3.5,8,ZAG	4
32	1293925GT	HOSE,FUEL,RETURN,TCD3.6,T4F,10K	1
33	1280083GT	QUICK CONNECT,FUEL,90 DEG,10MM	1
34	231511GT	SCREW,HHF,M12-1.75X35,DIN6921,10.9,ZAB	8
35	1291483GT	WELDMENT, CVT MOUNT, INBOARD	1
36		Ref. ASSEMBLY,ENGINE TRAY,10K Refer to 203.1	1
37	1291486GT	FORMING, CVT MOUNT, OUTBOARD	1
38	1290277GT	WELDMENT, MOTOR MOUNT,OUTBOARD	1
39	1257363GT	HOSE,COMP,TCD3.6,T4F	1
40	1267794GT	ECM, DEUTZ TCD3.6L, 74HP, T4F	1

512.1 Deutz TCD3.6, 74HP T4F Engine, View 3

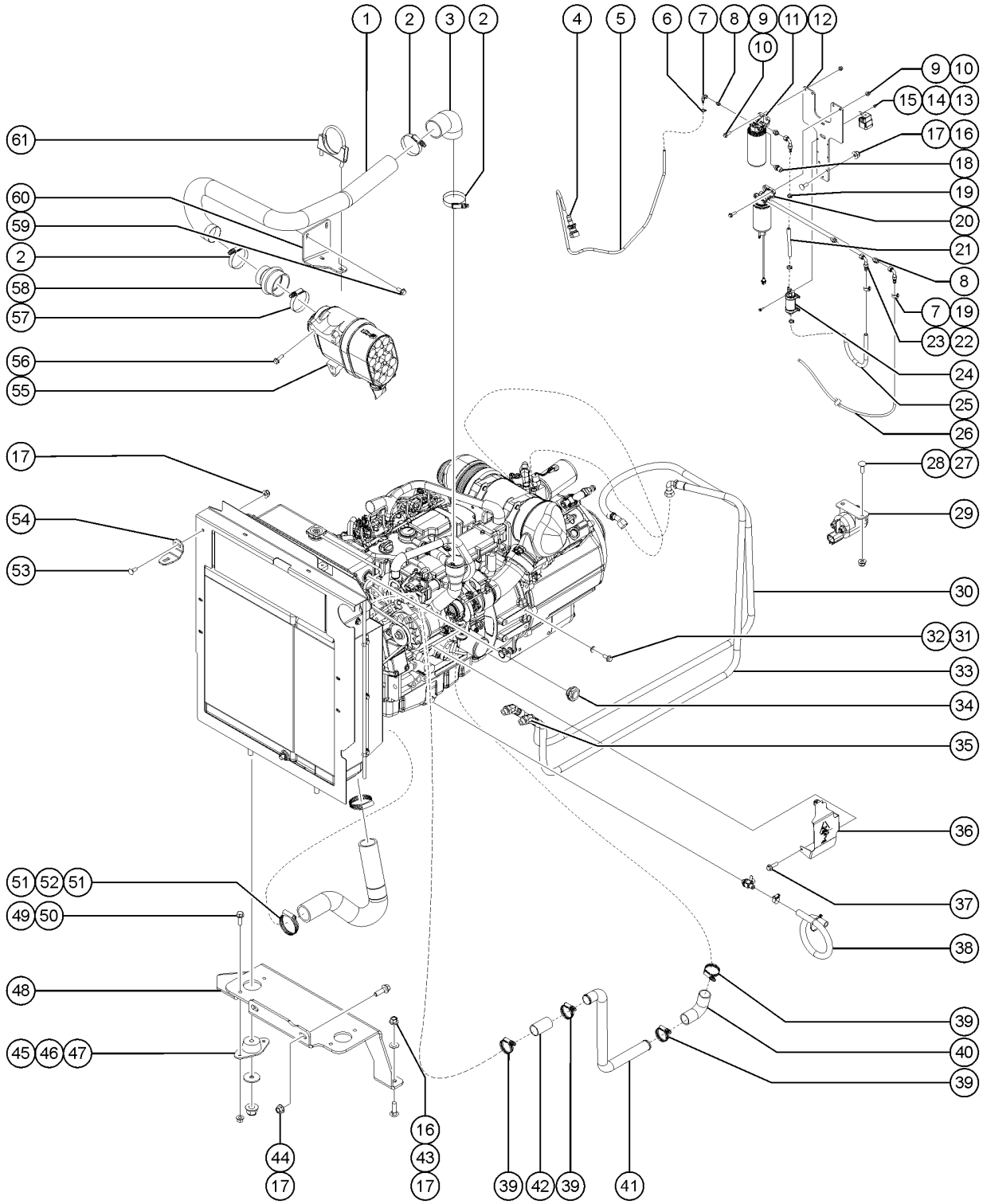

512.1 Deutz TCD3.6, 74HP T4F Engine, View 3

Item	Part No.	Description	Qty.
1	1264664GT	PIPE,INLET,TCD3.6,T4F,74HP 8K	1
2	1261460GT	CLAMP,HOSE,CT,SAE 48,2-9/16"	3
3	1257434GT	HOSE,ELBOW,RBR,2.75IS,3.13OD	1
4	1280082GT	QUICK CONNECT,FUEL,STRT,12MM	1
5	823421GT	HOSE,FUEL,1/2,GATES RLA	96 inches
6	46131GT	CLAMP,HOSE,.63" - 1.0" X .5"	2
7	1253641GT	ELBOW,90DEG,1/2" HOSE BARB	2
8	162209GT	FITTING,CONN,16MM-8MJ	2
9	231533GT	SCREW,HHF,M10-1.5X35,DIN6921,10.9,ZAB	4
10	1283015GT	NUT,NYLOCK FLG,M10-1.5,DIN6926,10,ZAB	4
11	236266GT	FILTER,FUEL,DEUTZ TCD3.6	1
12	1295726GT	PLATE,FUEL FILTER BRACKET,3.6L	1
13	1283020GT	NUT,NYLOCK,M5-0.8,DIN985,10,ZAB	4
14	60521GT	RELAY,SEALED 30/40 AMP	1
15	218458GT	SCREW,HHF,M5-0.8X20,DIN6921,10.9,ZAB	4
16	1255757GT	BOLT,CARRIAGE,3/8-16X1.25,5,ZAG	5
17	1274322GT	NUT,NYLOCK FLG,3/8-16,F,ZAG	8
18	824673GT	SENSOR,LOW PRESSURE,DEUTZ 2.9L	2
19	44909GT	CLAMP,HOSE,.25	3
20	236260GT	PRE-FILTER,FUEL,DEUTZ TCD3.6	1
21	823420-690GT	HOSE,FUEL,3/8,GATES RLA	1
22	1253642GT	ELBOW,90DEG,3/8" HOSE BARB	1
23	162208GT	FITTING,CONN,16MM-6MJ	1
24	236259GT	LIFT PUMP,FUEL,DEUTZ TCD3.6	1
25	823421GT	HOSE,FUEL,1/2,GATES RLA indicate length while ordering	
26	1293924GT	HOSE,FUEL,SUPPLY,TCD3.6,T4F,10K	1
27	824124GT	BOLT, CARRIAGE, 1/4-20 X .75, 5, ZAG	2

512.1 Deutz TCD3.6, 74HP T4F Engine, View 3

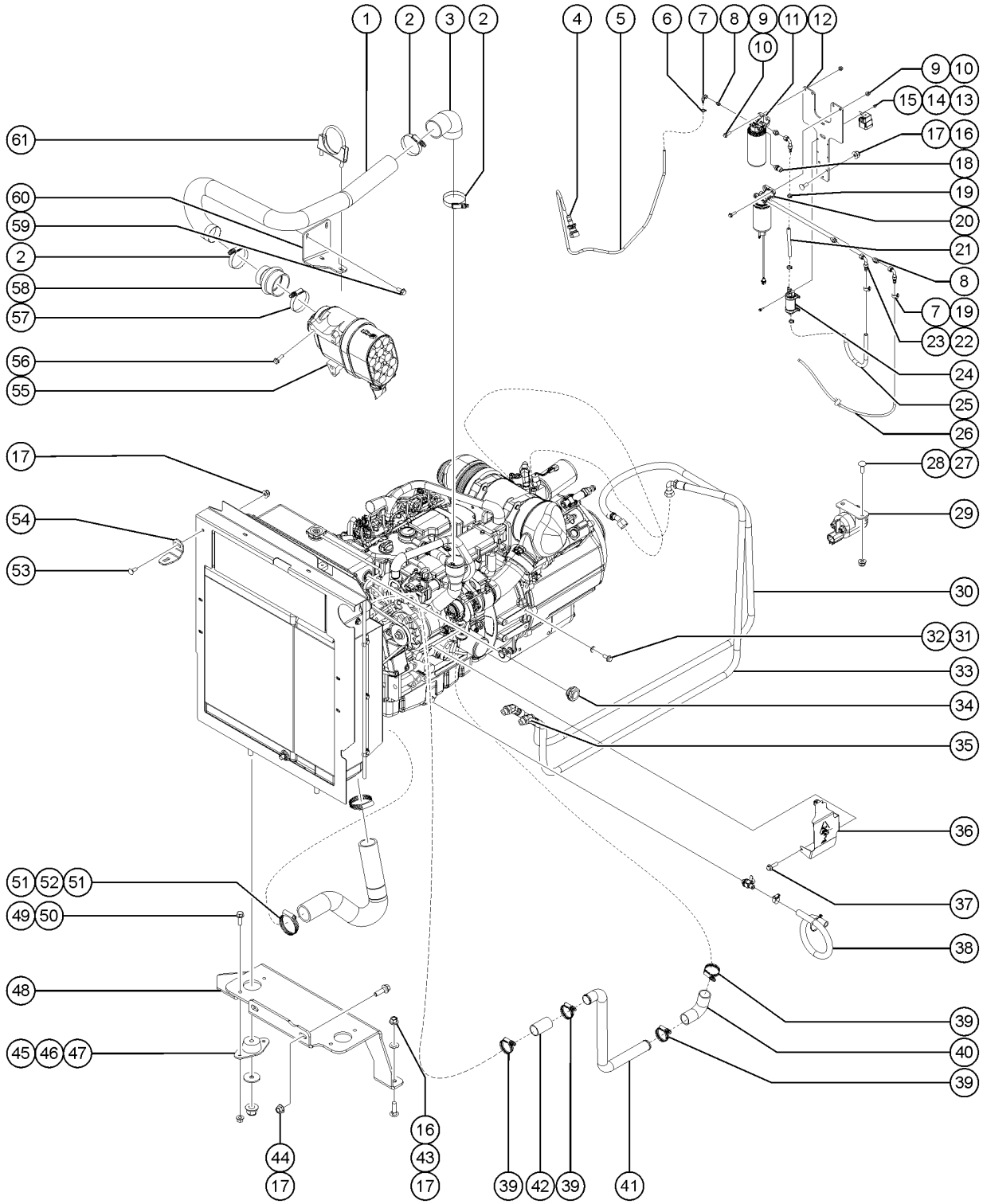

512.1 Deutz TCD3.6, 74HP T4F Engine, View 3

Item	Part No.	Description	Qty.
28	1277924GT	NUT,NYLOCK FLG,1/4-20,F,ZAG	2
29	1254352GT	RELAY, SPST, 12V, 100A, SEALED	1
30	61072-8700GT	ASSY, HOSE, HYD, -12, 3000, STR, 45 use until exhuasted, replaced by 61072-9500GT	1
30B	61072-9500GT	ASSY, HOSE, HYD, -12, 3000, STR, 45	1
31	1258505GT	SCREW,HHC,M12-1.75X20,DIN933,10.9,ZAB	1
32	1256286GT	WASHER,LOCK, M12,ZAB	1
33	61073-9500GT	ASSY, HOSE, HYD, -12, 3000, STR, 90	1
34	1273074GT	SIGHT GLASS KIT	1
35	48963GT	FITTING,ELBOW,45D,520320-12***	2
36	1261344GT	FORMING,HEAT SHLD,TURBO,TCD3.6	1
37	1251983GT	SCREW,HHF,M8-1.25X16,DIN6921,10.9,ZAB	1
38	826377GT	ASSEMBLY,OIL DRAIN VALVE KIT	1
38-	826378GT	VALVE,OIL DRAIN,DEUTZ	
38-	19273GT	CLAMP,HOSE,.75 **	
38-	1702-2400GT	HOSE-HEATER,5/8 ID-BLACK	
39	215216GT	CLAMP,HOSE,CT,SAE 262,1-3/4" TO 2-5/8"	4
40	215219GT	SLEEVE,TUBE,CAC TURBO,TCD3.6	1
41	1264765GT	PIPE,CAC INLET,TCD3.6,T4F	1
42	215217GT	COUPLING,CAC,1.75X3.5 LONG	1
43	87684GT	PUSHRETAINER FOR 3/8"THRD SCREW	2
44	824091GT	SCREW, HHF, 3/8-16 X 1.25, 8, ZAG	2
45	T114350GT	ISOLATOR,RADIATOR,PERKINS	2
46	824120GT	WASHER,FLAT,.375X1.50X.125,ZAG	2
47	1283017GT	NUT,NYLOCK,FLG,M14-2.0,DIN6926,10,ZAB	2
48	1290244GT	FORMING, RADIATOR MOUNT	1
49	824086GT	SCREW,HHF,5/16-18X1,8,ZAG	4
50	1274167GT	NUT,NYLOCK FLG,5/16-18,F,ZAG	4
51	35434GT	CLAMP,HOSE,2.00***	2

512.1 Deutz TCD3.6, 74HP T4F Engine, View 3

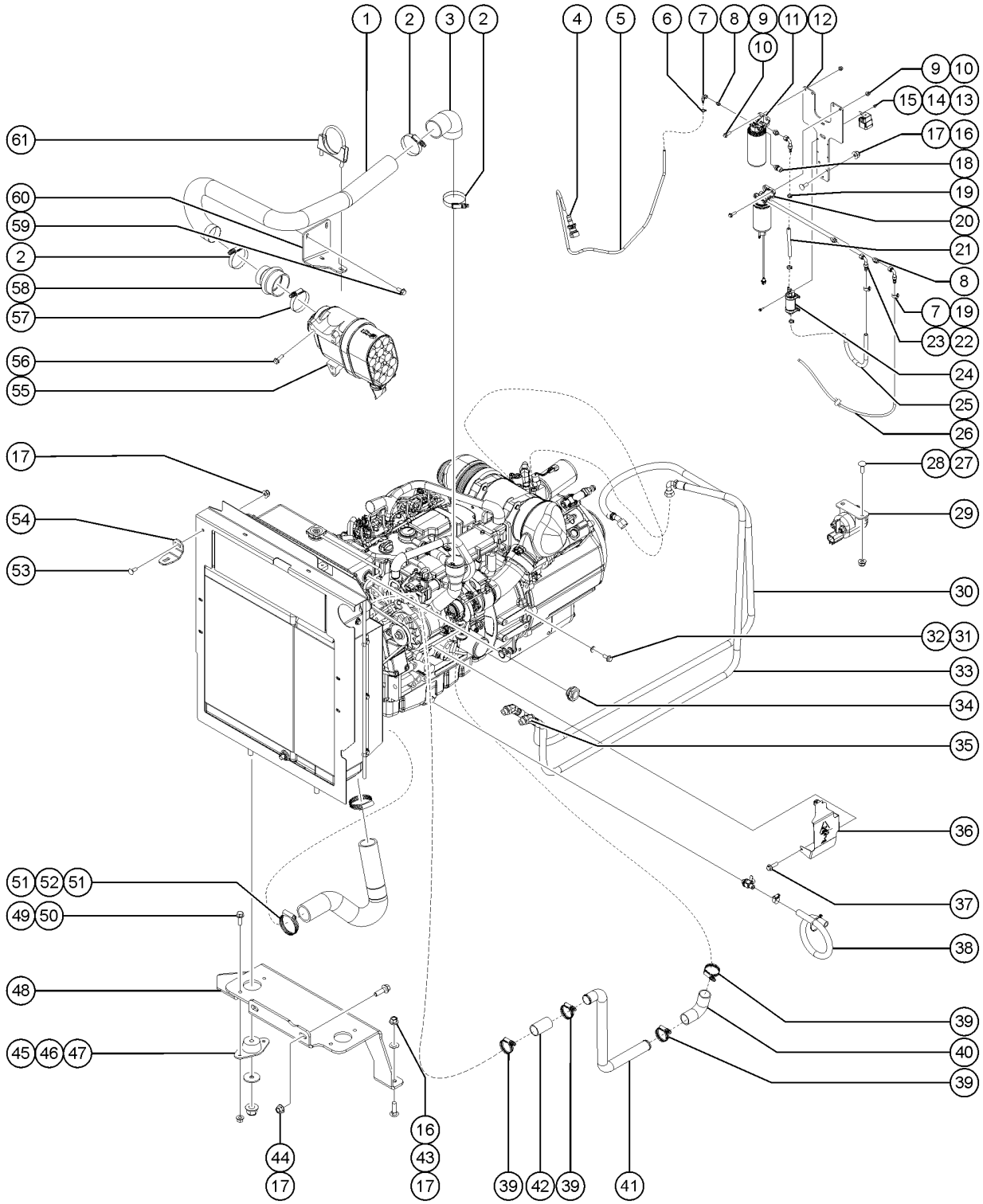

512.1 Deutz TCD3.6, 74HP T4F Engine, View 3

Item	Part No.	Description	Qty.
52	1264767GT	HOSE,RAD. INLET,TCD3.6,T4F	1
53	824125GT	BOLT, CARRIAGE, 3/8-16 X 1, 5, ZAG	1
54	1279230GT	FORMING, SUPPORT, BRACKET, SLOTTED,GTH844D	1
55	824991GT	ASSY, AIR FILTER, COMPLETE M+H IQORON V7	1
55-	1256219GT	FILTER,MAIN,M+H IQORON V7	
55-	1256220GT	FILTER,SECONDARY,M+H IQORON V7	
56	824133GT	SCREW,HHF,M8-1.25X25,DIN6921,10.9,ZAB	3
57	1261461GT	CLAMP,HOSE,CT,SAE 412,3-1/4" TO 4-1/8"	1
58	825560GT	REDUCER,HUMP HOSE,3.5"-2.75"	1
59	824132GT	SCREW,HHF,M8-1.25X20,DIN6921,10.9,ZAB	2
60	1258436GT	FORMING,PIPE,INLET,TCD3.6,T4F	1
61	1264286GT	CLAMP,MUFFLER,2.75 I.D.,FLAT	1

513.1 Deutz TCD3.6, 74HP T4F Engine, View 4

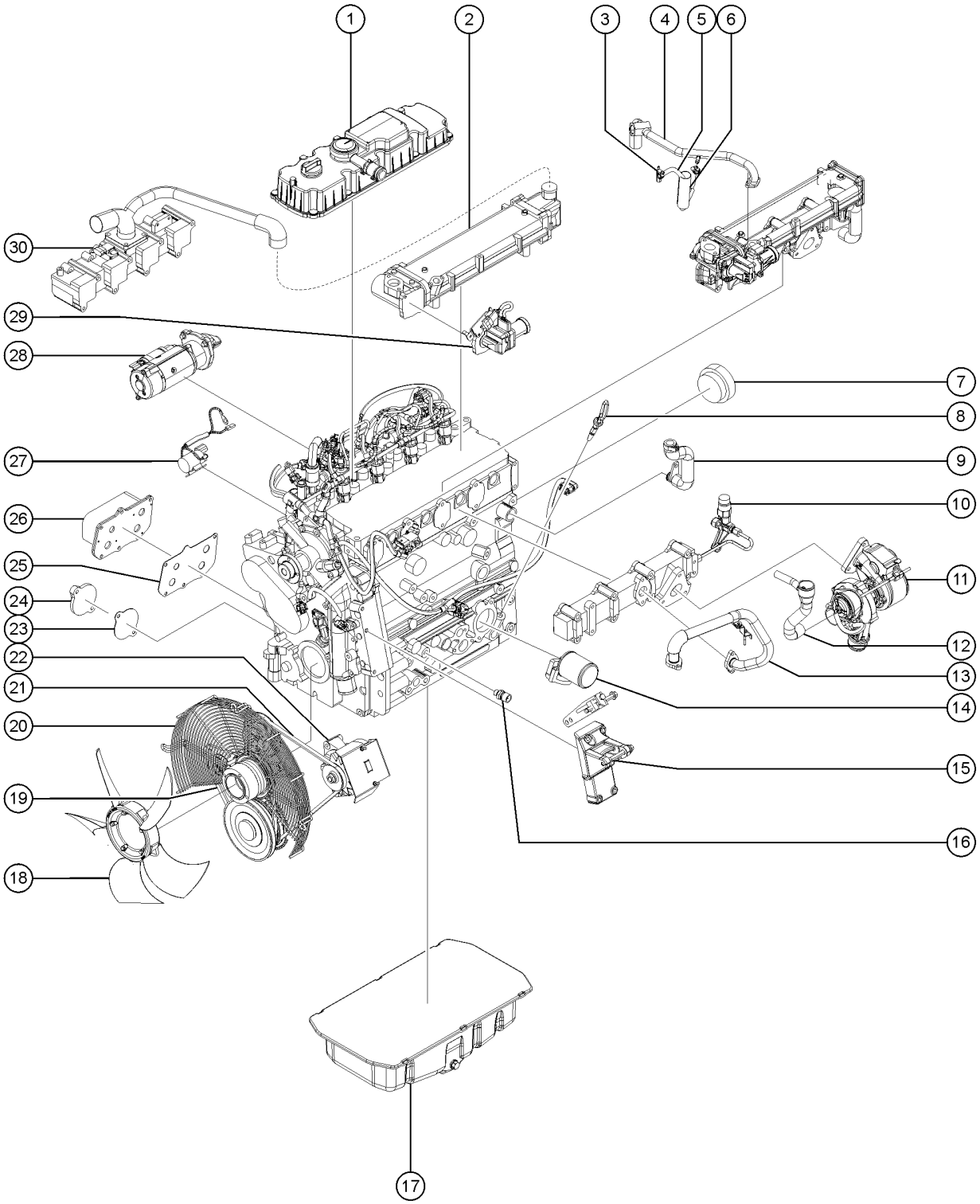

513.1 Deutz TCD3.6, 74HP T4F Engine, View 4

Item	Part No.	Description	Qty.
1	236246GT	VALVE COVER,DEUTZ TCD3.6	1
1-	1257350GT	GLOW PLUG,TCD 3.6,T4F	4
1-	1257352GT	CAP,OIL FILLER,TCD 3.6,T4F	1
2	1257329GT	MODULE,EGR,TCD3.6 T4F	1
3	21465GT	CLAMP,HOSE,.25" - .63" X .3125	2
4	1257635GT	HOSE,COOLANT,EGR,TCD3.6 T4F	1
5	1279744GT	HOSE,COOLANT,5/16" DIA,12"	1
6	1283445GT	WRAP,FIBERGLASS,HEAT RESISTANT,4"	1
7	1257360GT	CRANKSHAFT,TCD 3.6,T4F	1
8	1257328GT	DIPSTICK,TCD3.6 T4F	1
9	1257327GT	PIPE,MAN,EXHAUST,TCD3.6 T4F	
10	236258GT	TURBOCHARGER,DEUTZ TCD3.6	1
11	1257339GT	INLET,TURBO,TCD 3.6,T4	1
12	1257637GT	INLET,TURBO,TCD 3.6,T4	1
13	49924GT	FILTER,OIL,DEUTZ F4L1011F	1
14	236256GT	FILTER,OIL,DEUTZ F4L1011F	1
15	824673GT	SENSOR,LOW PRESSURE,DEUTZ 2.9L	1
16	236243GT	OIL PAN, DEUTZ TCD3.6	
17	236269GT	FAN,RADIATOR,DEUTZ TCD3.6	1
18	236245GT	FAN,RADIATOR,DEUTZ TCD3.6	1
18-	824763GT	PULLEY,FAN SUPPORT,DEUTZ TCD3.6,T3	
18-	1257318GT	BELT,DRIVE,TCD 3.6,T4F	
19	236244GT	PULLEY,OUTER,CRANKSHAFT,DEUTZ TCD3.6	1
19-	1257362GT	FAN GUARD,TCD3.6 T4F	
20	236248GT	PULLEY ASSEMBLY,ALTERNATOR,TCD	
21	1279425GT	V-BELT,ALTERNATOR,DEUTZ,10K,T3	1
21-	236251GT	ALTERNATOR,95 AMP,DEUTZ TCD3.6	
22	1263497GT	FORMING.GUARD,ALT,TCD3.6	1

513.1 Deutz TCD3.6, 74HP T4F Engine, View 4

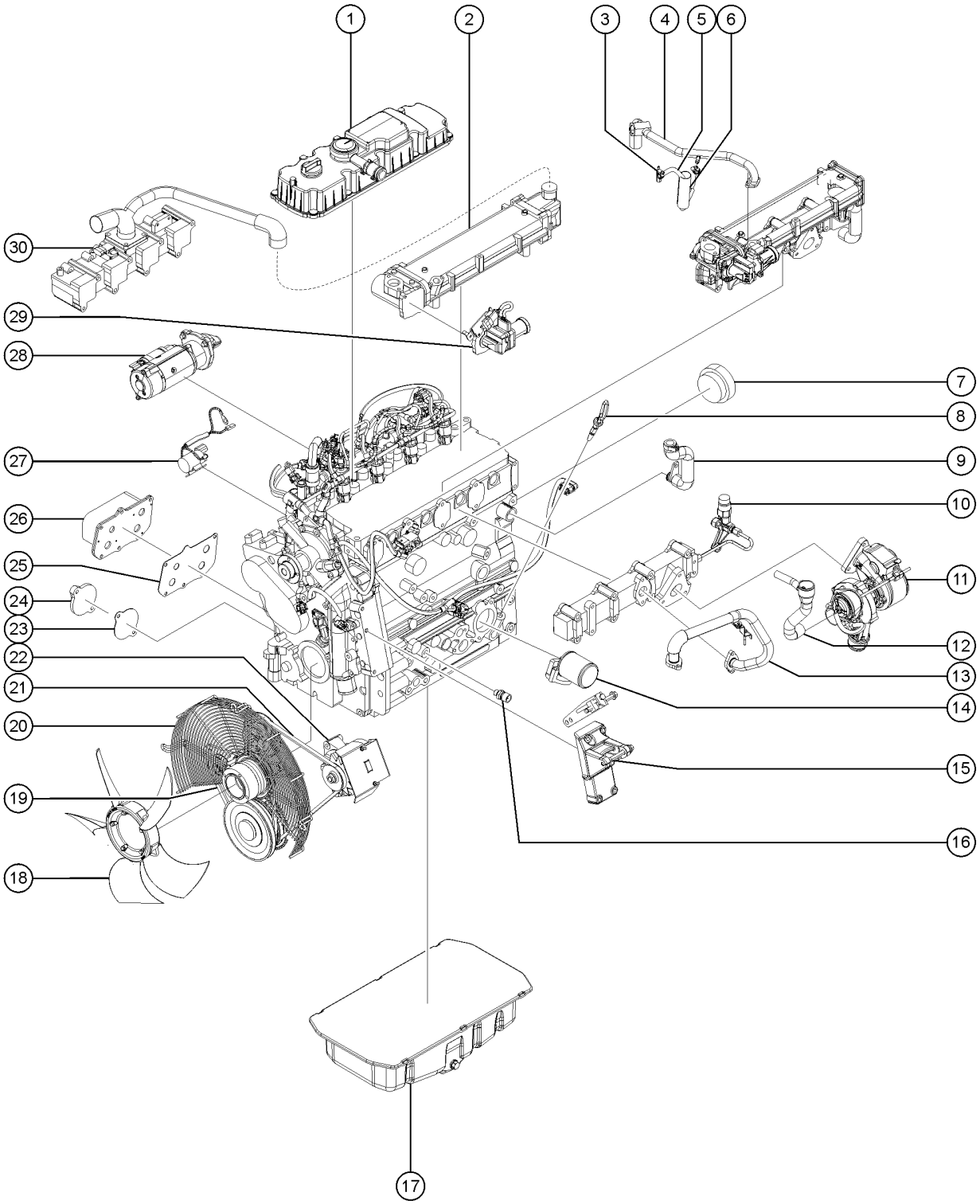

513.1 Deutz TCD3.6, 74HP T4F Engine, View 4

Item	Part No.	Description	Qty.
22-	1263973GT	FORMING.GUARD,ALT,TCD3.6	1
22-	1253185GT	WASHER,FLAT,#10,USS,ZAG	
22-	1264484GT	WASHER,FLAT,#10,USS,ZAG	
22-	1263498GT	CAP, THREAD, 10-32	
22-	218457GT	SCREW,HHF,M5X12,DIN6921,10.9,Z	
22-	1278738GT	O-RING,OIL FILL COVER,TCD 3.6	
23	29557GT	CAP,OIL FILLER,DEUTZ,DIESEL***	1
24	1257358GT	GASKET,COOLER,OIL,TCD 3.6,T4F	1
25	1260357GT	OIL COOLER,TD2.9	1
26	1257343GT	RELAY,STARTER,TCD 3.6,T4F	1
27	1257334GT	STARTER,TCD 3.6,T4F	1
28	1257342GT	STARTER,TCD 3.6,T4F	1
29	1278206GT	SENSOR,FUEL,HIGH PRESSURE,DEUTZ TD 2.9-3.6	1
29-	1278206GT	SENSOR,FUEL,HIGH PRESSURE,DEUTZ TD 2.9-3.6	
30	236252GT	MANIFOLD,INTAKE,DEUTZ TCD3.6	1

514.1 Deutz TCD3.6, 74HP T4F DANA Engine, View 1

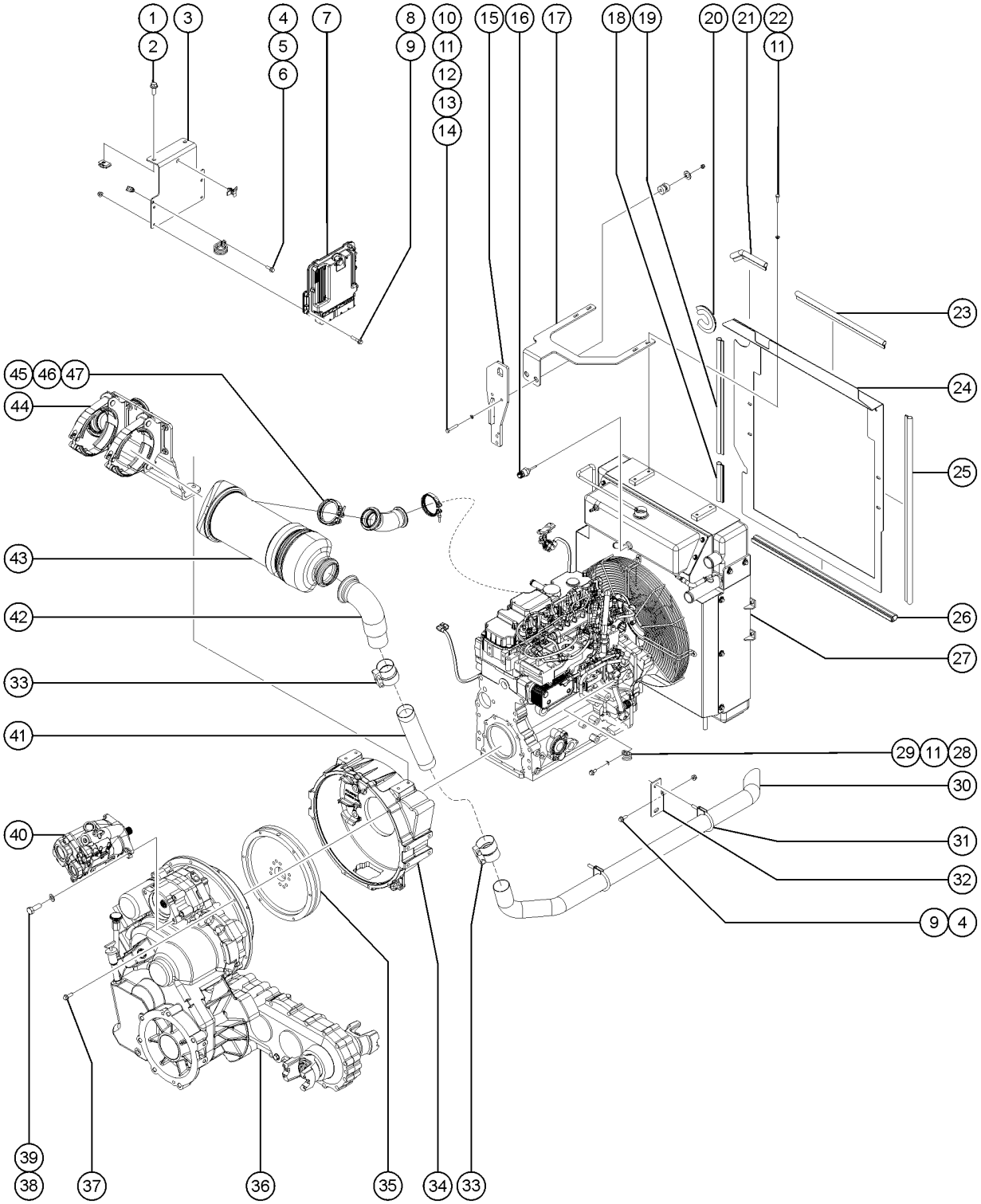

514.1 Deutz TCD3.6, 74HP T4F DANA Engine, View 1

Item	Part No.	Description	Qty.
1	824090GT	SCREW,HHF,3/8-16X1,8,ZAG	2
2	29868GT	SPRING CLIP,3/8-16,.05-.20X.73,ZAG	2
3	1296651GT	FORMING, DEUTZ ECU, GTH1056	1
4	824078GT	SCREW,HHF,1/4-20X.75,8,ZAG	4
5	33784GT	CLAMP,1.31,#21 X 1/4,RUB CUSH	2
6	56912GT	SPRING CLIP,1/4-20,.025-.15X.54,ZAG	2
7	1267794GT	ECM, DEUTZ TCD3.6L, 74HP, T4F	1
8	824079GT	SCREW,HHF,1/4-20X1,8,ZAG	4
9	1277924GT	NUT,NYLOCK FLG,1/4-20,F,ZAG	6
10	67349GT	SCREW,HHC,M8 X 50	2
11	824144GT	WASHER,FLAT,M8,DIN125,ZAB	7
12	236334GT	ISOLATOR,UP RADIATOR SUPPORT	2
13	823059GT	WASHER,SNUBBING,M8	2
14	25368GT	NUT,NYLOCK,M8X1.25	2
15	1279663GT	WELDMENT, ENGINE LIFT,TCD3.6	1
16	218715GT	COOLNT LEVL SENSR, DEUTZTCD3.6	1
17	1279662GT	WELDMENT,RAD MOUNT,TCD3.6	1
18	119219-675GT	TRIM,EDGE,1/8X3/4 END BULB	1
19	119219-2075GT	TRIM,EDGE,1/8X3/4 END BULB	1
20	119219-800GT	TRIM,EDGE,1/8X3/4 END BULB	1
21	119219-750GT	TRIM,EDGE,1/8X3/4 END BULB	1
22	824136GT	SCREW, HHC, M8-1.25 X 25, DIN933, 10.9, ZAB	4
23	119219-1863GT	TRIM,EDGE,1/8X3/4 END BULB	1
24	1296554GT	FORMING,BAFFLE,COOLER,GTH1056	1
25	119219-3400GT	TRIM,EDGE,1/8X3/4 END BULB	1
26	60875-2963GT	TRIM, RUBBER "D" SEAL, 3/16	1
27	1257361GT	RADIATOR,TCD3.6 T4F	1
28	49863GT	CLAMP,1.13,#18 X 3/8,RUB CUSH*	1

514.1 Deutz TCD3.6, 74HP T4F DANA Engine, View 1

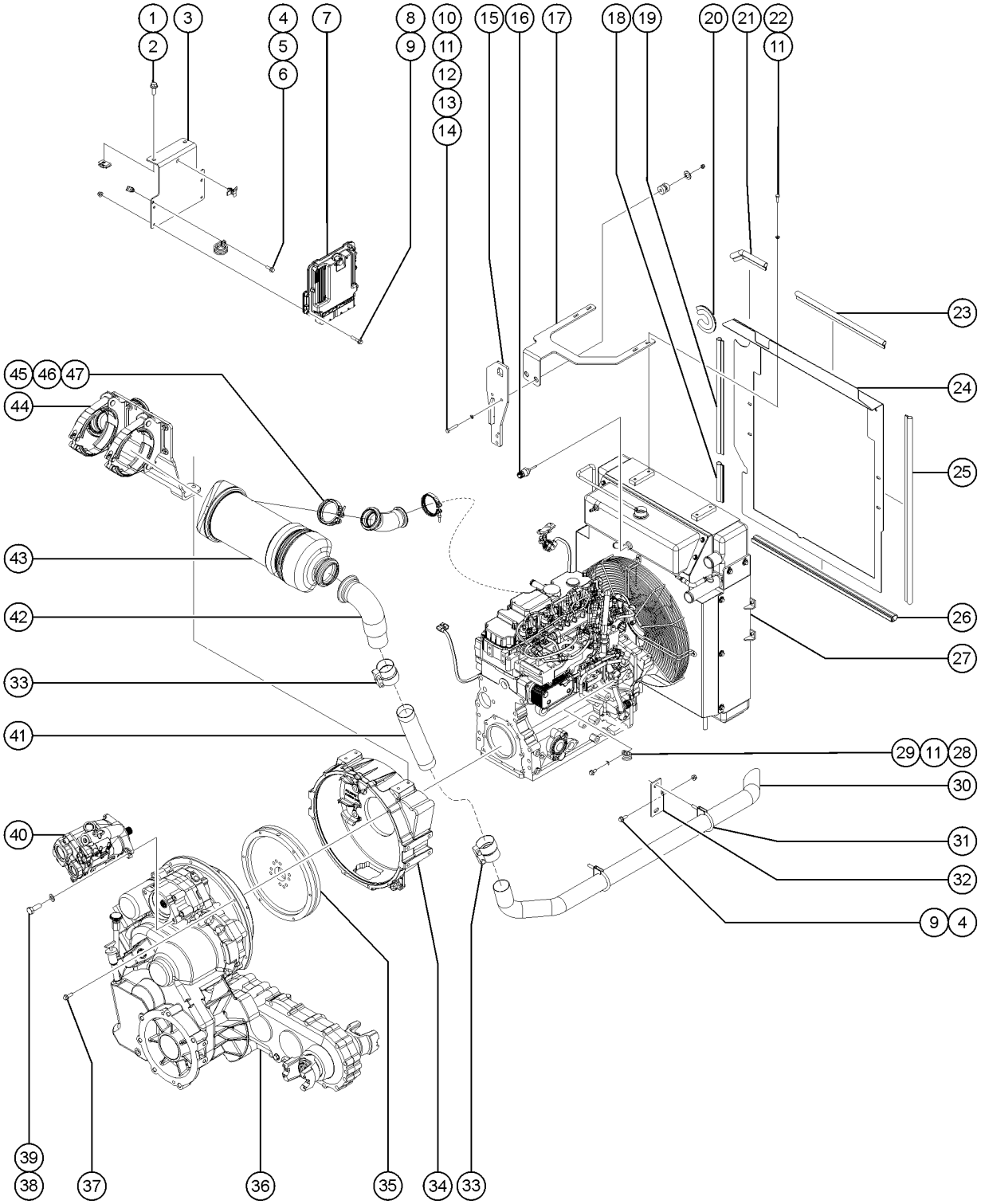

514.1 Deutz TCD3.6, 74HP T4F DANA Engine, View 1

Item	Part No.	Description	Qty.
29	824132GT	SCREW,HHF,M8-1.25X20,DIN6921,10.9,ZAB	1
30	228578GT	TUBE, TAILPIPE, 2" PERKINS	1
31	71911GT	CLAMP,MUFFLER, 2.50 INCH	2
32	1290411GT	FORMING, TAILPIPE MOUNT	1
33	234962GT	CLAMP,EXHAUST,2.5"	2
34	219321GT	FLYWHL HOUSING,DTZ TCD3.6, 10K	1
35	236249GT	FLYWHEEL,DEUTZ TCD3.6	1
36		Ref. ASSY, TRANSMISSION ,DANA VDT 1104TC DEUTZ FP, 844 Refer to 206.1	1
37	232874GT	SCREW,HHF,M10-1.5X30,DIN6921,10.9,ZAB	9
38	1256843GT	SCREW,HHC,1/2-13X1.25,8,ZAG	2
39	825353GT	WASHER,FLAT,1/2,SAE,HRD,ZAG	2
40	1292741GT	EATON PN 421AK02304C, 3.80CID (62CC) 420 CODE C	1
41	1303544GT	WRAP,HEAT SHIELD,10"X12"	1
41-	234961GT	TUBE,EXHAUST,FLEX-PIPE,2.5"ID X 12"L	1
42	214354GT	PIPE,DOC OUTLET ELBOW	1
43	1286789GT	MUFFLER,DOC,DEUTZ TCD3.6 74HP/ TD2.9	1
44	236275GT	MOUNT,DOC,DEUTZ TCD3.6	1
45	824776GT	CLAMP,TURBO PIPE-DOC,DEUTZ TCD	1
46	825249GT	PIPE,DOC EXHAUST ELBOW	1
47	824775GT	CLAMP,TURBO OUTLET-TURBO PIPE	1

515.1 Deutz TCD3.6, 74HP T4F, DANA Engine, View 2

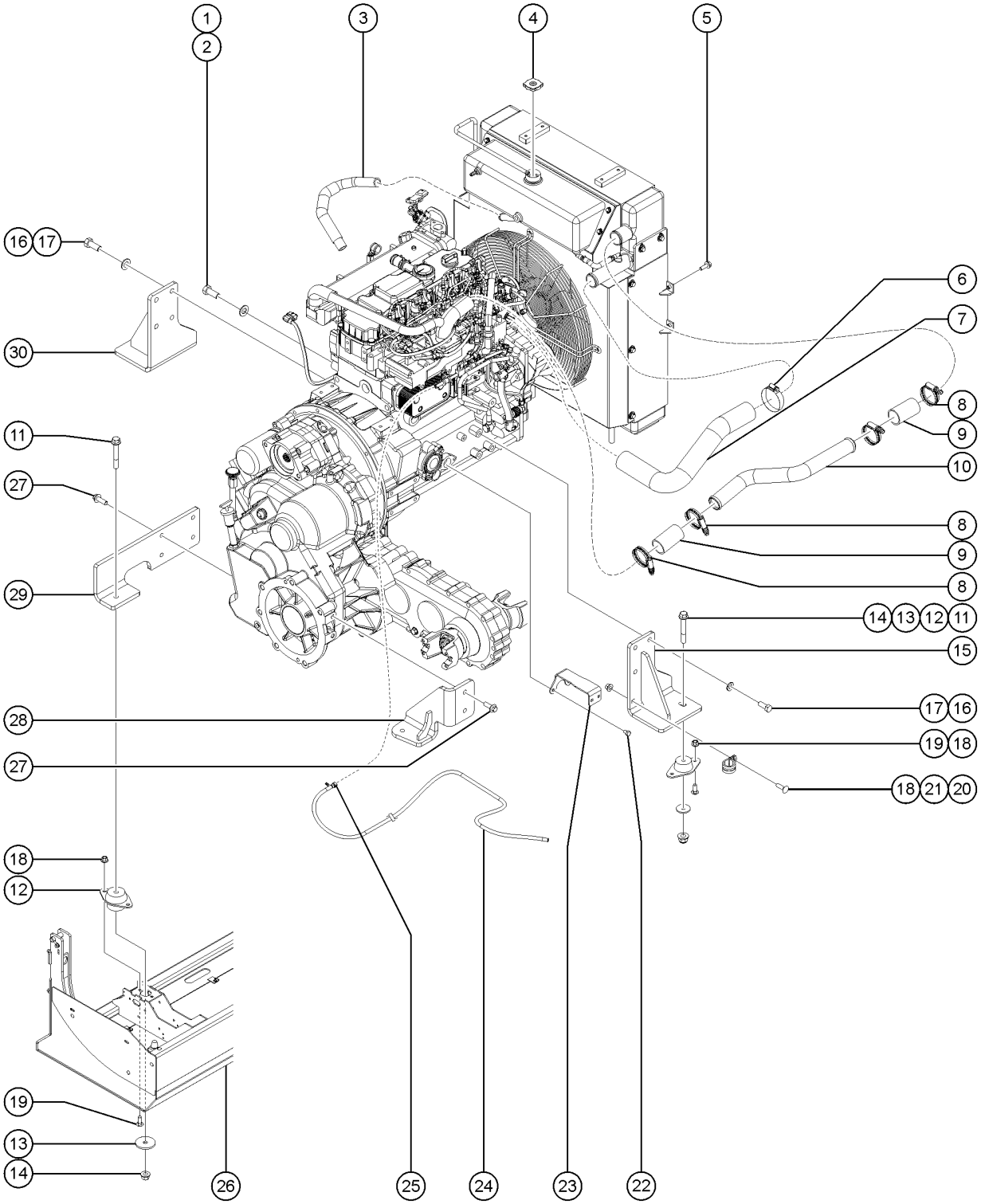

515.1 Deutz TCD3.6, 74HP T4F, DANA Engine, View 2

Item	Part No.	Description	Qty.
1	1258505GT	SCREW,HHC,M12-1.75X20,DIN933,10.9,ZAB	1
2	1256286GT	WASHER,LOCK, M12,ZAB	1
3	1257363GT	HOSE,COMP,TCD3.6,T4F	1
4	1279661GT	CAP,RADIATOR,TCD3.6	1
5	824133GT	SCREW,HHF,M8-1.25X25,DIN6921,10.9,ZAB	4
6	35434GT	CLAMP,HOSE,2.00***	1
7	1264768GT	HOSE,RAD. OULET,TCD3.6,T4F	1
8	215216GT	CLAMP,HOSE,CT,SAE 262,1-3/4" TO 2-5/8"	4
9	215217GT	COUPLING,CAC,1.75X3.5 LONG	3
10	236274GT	PIPE,CAC OUTLET,DEUTZ TCD3.6	1
11	1256851GT	SCREW,HHF,1/2-13X3.5,8,ZAG	4
12	822621GT	ISOLATOR,ENGINE,570LB MAX	4
13	1256283GT	WASHER,FLAT,.5X2.25X.188,ZAG	4
14	1274172GT	NUT,NYLOCK FLG,1/2-13,G,ZAG	4
15	1290278GT	WELDMENT, MOTOR MOUNT, INBOARD	1
16	49381GT	SCREW,HHC,M12 X 30	8
17	49410GT	WASHER, FLAT, M12	8
18	1274322GT	NUT,NYLOCK FLG,3/8-16,F,ZAG	8
19	824125GT	BOLT, CARRIAGE, 3/8-16 X 1, 5, ZAG	1
20	1255757GT	BOLT,CARRIAGE,3/8-16X1.25,5,ZAG	6
21	1269035GT	CLAMP,1.13,#18 X 1/2,RUB CUSH	1
22	1257704GT	SCREW,HHC,M8-1.25X12,DIN933,10.9,ZAB	2
23	1291436GT	FORMING,BAT CABLE MNT,10K DTZ	1
24	1293925GT	HOSE,FUEL,RETURN,TCD3.6,T4F,10K	1
25	1280083GT	QUICK CONNECT,FUEL,90 DEG,10MM	1
26		Ref. ASSEMBLY,ENGINE TRAY,10K Refer to 203.1	1
27	231511GT	SCREW,HHF,M12-1.75X35,DIN6921,10.9,ZAB	6
28	1304969GT	WELDMENT, VDT MOUNT, INBOARD	1

515.1 Deutz TCD3.6, 74HP T4F, DANA Engine, View 2

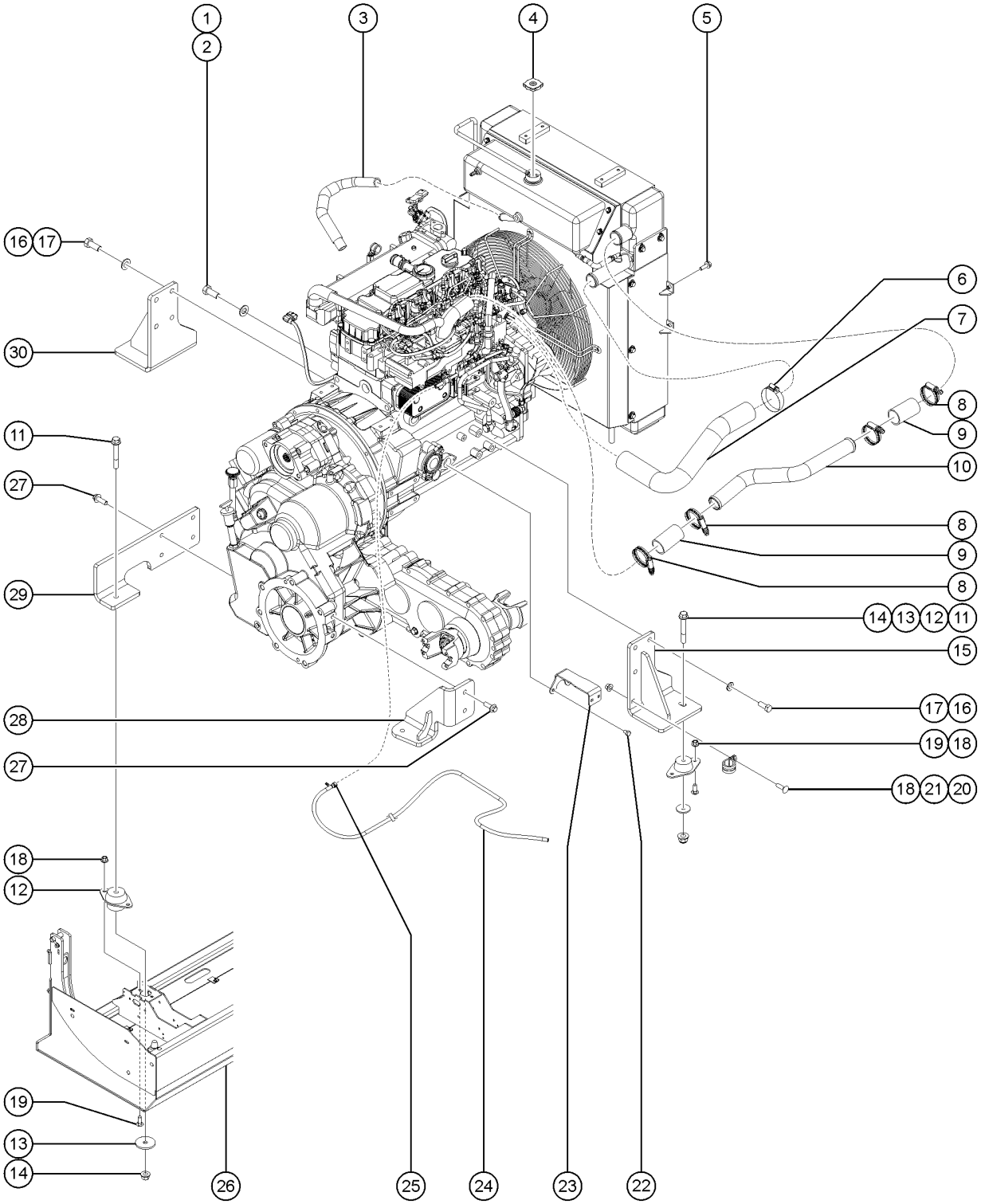

515.1 Deutz TCD3.6, 74HP T4F, DANA Engine, View 2

Item	*Part No.*	*Description*	*Qty.*
29	1304971GT	FORMING, VDT MOUNT, OUTBOARD	1
30	1290277GT	WELDMENT, MOTOR MOUNT,OUTBOARD	1

516.1 Deutz TCD3.6, 74HP T4F, DANA Engine, View 3

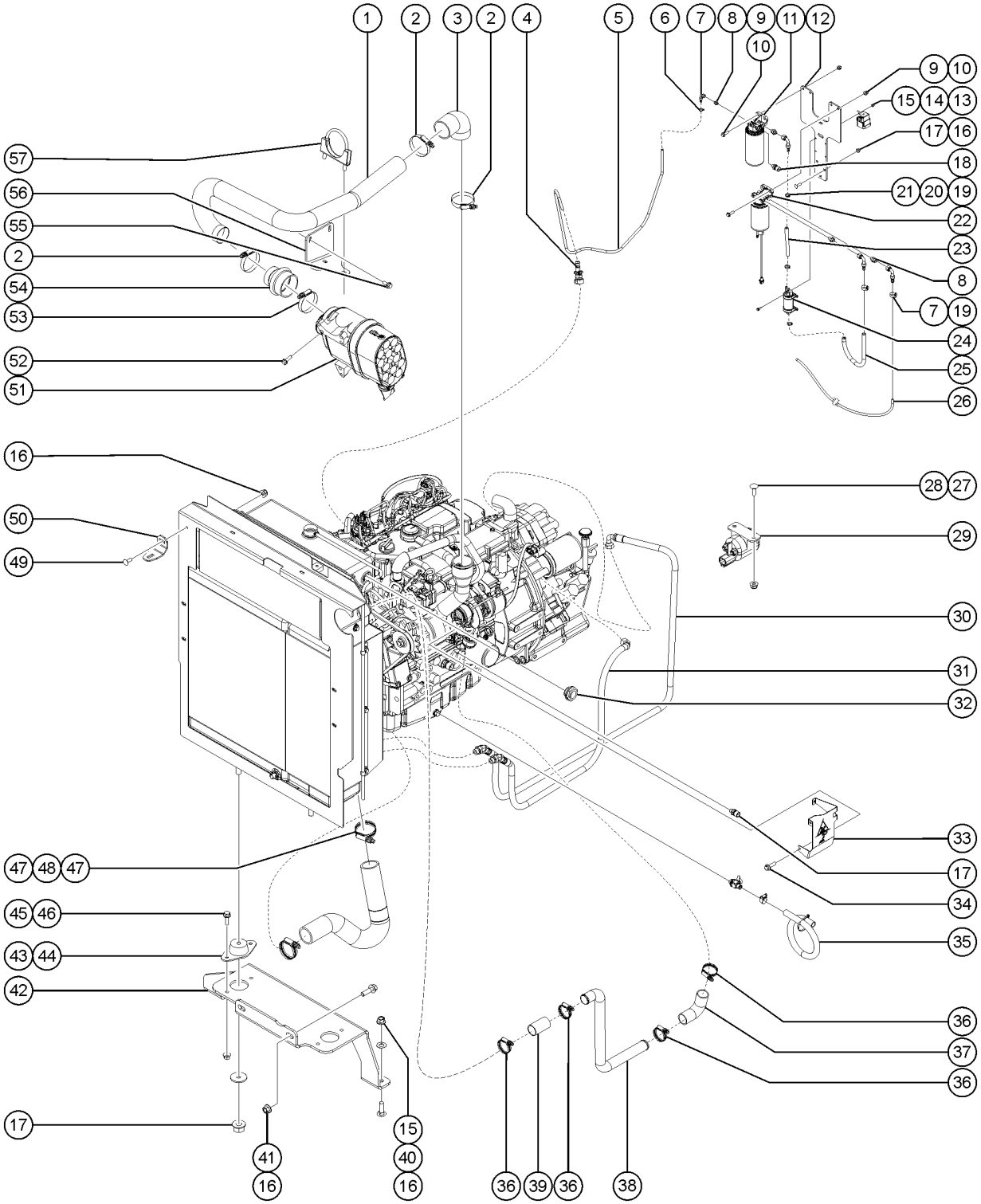

516.1 Deutz TCD3.6, 74HP T4F, DANA Engine, View 3

Item	Part No.	Description	Qty.
1	1264664GT	PIPE,INLET,TCD3.6,T4F,74HP 8K	1
2	1261460GT	CLAMP,HOSE,CT,SAE 48,2-9/16"	3
3	1257434GT	HOSE,ELBOW,RBR,2.75IS,3.13OD	1
4	1280082GT	QUICK CONNECT,FUEL,STRT,12MM	1
5	823421GT	HOSE,FUEL,1/2,GATES RLA QUANTITY OF 96 INCHES	1
6	46131GT	CLAMP,HOSE,.63" - 1.0" X .5"	2
7	1253641GT	ELBOW,90DEG,1/2" HOSE BARB	2
8	162209GT	FITTING,CONN,16MM-8MJ	2
9	231533GT	SCREW,HHF,M10-1.5X35,DIN6921,10.9,ZAB	4
10	1283015GT	NUT,NYLOCK FLG,M10-1.5,DIN6926,10,ZAB	4
11	236266GT	FILTER,FUEL,DEUTZ TCD3.6	1
12	1295726GT	PLATE,FUEL FILTER BRACKET,3.6L	1
13	1283020GT	NUT,NYLOCK,M5-0.8,DIN985,10,ZAB	4
14	60521GT	RELAY,SEALED 30/40 AMP	1
15	218458GT	SCREW,HHF,M5-0.8X20,DIN6921,10.9,ZAB	4
16	1255757GT	BOLT,CARRIAGE,3/8-16X1.25,5,ZAG	5
17	1274322GT	NUT,NYLOCK FLG,3/8-16,F,ZAG	9
18	824673GT	SENSOR,LOW PRESSURE,DEUTZ 2.9L	2
19	44909GT	CLAMP,HOSE,.25	3
20	1253642GT	ELBOW,90DEG,3/8" HOSE BARB	2
21	162208GT	FITTING,CONN,16MM-6MJ	
22	236260GT	PRE-FILTER,FUEL,DEUTZ TCD3.6	1
23	823420-690GT	HOSE,FUEL,3/8,GATES RLA	1
24	236259GT	LIFT PUMP,FUEL,DEUTZ TCD3.6	1
25	823421GT	HOSE,FUEL,1/2,GATES RLA indicate length while ordering	1
26	1293924GT	HOSE,FUEL,SUPPLY,TCD3.6,T4F,10K	1
27	824124GT	BOLT, CARRIAGE, 1/4-20 X .75, 5, ZAG	2
28	1277924GT	NUT,NYLOCK FLG,1/4-20,F,ZAG	2

516.1 Deutz TCD3.6, 74HP T4F, DANA Engine, View 3

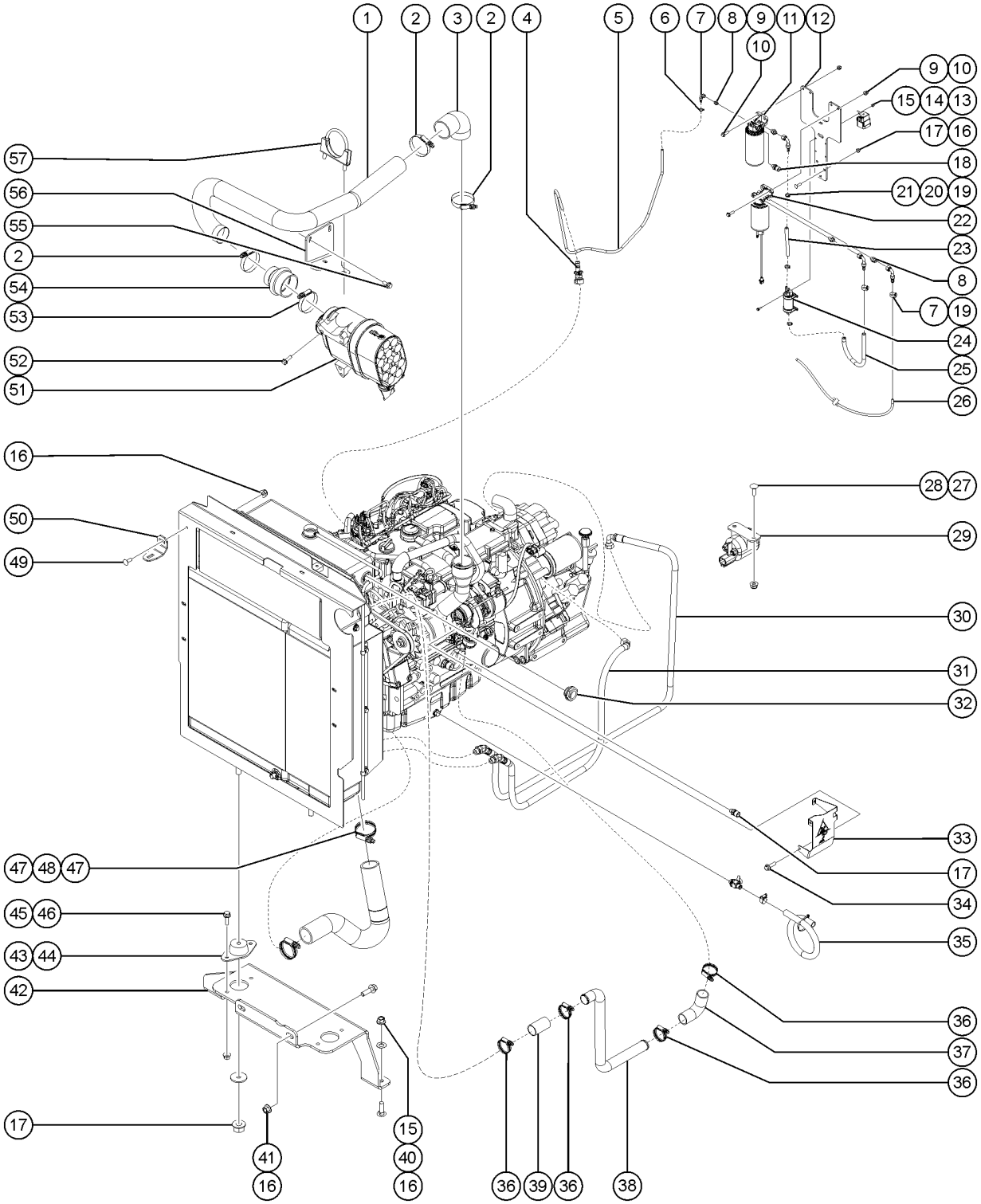

516.1 Deutz TCD3.6, 74HP T4F, DANA Engine, View 3

Item	Part No.	Description	Qty.
29	1254352GT	RELAY, SPST, 12V, 100A, SEALED	1
30	61073-9500GT	ASSY, HOSE, HYD, -12, 3000, STR, 90	1
30-	48762-9500GT	HOSE,3/4",HYD	
30-	48841GT	HOSE END,FEM SW,ORFS,-12-12	
30-	48846GT	HOSE END,FEMSW,90D,ORFS,-12-12	
31	61072-5400GT	ASSY, HOSE, HYD, -12, 3000, STR, 90, TRANSMISSION IO	1
31-	48762-5100GT	HOSE,3/4",HYD	
31-	48841GT	HOSE END,FEM SW,ORFS,-12-12	
31-	48845GT	HOSE END,FEMSW,45D,ORFS,-12-12	
32	1273074GT	SIGHT GLASS KIT	1
33	1300667GT	FORMING, HEAT SHLD,TURBO,TCD3.6	1
34	1251983GT	SCREW,HHF,M8-1.25X16,DIN6921,10.9,ZAB	1
35	826377GT	ASSEMBLY,OIL DRAIN VALVE KIT	1
35-	826378GT	VALVE,OIL DRAIN,DEUTZ	
35-	19273GT	CLAMP,HOSE,.75 **	
35-	1702-2400GT	HOSE-HEATER,5/8 ID-BLACK	
36	215216GT	CLAMP,HOSE,CT,SAE 262,1-3/4" TO 2-5/8"	4
37	215219GT	SLEEVE,TUBE,CAC TURBO,TCD3.6	1
38	1264765GT	PIPE,CAC INLET,TCD3.6,T4F	1
39	215217GT	COUPLING,CAC,1.75X3.5 LONG	1
40	87684GT	PUSHRETAINER FOR 3/8"THRD SCREW	2
41	824091GT	SCREW, HHF, 3/8-16 X 1.25, 8, ZAG	2
42	1290244GT	FORMING, RADIATOR MOUNT	1
43	T114350GT	ISOLATOR,RADIATOR,PERKINS	2
44	824120GT	WASHER,FLAT,.375X1.50X.125,ZAG	2
45	824086GT	SCREW,HHF,5/16-18X1,8,ZAG	4
46	1274167GT	NUT,NYLOCK FLG,5/16-18,F,ZAG	4
47	35434GT	CLAMP,HOSE,2.00***	2

516.1 Deutz TCD3.6, 74HP T4F, DANA Engine, View 3

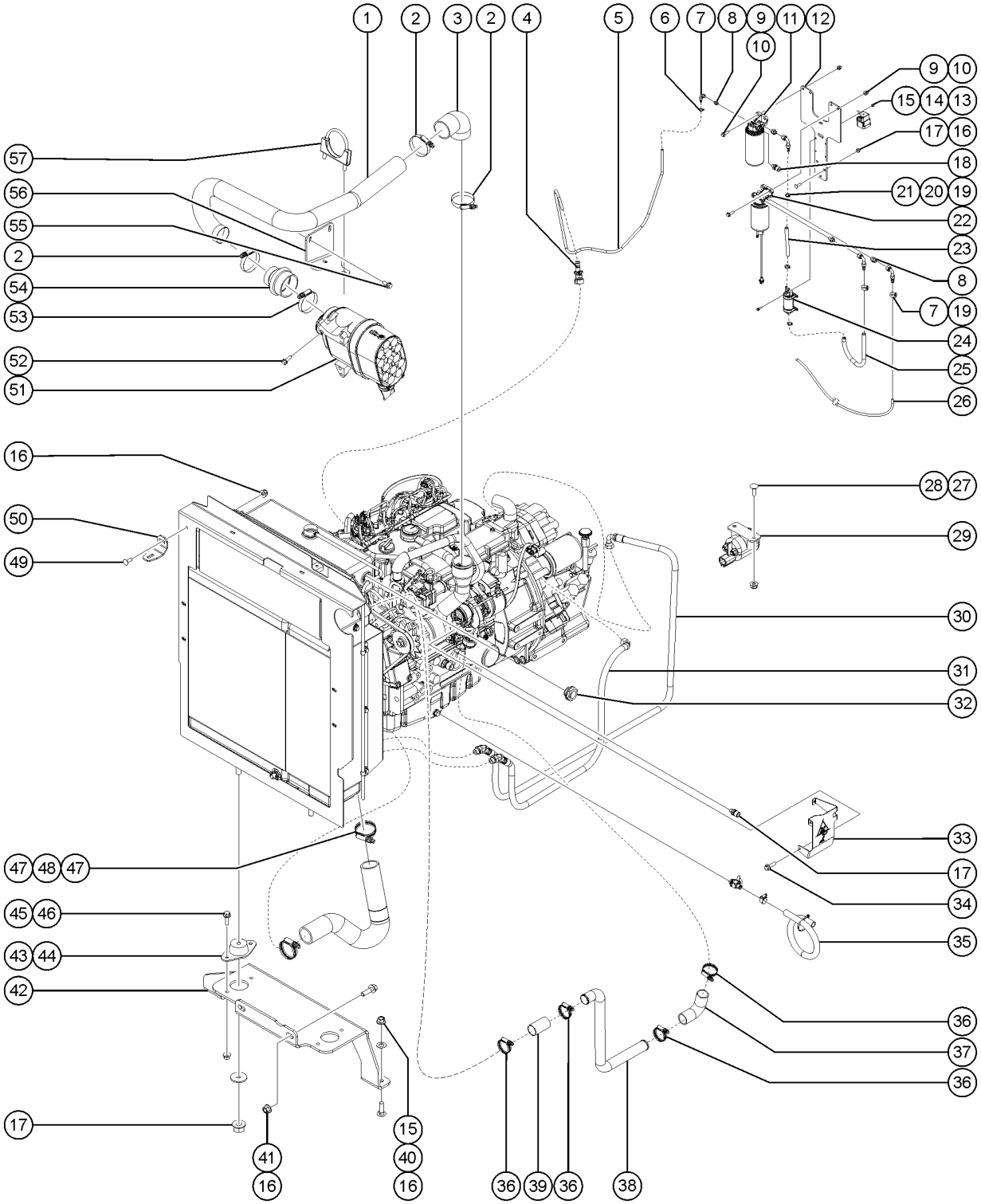

516.1 Deutz TCD3.6, 74HP T4F, DANA Engine, View 3

Item	Part No.	Description	Qty.
48	1264767GT	HOSE,RAD. INLET,TCD3.6,T4F	1
49	824125GT	BOLT, CARRIAGE, 3/8-16 X 1, 5, ZAG	1
50	1279230GT	FORMING, SUPPORT, BRACKET, SLOTTED,GTH844D	1
51	824991GT	ASSY, AIR FILTER, COMPLETE M+H IQORON V7	1
51-	1256219GT	FILTER,MAIN,M+H IQORON V7	
51-	1256220GT	FILTER,SECONDARY,M+H IQORON V7	
52	824133GT	SCREW,HHF,M8-1.25X25,DIN6921,10.9,ZAB	3
53	1261461GT	CLAMP,HOSE,CT,SAE 412,3-1/4" TO 4-1/8"	1
54	825560GT	REDUCER,HUMP HOSE,3.5"-2.75"	1
55	824132GT	SCREW,HHF,M8-1.25X20,DIN6921,10.9,ZAB	2
56	1258436GT	FORMING,PIPE,INLET,TCD3.6,T4F	1
57	1264286GT	CLAMP,MUFFLER,2.75 I.D.,FLAT	1

517.1 Deutz TCD3.6, 74HP T4F, DANA Engine, View 4

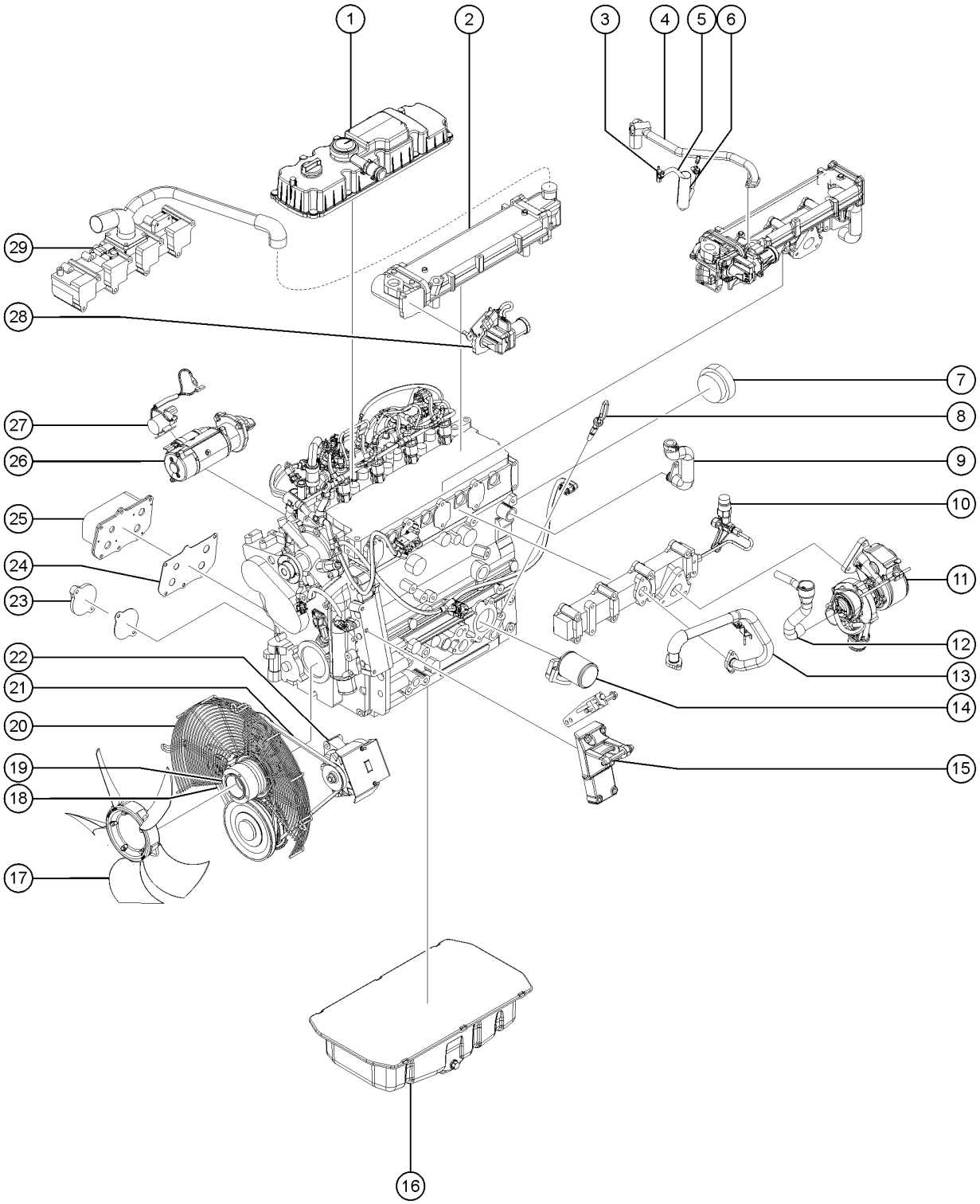

517.1 Deutz TCD3.6, 74HP T4F, DANA Engine, View 4

Item	Part No.	Description	Qty.
1	236246GT	VALVE COVER,DEUTZ TCD3.6	1
1-	1257350GT	GLOW PLUG,TCD 3.6,T4F	4
2	1257329GT	MODULE,EGR,TCD3.6 T4F	1
3	21465GT	CLAMP,HOSE,.25" - .63" X .3125	2
4	1257635GT	HOSE,COOLANT,EGR,TCD3.6 T4F	1
5	1279744GT	HOSE,COOLANT,5/16" DIA,12"	1
6	1283445GT	WRAP,FIBERGLASS,HEAT RESISTANT,4"	1
7	1257360GT	CRANKSHAFT,TCD 3.6,T4F	1
8	1257386GT	DIPSTICK,TCD3.6 T4F	1
9	1257328GT	DIPSTICK,TCD3.6 T4F	
10	1257327GT	PIPE,MAN,EXHAUST,TCD3.6 T4F	1
11	236258GT	TURBOCHARGER,DEUTZ TCD3.6	1
12	1257339GT	INLET,TURBO,TCD 3.6,T4	
13	1257637GT	INLET,TURBO,TCD 3.6,T4	1
14	49924GT	FILTER,OIL,DEUTZ F4L1011F	1
15	236256GT	FILTER,OIL,DEUTZ F4L1011F	1
16	236243GT	OIL PAN, DEUTZ TCD3.6	1
17	236269GT	FAN,RADIATOR,DEUTZ TCD3.6	1
18	1257318GT	BELT,DRIVE,TCD 3.6,T4F	1
19	236245GT	FAN,RADIATOR,DEUTZ TCD3.6	1
19-	824763GT	PULLEY,FAN SUPPORT,DEUTZ TCD3.6,T3	
19-	236248GT	PULLEY ASSEMBLY,ALTERNATOR,TCD	
20	1257362GT	FAN GUARD,TCD3.6 T4F	1
21	1279425GT	V-BELT,ALTERNATOR,DEUTZ,10K,T3	1
22	236251GT	ALTERNATOR,95 AMP,DEUTZ TCD3.6	1
22-	1263498GT	CAP, THREAD, 10-32	
22-	1263497GT	FORMING.GUARD,ALT,TCD3.6	
22-	1263973GT	FORMING.GUARD,ALT,TCD3.6	

517.1 Deutz TCD3.6, 74HP T4F, DANA Engine, View 4

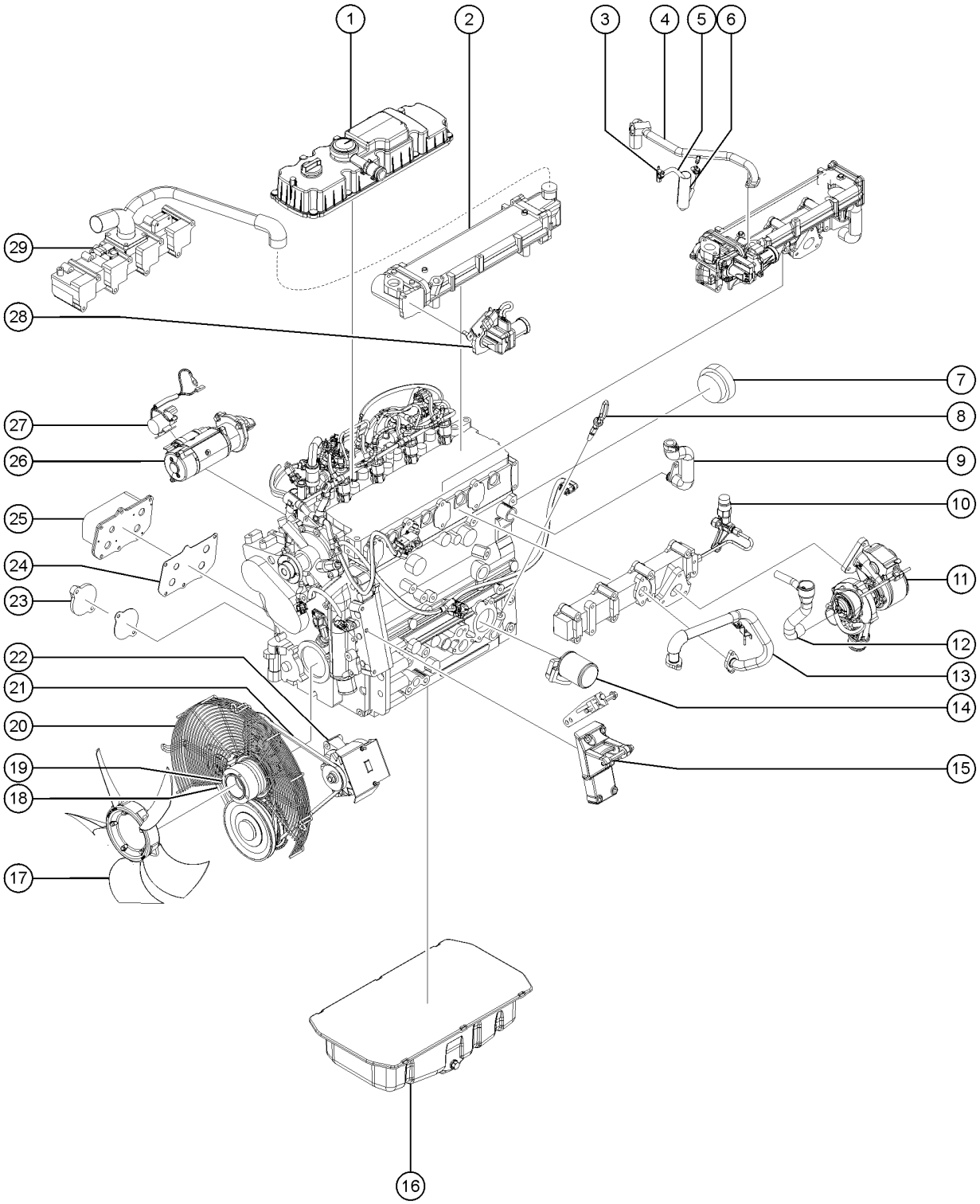

517.1 Deutz TCD3.6, 74HP T4F, DANA Engine, View 4

Item	Part No.	Description	Qty.
22-	1253185GT	WASHER,FLAT,#10,USS,ZAG	
22-	1264484GT	WASHER,FLAT,#10,USS,ZAG	
22-	236244GT	PULLEY,OUTER,CRANKSHAFT,DEUTZ TCD3.6	
23	29557GT	CAP,OIL FILLER,DEUTZ,DIESEL***	1
23-	1278738GT	O-RING,OIL FILL COVER,TCD 3.6	
24	1257358GT	GASKET,COOLER,OIL,TCD 3.6,T4F	1
25	1260357GT	OIL COOLER,TD2.9	1
26	236247GT	STARTER,4KW,DEUTZ TCD3.6	1
27	1257343GT	RELAY,STARTER,TCD 3.6,T4F	1
28	1257334GT	STARTER,TCD 3.6,T4F	1
29	236252GT	MANIFOLD,INTAKE,DEUTZ TCD3.6	1

601.1 Fork Frame, Quick Attachment

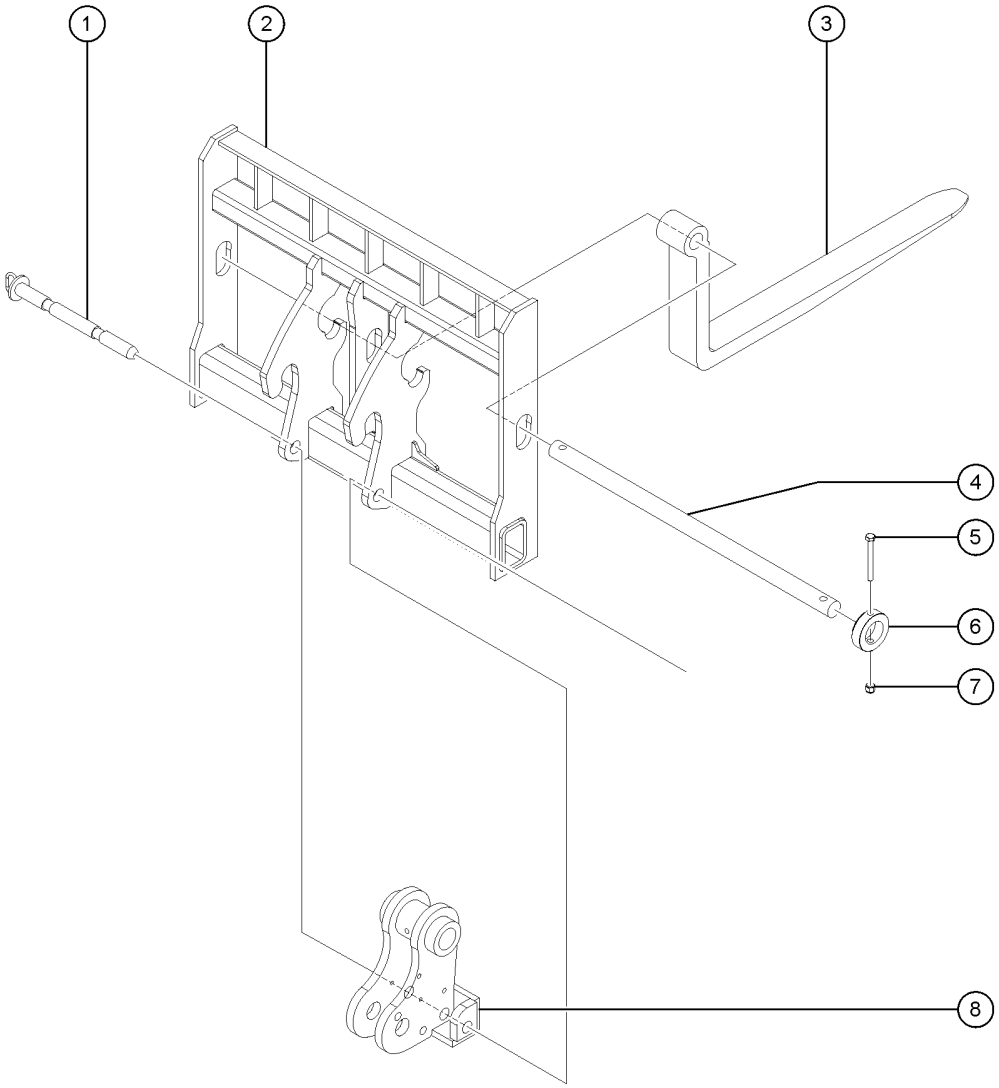

Item	Part No.	Description	Qty.
1	1254050GT	WELDMENT,LOCK PIN	1
2	1273765GT	ASSY,CRG WLDMT,LABELED,48",QA,2" PIN,BLK	1
2B	1273766GT	ASSY,CRG WLDMT,LABELED ,60",QA,2" PIN,BLK	1
2C	1273767GT	ASSY,CRG WLDMT,LABELED, 72",QA,2" PIN,BLK	1
3	1254548GT	WELDMENT,FORK TINE,48"	2
3B	1254549GT	WELDMENT,FORK TINE,60"	2
3C	1254550GT	WELDMENT,FORK TINE,72"	2
3D	1254551GT	WELDMENT,FORK TINE,48" CUBING,	6
3E	1254552GT	WELDMENT,FORK TINE,60" TAPERED	2
3F	1254553GT	WELDMENT,FORK TINE,LUMBER	2
4	141002GT	PIN,FORK,48" FORK FRAME pin measures 52 x 2.25 inches	1
4B	141003GT	PIN,FORK,60" FORK FRAME pin measures 64 x 2.25 inches	1
4C	141004GT	PIN,FORK,72" FORK FRAME pin measures 76 x 2.25 inches	1
5	1256107GT	SCREW,HHC,1/2-13X4.5,8,ZAG	2
6	1254525GT	COLLAR,FORK TINE PIN	2
7	1256106GT	NUT,TL,1/2-13,C,ZAG	4
8		Ref. WELDMENT, QUICK ATTACH, 10K Refer to 701.1	1

602.1 Fork Frame, Rotate Attachment

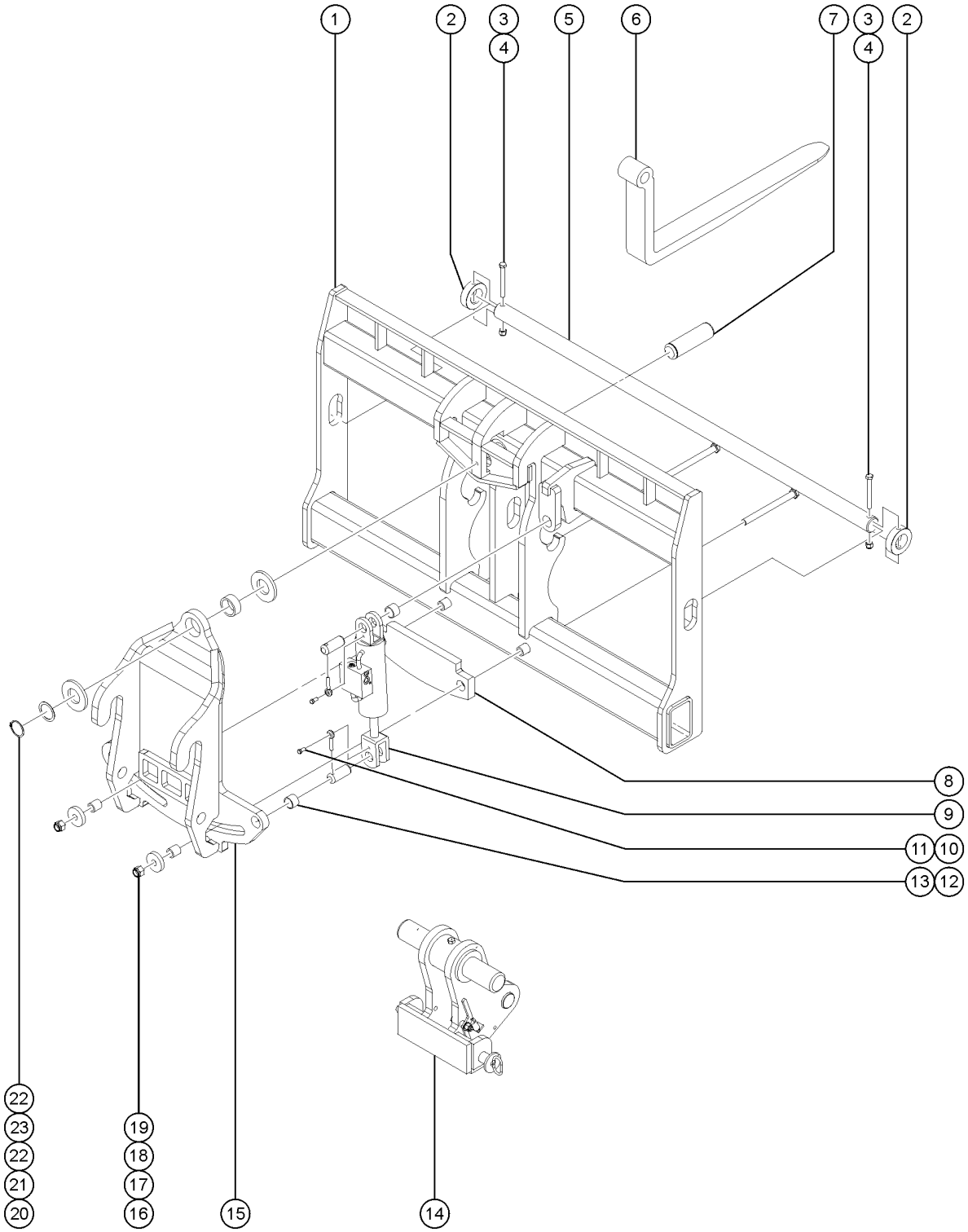

Item	Part No.	Description	Qty.
-	49130-3500GT	HOSE ASSY, 3/8, STR FEM, STR FEM	2
1	1254545GT	WELDMENT, 48" CARRAIGE, QA 10K	1
1B	1254546GT	WELDMENT,60" CARRIAGE,QA 10K	1
1C	1254547GT	WELDMENT,72" CARRIAGE,QA 10K	1
2	1254525GT	COLLAR,FORK TINE PIN	2
3	1256107GT	SCREW,HHC,1/2-13X4.5,8,ZAG	2
4	1256106GT	NUT,TL,1/2-13,C,ZAG	2
5	141002GT	PIN,FORK,48" FORK FRAME pin measures 52 x 2.25 inches	1
5B	141003GT	PIN,FORK,60" FORK FRAME pin measures 64 x 2.25 inches	1
5C	141004GT	PIN,FORK,72" FORK FRAME pin measures 76 x 2.25 inches	1
6		Ref. WELDMENT,FORK (Refer to 601.1)	
7	216570GT	PIN, 2.00 OD X 6.75 LG, 1 RING	1
8	216568GT	WEAR PAD, LOWER ROTATE	1
9	216571GT	CYLINDER, ROTATE	1
10	824089GT	SCREW, HHF, 3/8-16 X .75, 8, ZAG	2
11	1255452GT	ROD END,.375 X 2.25,ZAG	2
12	30370GT	BEARING,1.25IDX1.5ODX1.00L	2
13	216635GT	PIN,1.25DIA X 3.15LG, 1 HOLE	2
14		Ref. WELDMENT, QUICK ATTACH, 10K (Refer to 601.1)	
15	1254971GT	WELDMENT,CARRIAGE PIVOT,ROTATE	1
16	1257458GT	NUT,TL,3/4-10,C,ZAGG	2
17	1254533GT	PLATE,RETAINER 48" CARRAIGE	2
17B	215639GT	PLATE, RETAINER 60" CARRAIGE and 72" CARRAIGE	2
18	1254532GT	TUBE,SPACER 48" CARRAIGE	2
18B	215638GT	TUBE, SPACER 60" CARRAIGE and 72" CARRAIGE	2
19	1256465GT	SCREW,HHC,3/4-10X8.5,8,ZAG	2
20	1253815GT	SNAP RING,EXTERNAL,2.00,ZAG	1
21	216569GT	WASHER,HRDND,2.01X2.75X.06PLTD	1

602.1 Fork Frame, Rotate Attachment

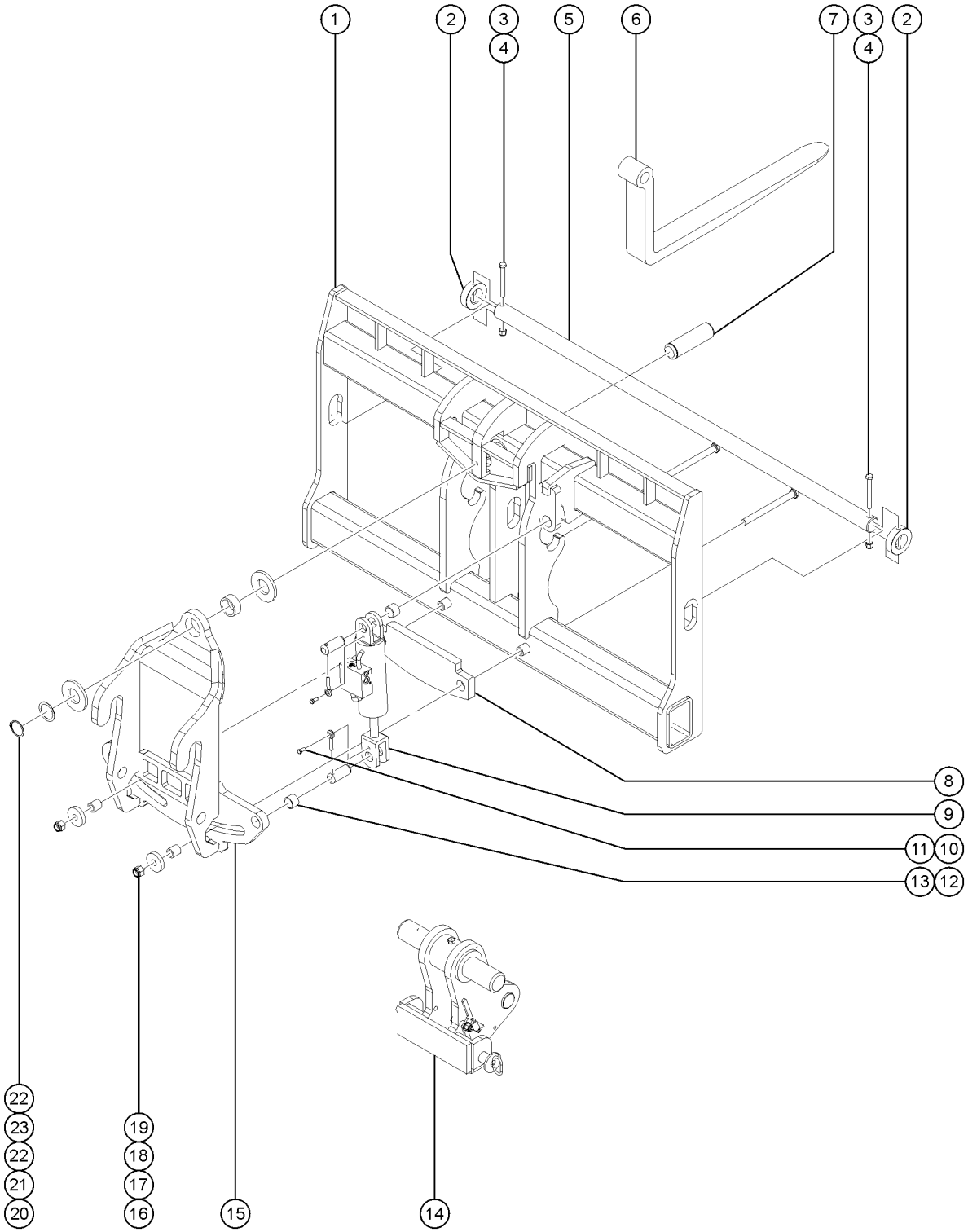

Item	*Part No.*	*Description*	*Qty.*
22	216567GT	WEAR PAD, SPACER PIVOT	2
23	T107482GT	BEARING,2.0 ID X 2.5 OD X 1.0L	1

603.1 Fork Frame, Swing Carriage Attachment

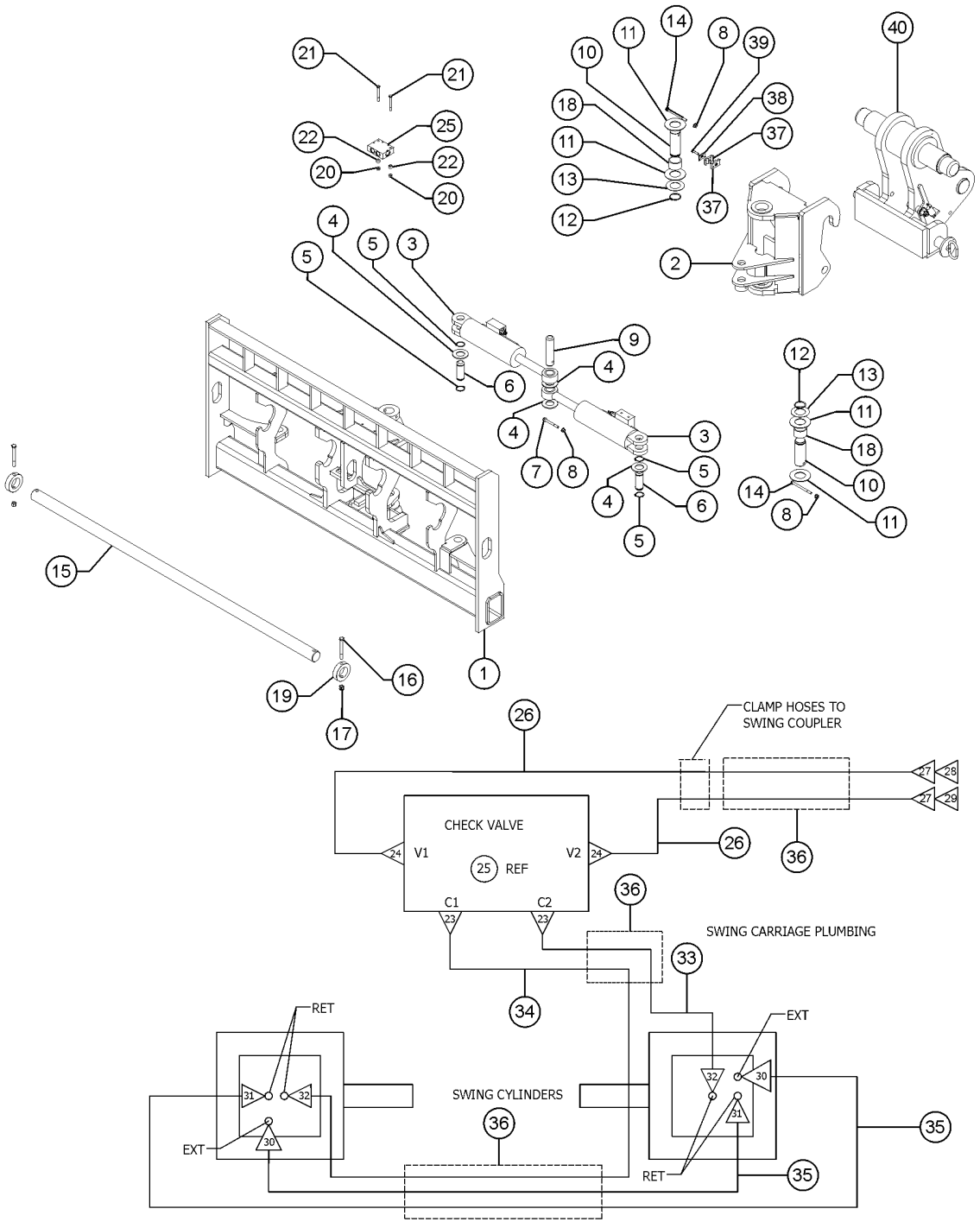

Item	Part No.	Description	Qty.
1	1253935GT	WELDMENT,72" CARRIAGE,SWING	1
2	1254405GT	WELDMENT,QA SWING COUPLER	1
3	1303934GT	CYLINDER,SWING CARRIAGE	2
3-	162342GT	CYLINDER,SWING CARRIAGE	2
4	1257899GT	WASHER,FLAT,1.5,F436,HRD,ZAG	4
5	825796GT	SNAP RING,EXTERNAL,1.50,ZAG	4
6	130353GT	PIN,1.50DIAX3.38LG,2RING	2
7	824096GT	SCREW, HHF, 3/8-16 X 3.5, 8, ZAG	1
8	824029GT	NUT, TL FLG, 3/8-16, G, ZAG	3
9	130107GT	PIN,1.50DIAX6.38LG,1HOLE	1
10	1280380GT	PIN,2.00DIA X 5.75LG,1HOLE/1RING	2
11	130319GT	WASHER,THRUST	4
12	1253815GT	SNAP RING,EXTERNAL,2.00,ZAG	2
13	1256864GT	WASHER,FLAT,2.01X3.5X.06,ZAG	2
14	1257828GT	SCREW,HHC,3/8-16X5,8,ZAG	2
15	141004GT	PIN,FORK,72" FORK FRAME pin measures 76 x 2.25 inches	1
16	1256107GT	SCREW,HHC,1/2-13X4.5,8,ZAG	2
17	1256106GT	NUT,TL,1/2-13,C,ZAG	2
18	123188GT	BEARING,2.00IDX2.50ODX1.50L	2
19	1254525GT	COLLAR,FORK TINE PIN	2
20	824028GT	NUT, TL FLG, 5/16-18, G, ZAG	2
21	1256310GT	SCREW,HHC,5/16-18X3.25,8,ZAG	2
22	44723GT	SPACER,OUTRIGGER PIN***	2
23	130352GT	FITTING,RESTRICTOR,(.0625)	2
24	48929GT	FITTING,ELBOW,90D,520220-6-8	2
25	7-234-04GT	VALVE,DUAL CHECK	1
26	49130-7200GT	HOSE ASSY,3/8,STR FEM,STR FEM	2
27	48930GT	FITTING,CONN,520120-6-8***	2

603.1 Fork Frame, Swing Carriage Attachment

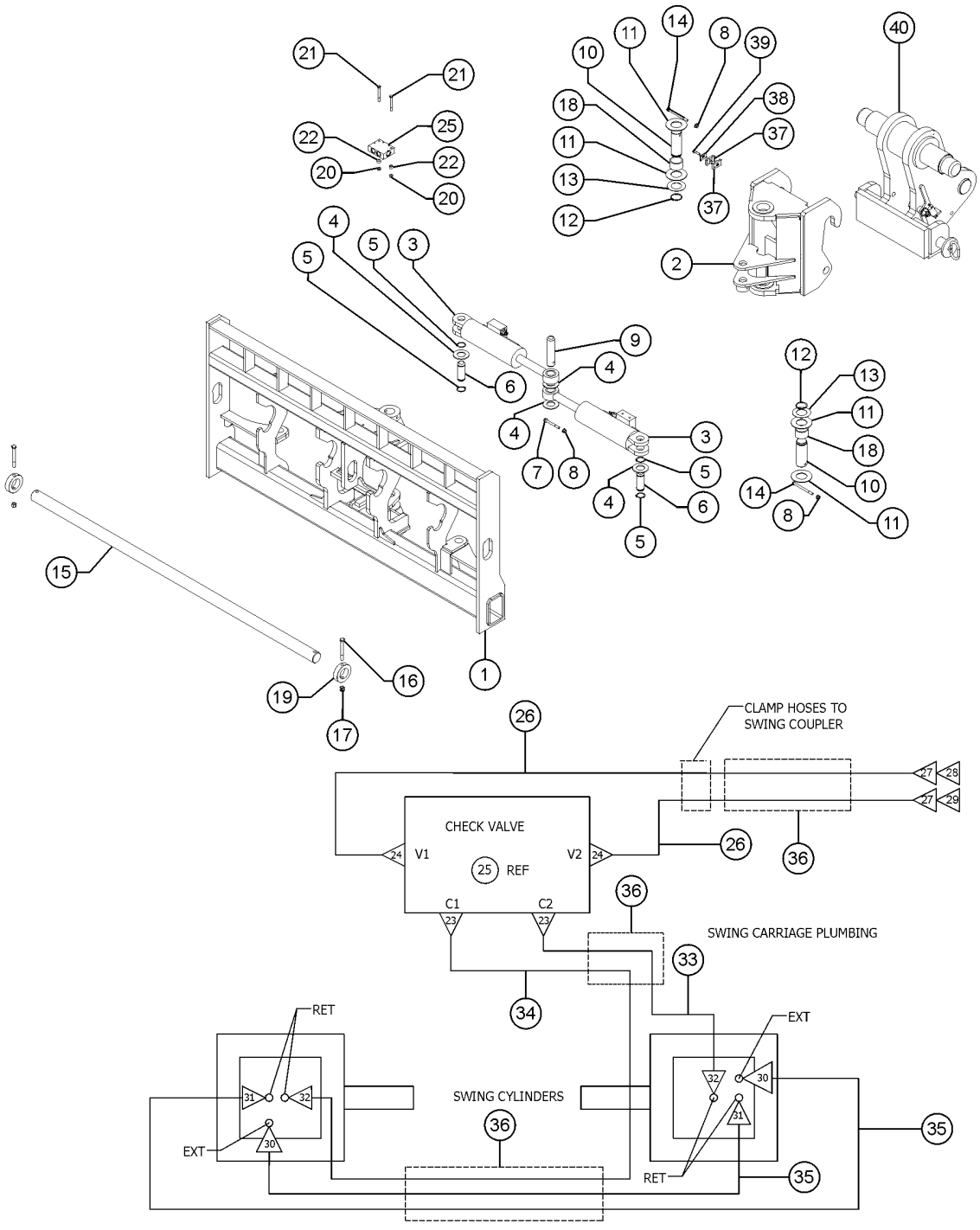

Item	Part No.	Description	Qty.
28	123180GT	QUICK COUPLING,MALE	1
29	123181GT	QUICK COUPLING,FEMALE	1
30	48904GT	ELBOW, 90D, 520220-4	2
31	48905GT	CONNECTOR, 520120-4	2
32	48926GT	FITTING,ELBOW,90D,520220-6-4	2
33	49128-2460GT	HOSE ASSY,3/8,90 FEM,STR FEM	1
34	49128-4610GT	HOSE ASSY,3/8,90 FEM,STR FEM	1
35	49117-3800GT	HOSE ASSY,1/4,90 FEM,STR FEM	2
36	123838GT	COIL,PROTECTIVE,PLASTIC	68 inches
37	7-273-27GT	CLAMP HALVES,TWIN,3/8"PIPE	2
38	123176GT	PLATE, TOP	1
39	824066GT	SCREW,HHC,5/16-18X1.375,8,ZAG	1
40		Ref. Quick attach (Refer to 601.1)	1

604.1 Fork Frame, Side Shift Attachment

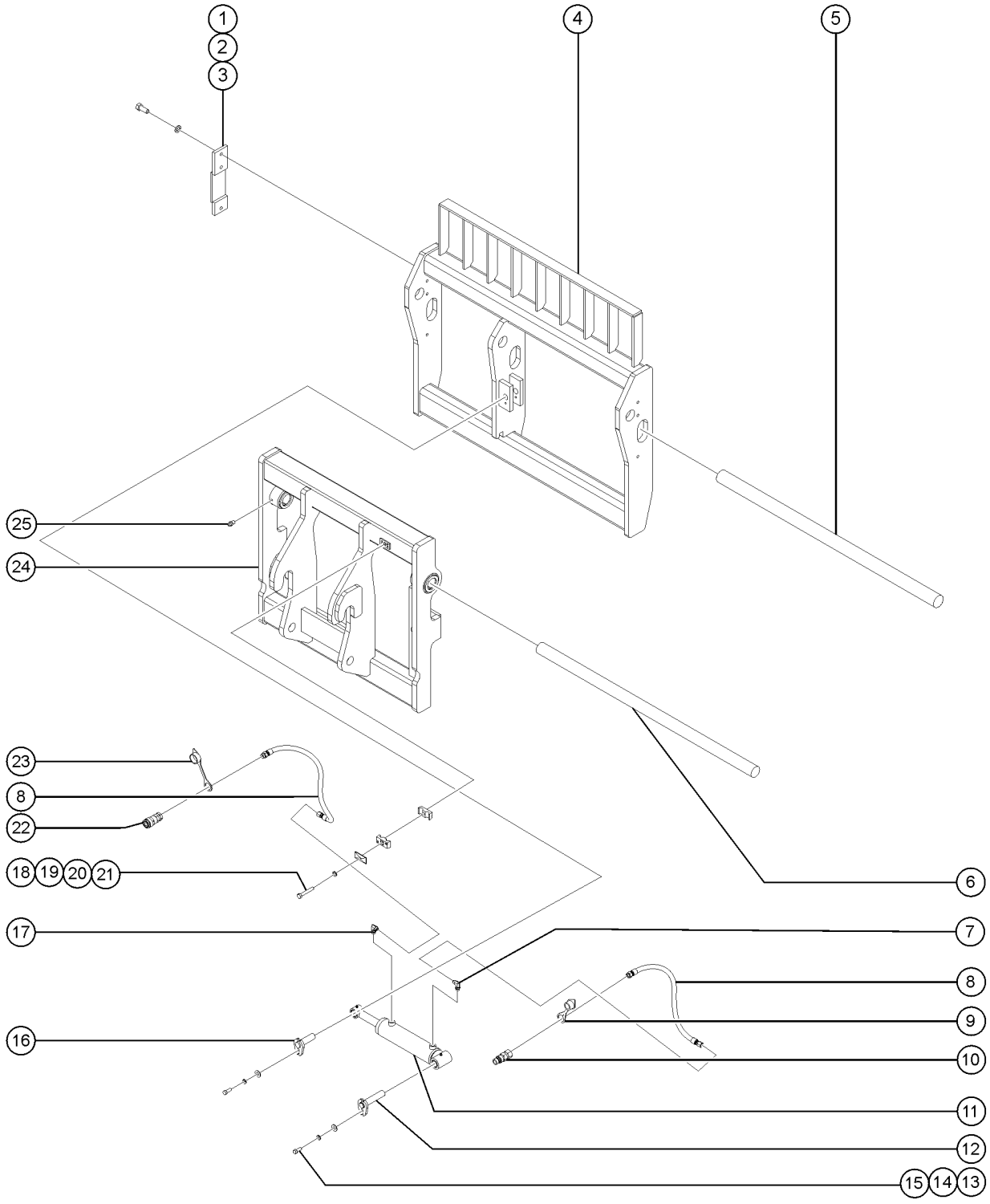

Item	Part No.	Description	Qty.
1	1324817GT	.50-20 UNF X 1.25 HHCS	6
2	1324820GT	.50 LOCK WASHER	6
3	1324831GT	CAP WELDMENT,BOLT ON	2
4	1325264GT	FRAME WMT,48" SIDE SHIFT	1
5	1325262GT	FORK PIN,2.25X50.50	1
6	1324838GT	FORK PIN 2.00X50.00	1
7	1324822GT	ELBOW, 6MBO-6MJ	1
8	1324832GT	HOSE .38x70 6FJ-8MB	2
9	1324828GT	CAP DUST 8 MFF ISO BODY	1
10	1324827GT	QD,M,8FBO,FF,.50 BODY	1
11	1324834GT	CYL ASSY 2.50 X 1.25 X 8.00	1
12	1324830GT	PIN WELDMENT	1
13	1324816GT	SCREW HHC 0.38-24nf X 1.00 GR5 PLD	2
14	1324819GT	.38 LOCK WASHER	2
15	1324821GT	.38 FLAT WASHER	2
16	1324825GT	PIN,BLT,1.00X3.13,PLD	1
17	1324824GT	ELBOW - 90° 6MB-6MJ ORF	1
18	1324815GT	.31-18 UNC X 2.00 HHCS, GR5	1
19	1324818GT	.31 LOCK WASHER	1
20	1324836GT	CLAMP PLATE,TOP.38-.50ID HOSE	1
21	1324835GT	CLAMP,TWIN,PAIR,.75 ID	2
22	1324826GT	QD, F, 8FBO, FF, .50 BODY	1
23	1324829GT	CAP DUST 8 FFF ISO BODY	1
24	1324840GT	REAR FRAME WELDMENT	1
25	1325332GT	GREASE ZERK, 2MP	2

605.1 Fork Frame, Fork Positioner

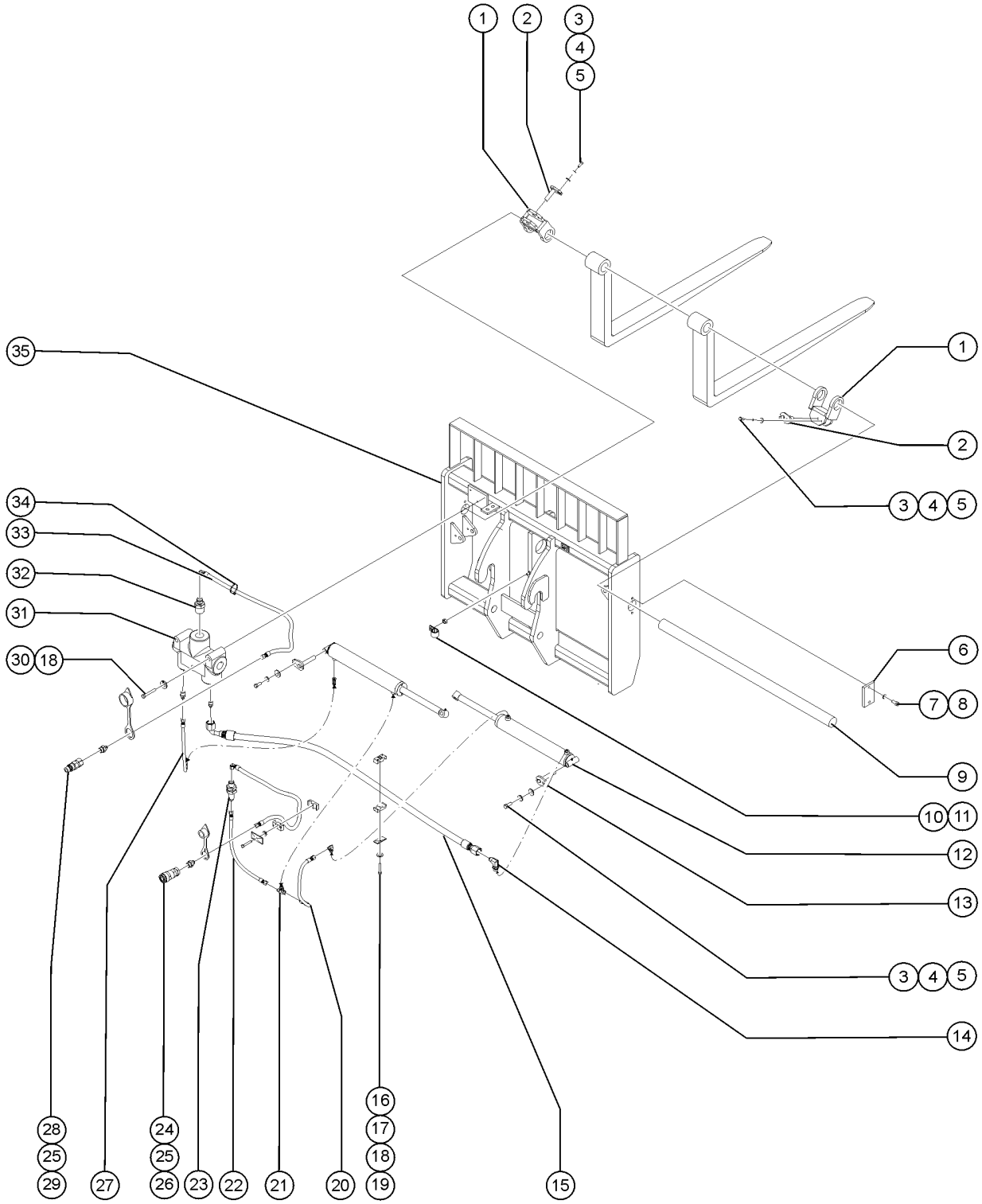

Item	Part No.	Description	Qty.
1	1325267GT	CLEVIS WELDMENT, FORK POSITIONER 2.25	2
2	1325227GT	PIN,BLT,.75X2.81,Z&Y	2
3	1324816GT	SCREW HHC 0.38-24nf X 1.00 GR5 PLD	4
4	1324819GT	.38 LOCK WASHER	4
5	1324821GT	.38 FLAT WASHER	4
6	1325214GT	BAR,FLAT,.50X3.00X5.00	1
7	1324820GT	.50 LOCK WASHER	2
8	1324817GT	.50-20 UNF X 1.25 HHCS	2
9	1325266GT	FORK PIN 2.25X50.00	1
10	1325281GT	CLAMP,HOSE,.81 ID,P-STYLE	1
11	1325347GT	.38 UNC HEX NUT	1
12	1325223GT	CYLINDER ASSY, FORK POSITIONER	2
13	1325215GT	PIN,BLT,.75X4.13	2
14	1325213GT	ELBOW, 6MBO-6MJ	3
15	1325221GT	HOSE .25X34 6FJ-6FJ90S	1
16	1324835GT	CLAMP,TWIN,PAIR,.75 ID	4
17	1324836GT	CLAMP PLATE,TOP.38-.50ID HOSE	2
18	1324818GT	.31 LOCK WASHER	6
19	1324815GT	.31-18 UNC X 2.00 HHCS, GR5	2
20	1325219GT	HOSE .25x22 6FJ-6FJ90S	1
21	1325216GT	TEE, 6MBO-6MJ-6MJ	1
22	1325220GT	HOSE .25x24 6FJ-6FJ 5K	1
23	1325212GT	BULHEAD,6MJ-6MJ	1
24	1324826GT	QD, F, 8FBO, FF, .50 BODY	1
25	1325211GT	CONNECTOR, 8MB0-6MJ	2
26	1324829GT	CAP DUST 8 FFF ISO BODY	1
27	1325218GT	HOSE .25x17 6FJ-6FJ	1
28	1324827GT	QD,M,8FBO,FF,.50 BODY	1

605.1 Fork Frame, Fork Positioner

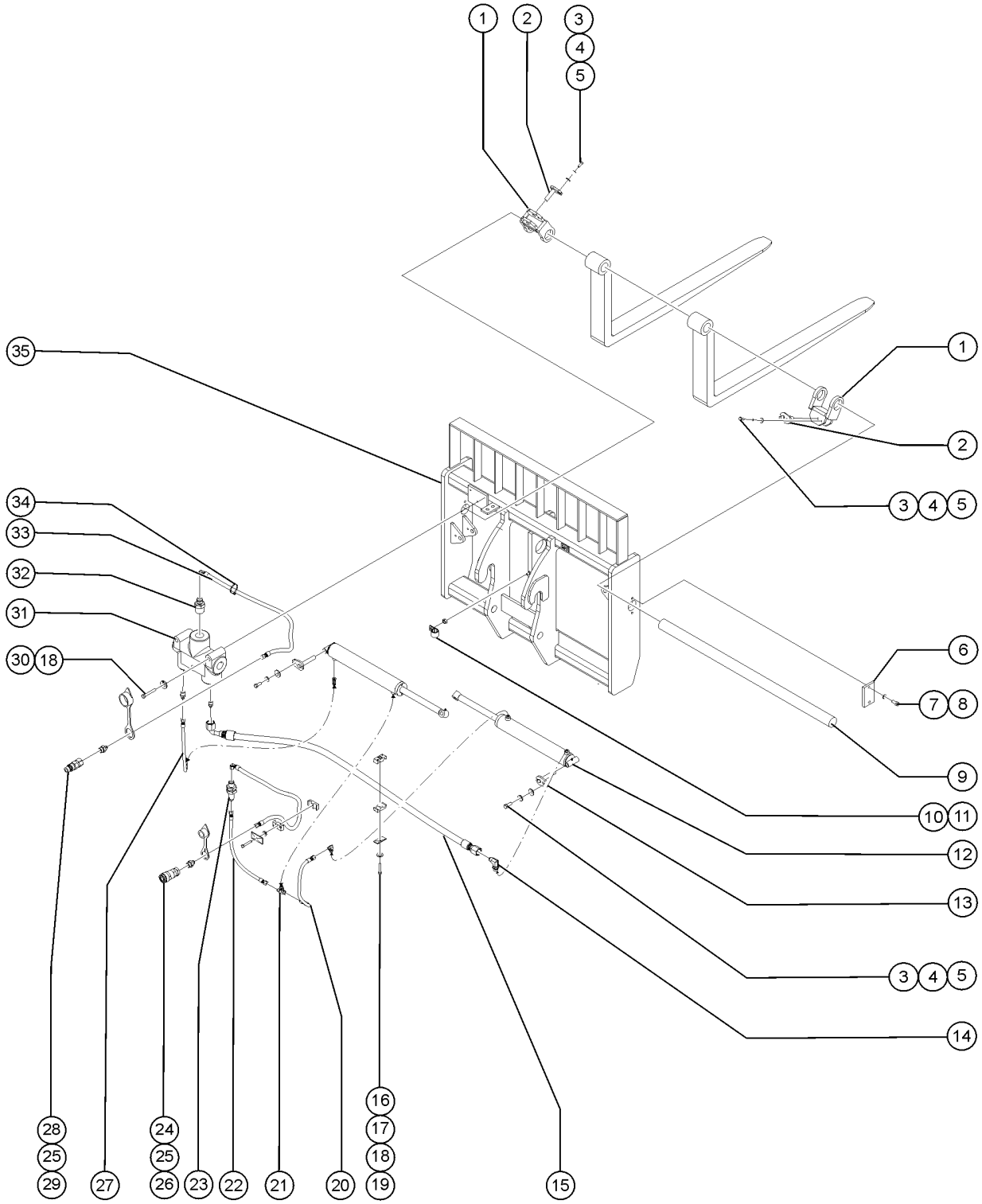

Item	Part No.	Description	Qty.
29	1324828GT	CAP DUST 8 MFF ISO BODY	1
30	1325348GT	CAPSCREW,HEX,.31NFX2.25,GR5,ZC	3
31	1325217GT	VALVE FD SAE8 20GPM	1
32	1325226GT	FTG 6MJ-8MP	3
33	1325222GT	HOSE .38x63 6FJ-6FJ90S 4K HS	2
34	1325403GT	CABLE TIE, 7 3/8"	2
35	1325268GT	FRAME WELDMENT, 48" FORK POSITIONER	1

606.1 Truss Boom

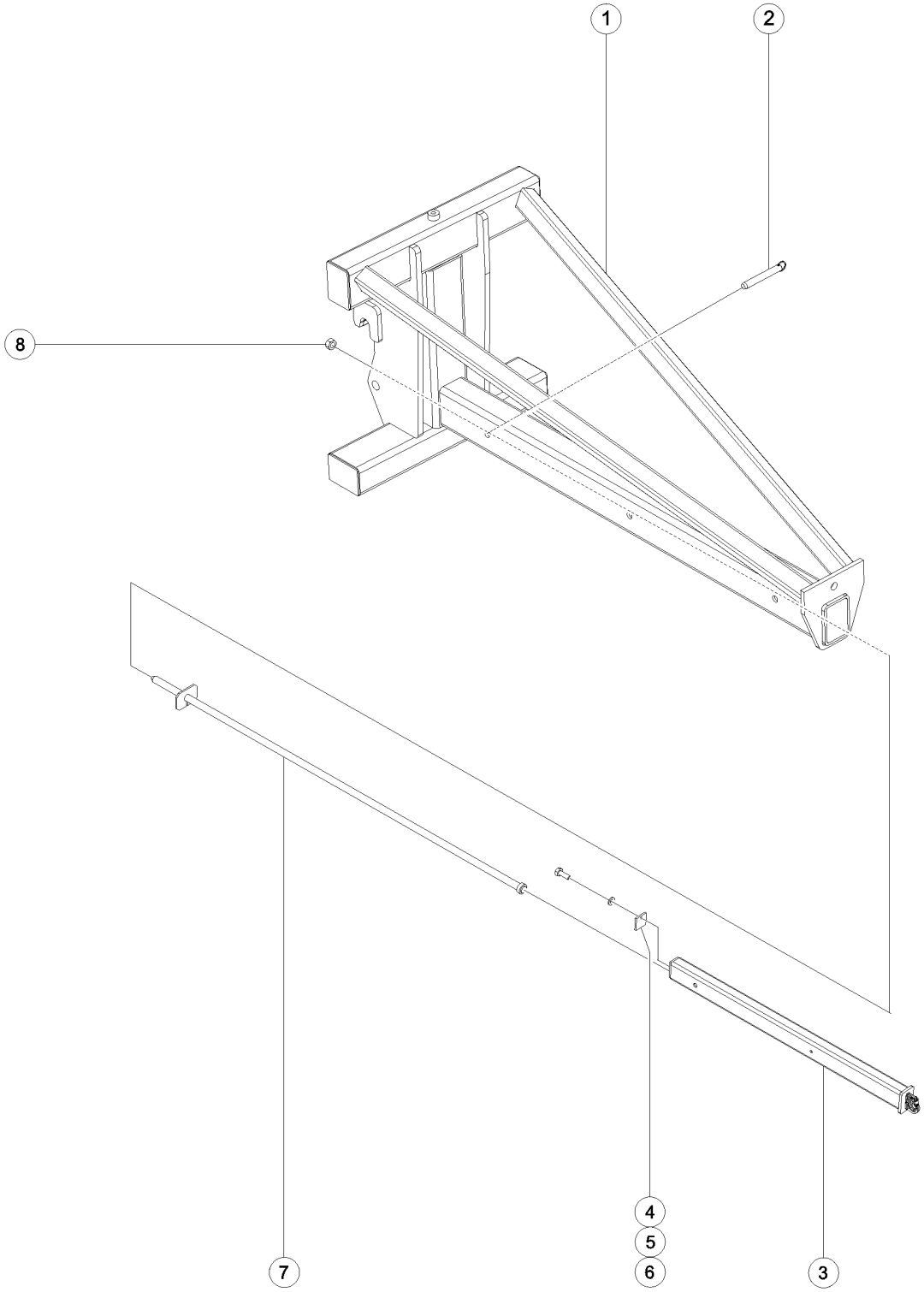

606.1 Truss Boom

Item	Part No.	Description	Qty.
1	1323887GT	TRUSS BOOM WMT,ADJUSTABLE,TRACK MNT	1
2	1323886GT	PIN,STOPPER,TRUSS BOOM	1
3	1323883GT	TRUSS BOOM WMT TELESCOPIC	1
4	1323885GT	BAR,FLAT,.25X2.00X2.00	1
5	1323881GT	0.25-20 UNC X 0.75 HHCS, GR5	1
6	824109GT	WASHER, LOCK, 1/4, ZAG	1
7	1323884GT	ROD WMT TRUSS	1
8	1323882GT	1.00-14 UNS DEFORMED HEX NUT	1

607.1 Bucket

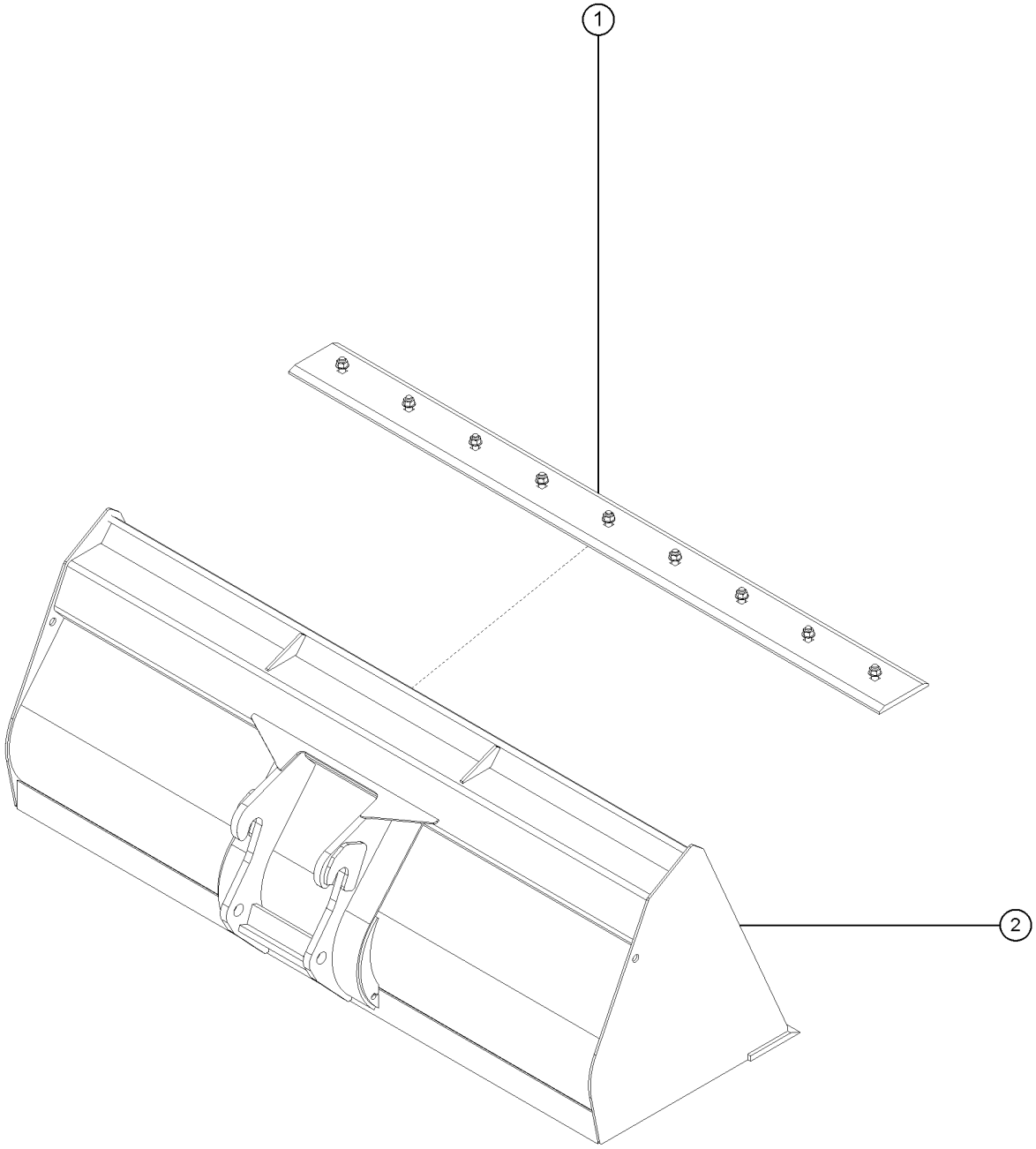

607.1 Bucket

Item	*Part No.*	*Description*	*Qty.*
1	1325286GT	BOLT-ON-EDGE ASSY.	1
2	1325287GT	BUCKET WMT, 1.50 CU YD X 96"	1

701.1 Boom Assembly Number 4

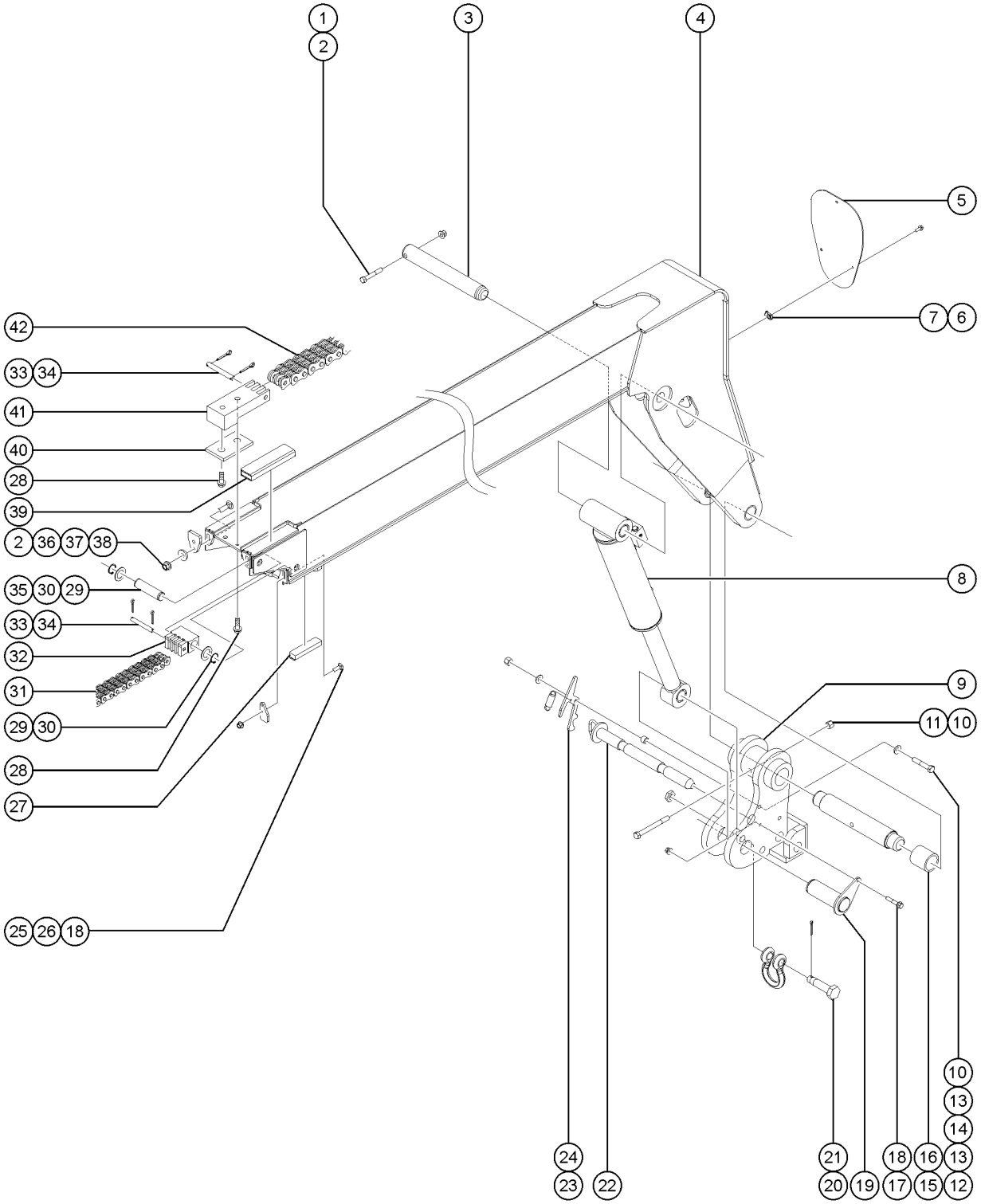

701.1 Boom Assembly Number 4

Item	Part No.	Description	Qty.
1	1256120GT	SCREW,HHC,1/2-13X3.25,8,ZAG	1
2	1274172GT	NUT,NYLOCK FLG,1/2-13,G,ZAG	5
3	1291201GT	PIN,2.00DIAX14.375LG,1HOLE	1
4	1291243GT	ASSEMBLY,TUBE,BOOM #4,GTH1056 (includes bearings)	1
4-	1290774GT	WELDMENT,BOOM #4,GTH1056	
5	1291302GT	PLATE,COVER,HORSEHEAD,GTH1056	1
6	56912GT	SPRING CLIP,1/4-20,.025-.15X.54,ZAG	3
7	824078GT	SCREW,HHF,1/4-20X.75,8,ZAG	3
8	1253245GT	CYLINDER,TILT,1056/844	1
8-	1258122GT	SEAL KIT, TILT CYLINDER 1253245	
8-	123897GT	VALVE,CB.CACG-LGN@4200	
9	1292039GT	WELDMENT, QUICK ATTACH, 10K	1
10	1274320GT	NUT,NYLOCK,1/2-13,C,ZAG	2
11	1257102GT	SCREW,HHC,1/2-13X5,8,ZAG	1
12	1257805GT	SCREW,HHC,1/2-13X2.75,8,ZAG	1
13	825353GT	WASHER,FLAT,1/2,SAE,HRD,ZAG	2
14	1254024GT	TUBE,QA LOCK LEVER SPACER	1
15	108865GT	BEARING,2.50IDX3.00ODX2.00LG	2
16	824927GT	STEP PIN 2.00/2.50X15.37,1HOLE	1
17	1253478GT	SCREW,HHF,3/8-16X2,8,ZAG	1
18	1274322GT	NUT,NYLOCK FLG,3/8-16,F,ZAG	5
19	141949GT	WELDMENT,TILT PIN,KIT	1
20	1312701GT	ASSEMBLY,LIFTING SHACKLE,4.75t	1
21	1294954GT	PIN,COTTER,.1875"X1.5"	1
22	1254050GT	WELDMENT,LOCK PIN	1
23	1275934GT	PLATE,QA LOCK SPRING LEVER, WITH OVERTRAVEL STOP	1
24	123500GT	SPRING	1
25	1255757GT	BOLT,CARRIAGE,3/8-16X1.25,5,ZAG	4

701.1 Boom Assembly Number 4

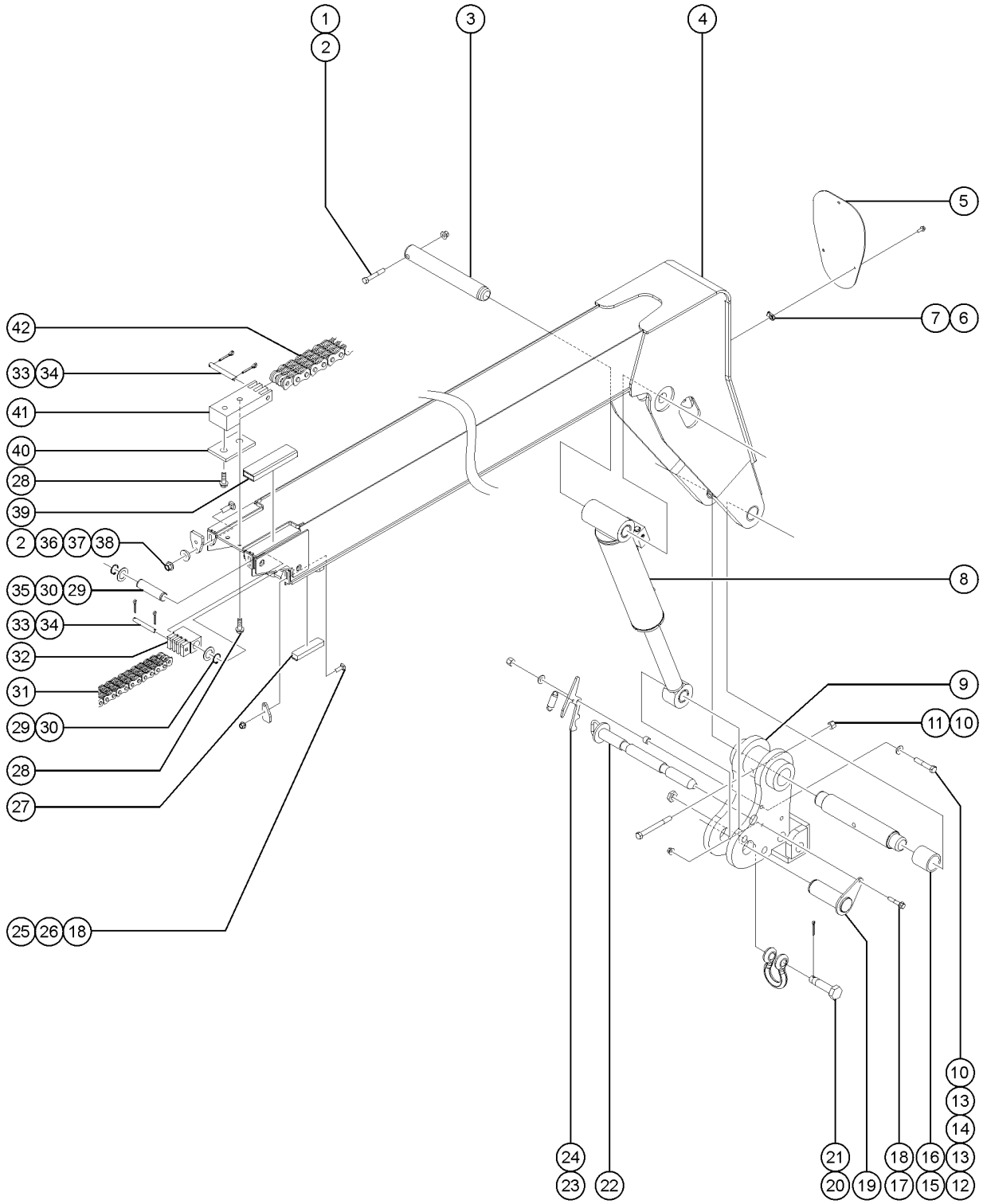

701.1 Boom Assembly Number 4

Item	Part No.	Description	Qty.
26	1278881GT	PLATE,RETAIN WPAD RR LOW	2
27	141708GT	WEARPAD, 7.0 X 1.686 X 1.2225	2
28	1257726GT	SCREW,HHF-S,1/2-13X1.5,5,ZAG	4
29	1253843GT	SNAP RING,EXTERNAL,1.00,ZAG	2
30	1256119GT	WASHER,SHIM,1.01X1.63X.062,ZAG	2
31	1291460GT	CHAIN,RETRACT,BL866,GTH1056	1
32	130872GT	CHAIN ANCHOR,PINNED,BL-666	1
33	130386GT	PIN,CHAIN ANCHOR,.313X2.625	3
34	6-6243-06GT	COTTER PIN, 3/32 X 3/4 LG	6
35	79579GT	PIN,1.00DIAX4.51LG,2RING	1
36	141745GT	WASHER,HARDEND 1.375X.531X.177	4
37	1278701GT	PLATE, RETAIN, WEAR PAD RR UPPER	2
38	1256115GT	BOLT,CARRIAGE,1/2-13X1.75,5,ZAG	4
39	1291245GT	WEARPAD,12 X 3.0 X 1.4025	2
40	1254025GT	PLATE,CHAIN ANCHOR POINT	2
41	117780GT	ANCHOR,CHAIN,STEPPED,BL666	2
42	1291457GT	CHAIN,EXTEND,BL666,GTH1056	2

702.1 Boom Assembly Number 3

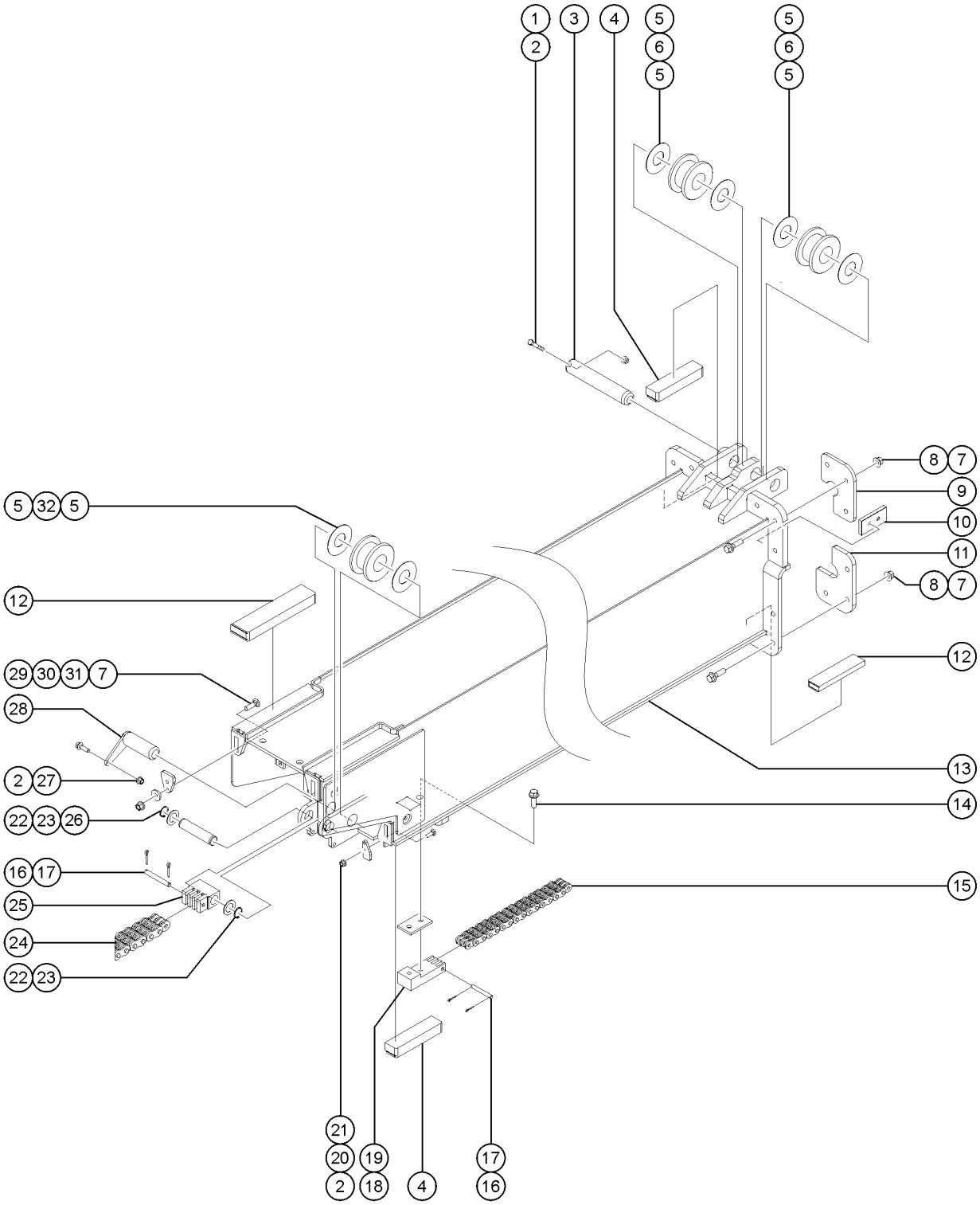

702.1 Boom Assembly Number 3

Item	Part No.	Description	Qty.
1	824069GT	SCREW, HHC, 3/8-16 X 2.5, 8, ZAG	1
2	1274322GT	NUT,NYLOCK FLG,3/8-16,F,ZAG	6
3	117777GT	PIN,1.50DIAX8.75LG,1HOLE	1
4	141708GT	WEARPAD, 7.0 X 1.686 X 1.2225	4
5	1256117GT	WASHER,SHIM,1.56X3.5X.061,ZAG	6
6	141717GT	ASSY, 666 SHEAVE POLYLUBE	2
7	1274172GT	NUT,NYLOCK FLG,1/2-13,G,ZAG	16
8	826171GT	SCREW,HHF,1/2-13X1.75,ZAG	12
9	826228GT	PLATE, RETAINER WEARPAD FF	2
10	141713GT	WEARPAD,4.0 X 2.375 X .75	4
11	1291244GT	PLATE,RETAINER,WEARPAD,FRONT	2
12	1291245GT	WEARPAD,12 X 3.0 X 1.4025	4
13	1290856GT	WELDMENT,BOOM #3,GTH1056	1
14	1257726GT	SCREW,HHF-S,1/2-13X1.5,5,ZAG	4
15	1291458GT	CHAIN,EXTEND,BL866,GTH1056	2
16	141045GT	PIN, CHAIN ANCHOR,.375X2.96	3
17	6-6243-06GT	COTTER PIN, 3/32 X 3/4 LG	6
18	130930GT	CHAIN ANCHOR,STEPPED,866	2
19	1254025GT	PLATE,CHAIN ANCHOR POINT	2
20	1278881GT	PLATE,RETAIN WPAD RR LOW	2
21	1255757GT	BOLT,CARRIAGE,3/8-16X1.25,5,ZAG	4
22	824164GT	SNAP RING, EXTERNAL,1.25, ZAG	2
23	824152GT	WASHER,SHIM,1.270X1.875X.062,Z	2
24	141029GT	CHAIN,BL866 RETRACT,GTH-1056	1
25	1291425GT	CHAIN ANCHOR,1.25" PIN,BL866	1
26	1291444GT	PIN,1.25DIAX4.51LG,2RING	1
27	824091GT	SCREW, HHF, 3/8-16 X 1.25, 8, ZAG	1
28	1291447GT	WELDMENT,PIN,1.5"DIAX4.625L	1

702.1 Boom Assembly Number 3

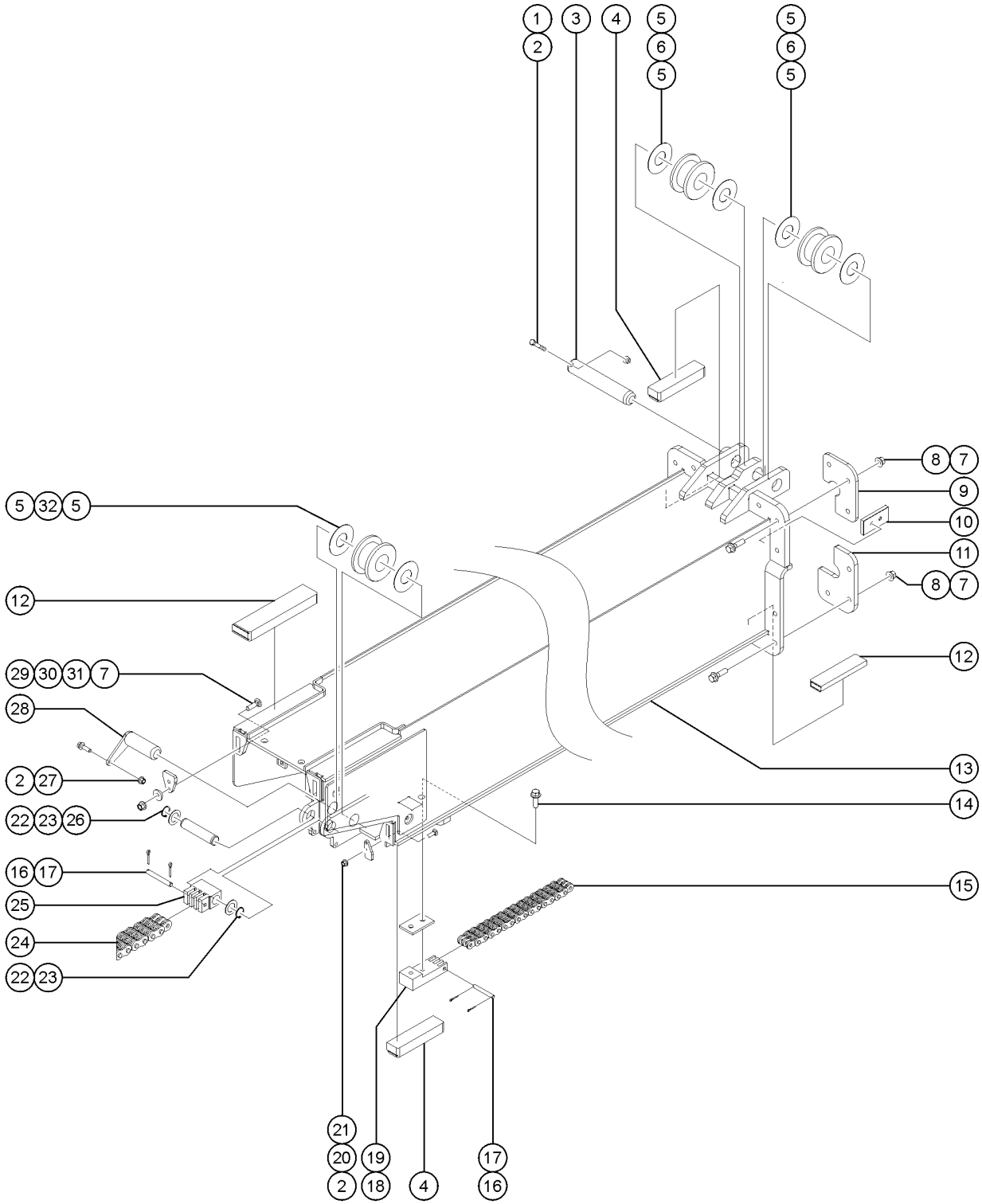

Item	Part No.	Description	Qty.
29	1256115GT	BOLT,CARRIAGE,1/2-13X1.75,5,ZAG	4
30	1278701GT	PLATE, RETAIN, WEAR PAD RR UPPER	2
31	141745GT	WASHER,HARDEND 1.375X.531X.177	4
32	130535GT	CHAIN SHEAVE ASSY,POLYGON	1

703.1 Boom Assembly Number 2

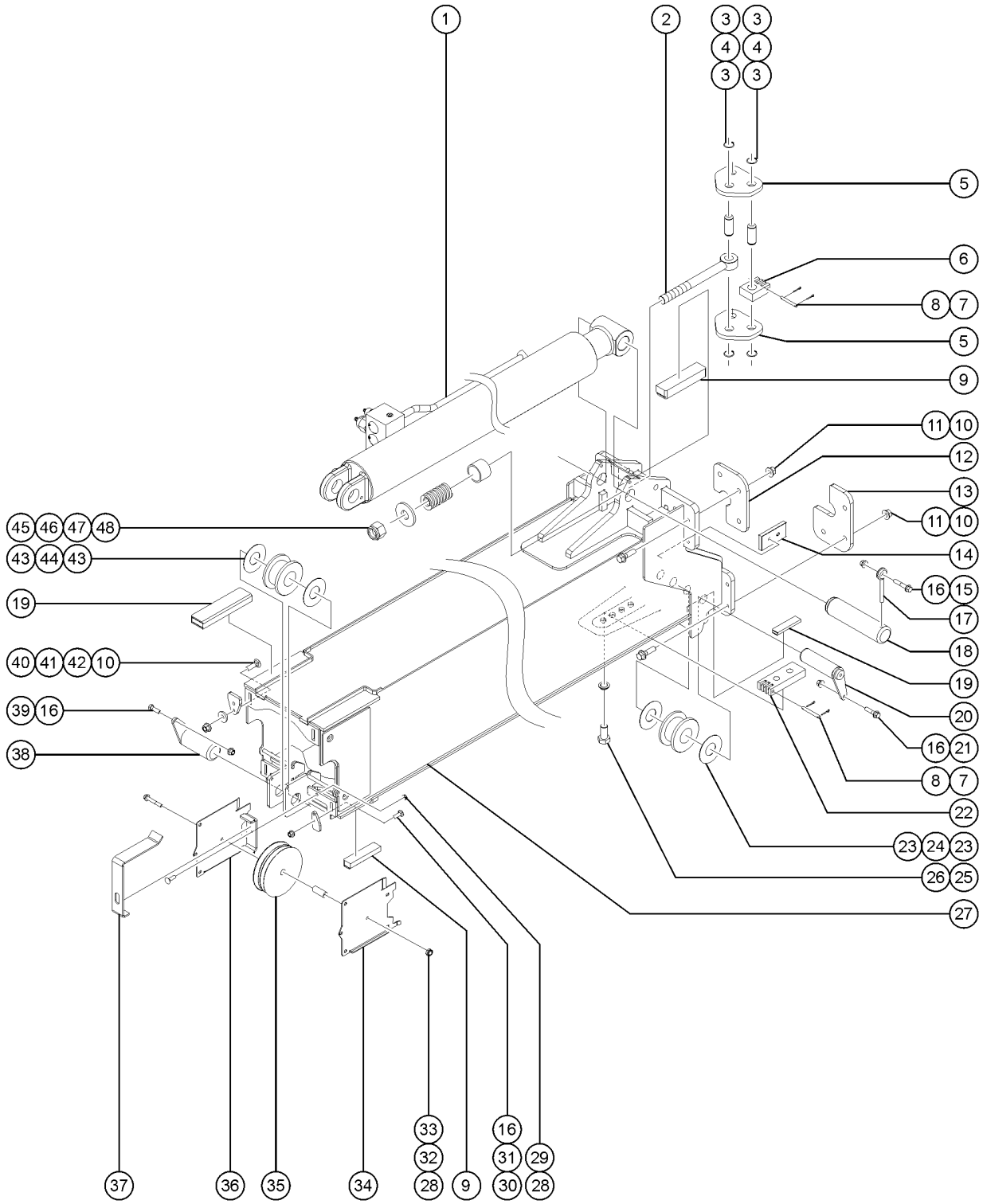

703.1 Boom Assembly Number 2

Item	Part No.	Description	Qty.
1	1288654GT	CYLINDER, EXTEND	1
1-	1300814GT	KIT,SEAL,EXTEND,1056	1
1-	141334GT	VALVE,C'BALANCE,DUAL STAGE	1
1-	1303483GT	VALVE,COUNTERBALANCE,CAGA,LHN,3200PSI	1
2	117693GT	ROD END,CHAIN TENSIONER,1056	1
3	1253843GT	SNAP RING,EXTERNAL,1.00,ZAG	6
4	123184GT	PIN,2 RING GROOVE	3
5	123185GT	PLATE,CHAIN PIVOT	2
6	123186GT	ANCHOR,EXTEND CHAIN	2
7	130386GT	PIN,CHAIN ANCHOR,.313X2.625	3
8	6-6243-06GT	COTTER PIN, 3/32 X 3/4 LG	6
9	141708GT	WEARPAD, 7.0 X 1.686 X 1.2225	4
10	1274172GT	NUT,NYLOCK FLG,1/2-13,G,ZAG	16
11	1256172GT	SCREW,HHF,1/2-13X 2,8,ZAG	12
12	826228GT	PLATE, RETAINER WEARPAD FF	2
13	1291244GT	PLATE,RETAINER,WEARPAD,FRONT	2
14	141713GT	WEARPAD,4.0 X 2.375 X .75	4
15	1253478GT	SCREW,HHF,3/8-16X2,8,ZAG	1
16	1274322GT	NUT,NYLOCK FLG,3/8-16,F,ZAG	8
17	825019GT	ROD END, .375X3.69, ZAG	1
18	1291260GT	PIN,2.00DIAX8.25LG,1HOLE	1
19	1291245GT	WEARPAD,12 X 3.0 X 1.4025	4
20	1291257GT	WELDMENT,PIN,1.5"DIAX5.55L	2
21	824092GT	SCREW,HHF,3/8-16X1.5,8,ZAG	2
22	123168GT	CHAIN ANCHOR, BOLT ON	1
23	1256117GT	WASHER,SHIM,1.56X3.5X.061,ZAG	4
24	1291445GT	ASSEMBLY,CHAIN SHEAVE,BL866,POLYLUBE,4.28"DIA	2
25	1256116GT	SCREW,HHC,3/4-16X1.5,8,ZAG	2

703.1 Boom Assembly Number 2

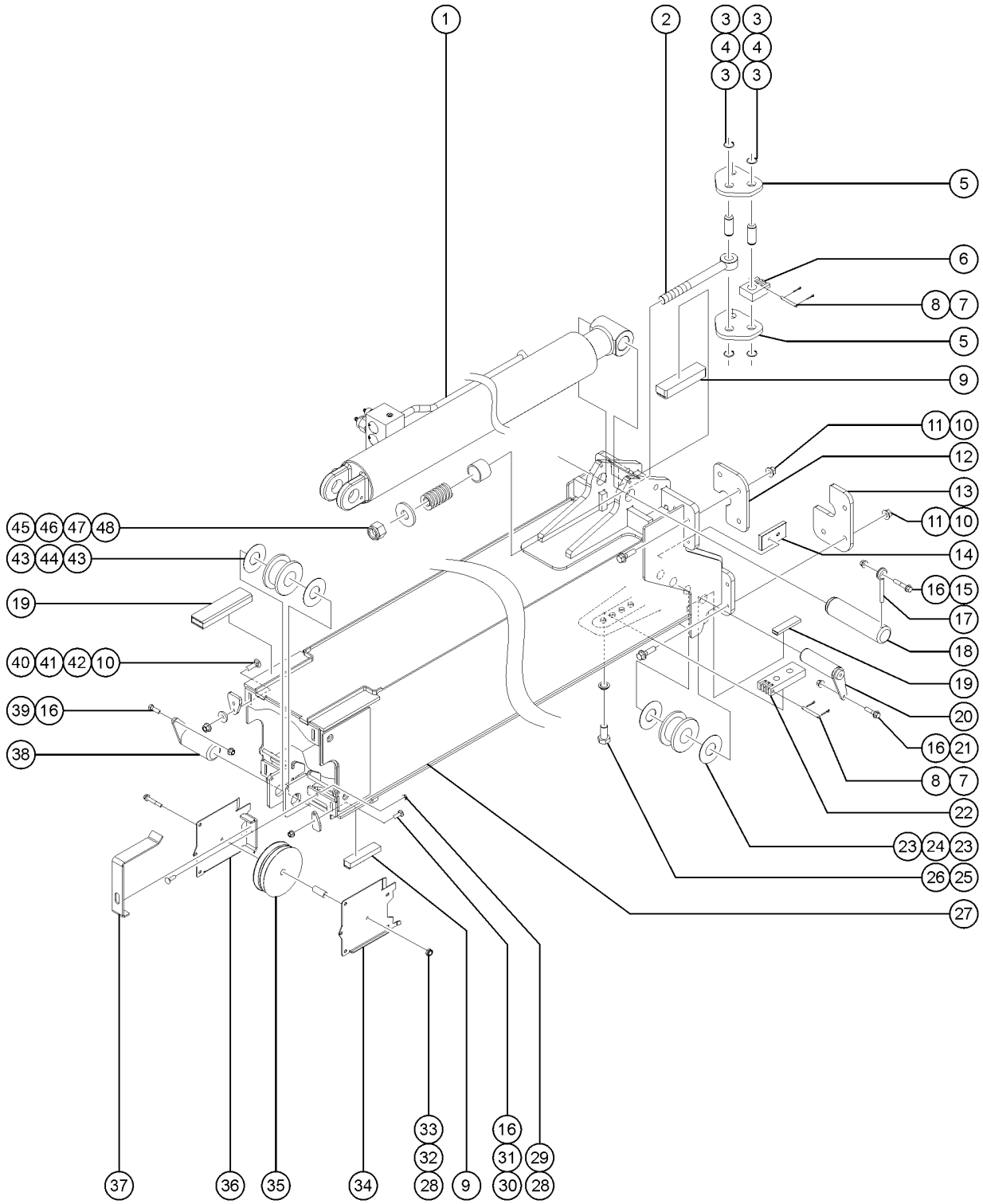

Item	Part No.	Description	Qty.
26	141090GT	WASHER,3/4 NORDLOCK	2
27	1290865GT	WELDMENT,BOOM #2,GTH1056	1
28	1283028GT	NUT,LP NYLOCK,3/8-16,2,ZAG	10
29	1255629GT	SCREW,BHC,3/8-16X1.25,F835,ZAG	1
30	1255757GT	BOLT,CARRIAGE,3/8-16X1.25,5,ZAG	5
31	1278881GT	PLATE,RETAIN WPAD RR LOW	2
32	1297224GT	SPACER,HOSE ROLLER,RYKO TWIN HOSE	6
33	1256856GT	SCREW,HHF,3/8-16X2.5,8,ZAG	8
34	1291646GT	FORMING, SHEAVE PLT,PAINTED,7.0" TWIN HOSE	2
35	1291648GT	SHEAVE,#8 TWIN HOSE,7.0IN	2
36	1291643GT	WELDMENT,SHEAVE,HOSE,7.0" TWIN HOSE	2
37	1291647GT	FORMING,SHEAVE COVER,7.0" TWIN HOSE	2
38	1291254GT	WELDMENT,PIN,2.0"DIAX4.625L	1
39	824068GT	SCREW, HHC, 3/8-16 X 1.25, 8, ZAG	1
40	1256115GT	BOLT,CARRIAGE,1/2-13X1.75,5,ZAG	4
41	1278701GT	PLATE, RETAIN, WEAR PAD RR UPPER	2
42	141745GT	WASHER,HARDEND 1.375X.531X.177	4
43	1256864GT	WASHER,FLAT,2.01X3.5X.06,ZAG	2
44	1291440GT	ASSEMBLY,CHAIN SHEAVE,BL866,POLYLUBE,3.75"DIA	1
45	5-2137GT	NUT,NYLOCK,1-14	1
46	117774GT	WASHER,FLAT,1.06X2.75X.25	1
47	123169GT	SPRING, COMPRESSION	1
48	1254038GT	TUBE,RD,STL,2.5 X .180 X 1.75L	1

704.1 Boom Assembly Number 1, View 1

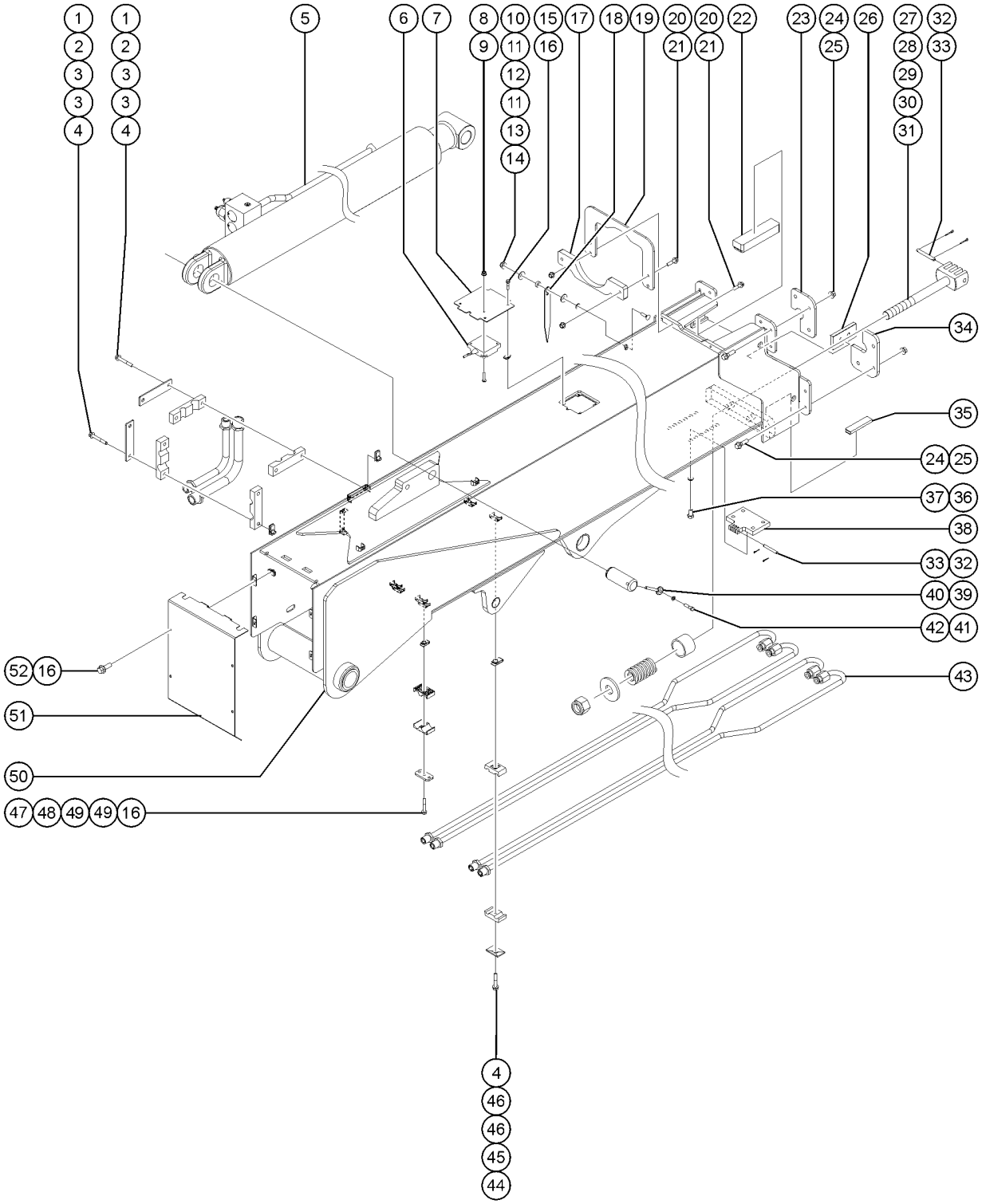

704.1 Boom Assembly Number 1, View 1

Item	Part No.	Description	Qty.
1	1255801GT	SCREW,HHF,5/16-18X2.25,8,ZAG	4
2	1295228GT	PLATE,CLAMP,MOUNT,EXT	2
3	1295229GT	CLAMP,TUBE,HALF,EXT	4
4	36456GT	SPRING CLIP,5/16-18,.025-.15X.	12
5		Ref. CYLINDER, EXTEND Refer to 703.1	1
6	1297269GT	HARNESS,BOOM EXTEND SWITCH	1
7	1291246GT	PLATE,COVER,PROX SWITCH	1
8	1283005GT	NUT,NYLOCK FLG,10-32,A,ZAG	2
9	826516GT	SCREW, PHPM, 10-32 X 1.0, ZAG	2
10	1277924GT	NUT,NYLOCK FLG,1/4-20,F,ZAG	1
11	824113GT	WASHER,FLAT,USS,1/4,ZAG	2
12	1302074GT	SPACER,NYLON,1/2 X .260 X 3/16	1
13	238135GT	PUSHNUT RETAINER, 1/4" X 1/2"OD, ZINC	1
14	1256127GT	BOLT,CARRIAGE,1/4-20X1",GR 5,ZAG	1
15	824080GT	SCREW, HHF, 1/4-20 X 1.25, 8, ZAG	4
16	56912GT	SPRING CLIP,1/4-20,.025-.15X.54,ZAG	10
17	1291303GT	REST PAD,EXT CYL	1
18	1301867GT	PLATE,ANGLE INDICATOR	1
19	1291301GT	PLATE,EXT CYL HOOP	1
20	824092GT	SCREW,HHF,3/8-16X1.5,8,ZAG	4
21	1274322GT	NUT,NYLOCK FLG,3/8-16,F,ZAG	4
22	141708GT	WEARPAD, 7.0 X 1.686 X 1.2225	2
23	826228GT	PLATE, RETAINER WEARPAD FF	2
24	1274172GT	NUT,NYLOCK FLG,1/2-13,G,ZAG	12
25	826171GT	SCREW,HHF,1/2-13X1.75,ZAG	12
26	141713GT	WEARPAD,4.0 X 2.375 X .75	4
27	130931GT	CHAIN ANCHOR,THREADED,BL866	2
28	1254038GT	TUBE,RD,STL,2.5 X .180 X 1.75L	2

704.1 Boom Assembly Number 1, View 1

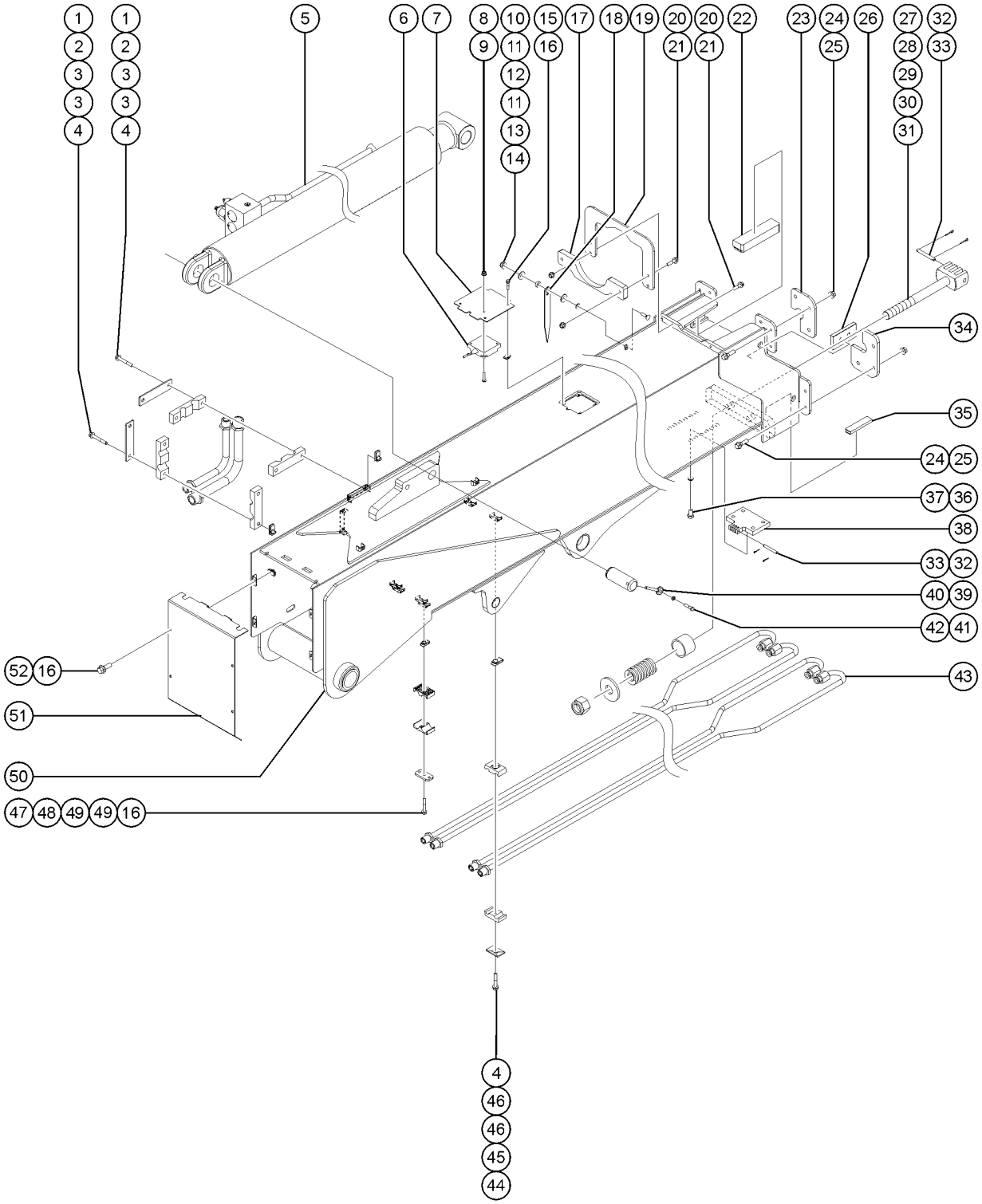

704.1 Boom Assembly Number 1, View 1

Item	Part No.	Description	Qty.
29	123169GT	SPRING, COMPRESSION	2
30	117774GT	WASHER,FLAT,1.06X2.75X.25	2
31	5-2137GT	NUT,NYLOCK,1-14	2
32	141045GT	PIN, CHAIN ANCHOR,.375X2.96	3
33	6-6243-06GT	COTTER PIN, 3/32 X 3/4 LG	6
34	1291244GT	PLATE,RETAINER,WEARPAD,FRONT	2
35	1291245GT	WEARPAD,12 X 3.0 X 1.4025	2
36	1256116GT	SCREW,HHC,3/4-16X1.5,8,ZAG	4
37	141090GT	WASHER,3/4 NORDLOCK	4
38	130938GT	CHAIN ANCHOR,BOLT ON	1
39	825019GT	ROD END, .375X3.69, ZAG	1
40	1291443GT	PIN,2.0DIAX5.25LG,1HOLE	1
41	1256118GT	SCREW,HHC,3/8-16X1.5,8,ZAG	1
42	824110GT	WASHER, LOCK, 3/8, ZAG	1
43	1291056GT	ASSEMBLY,TUBE,TILT,AUX	4
44	1255800GT	SCREW,HHF,5/16-18X1.75,8,ZAG	8
45	123176GT	PLATE, TOP	8
46	123175GT	CLAMP HALF SET,TWIN,1/2"TUBE	16
47	824082GT	SCREW, HHF, 1/4-20 X 1.75, 8, ZAG	2
48	1254429GT	PLATE,HOSE ROUTING,BULKHEAD	2
49	1296928GT	CLAMP,2 HOSE,PLASTIC,#8	4
50		REF. ASSEMBLY,TUBE,BOOM #1,GTH1056 Refer to 705.1	1
51	1291704GT	FORMING,BOOM COVER,REAR	1
52	824078GT	SCREW,HHF,1/4-20X.75,8,ZAG	4

705.1 Boom Assembly Number 1, View 2

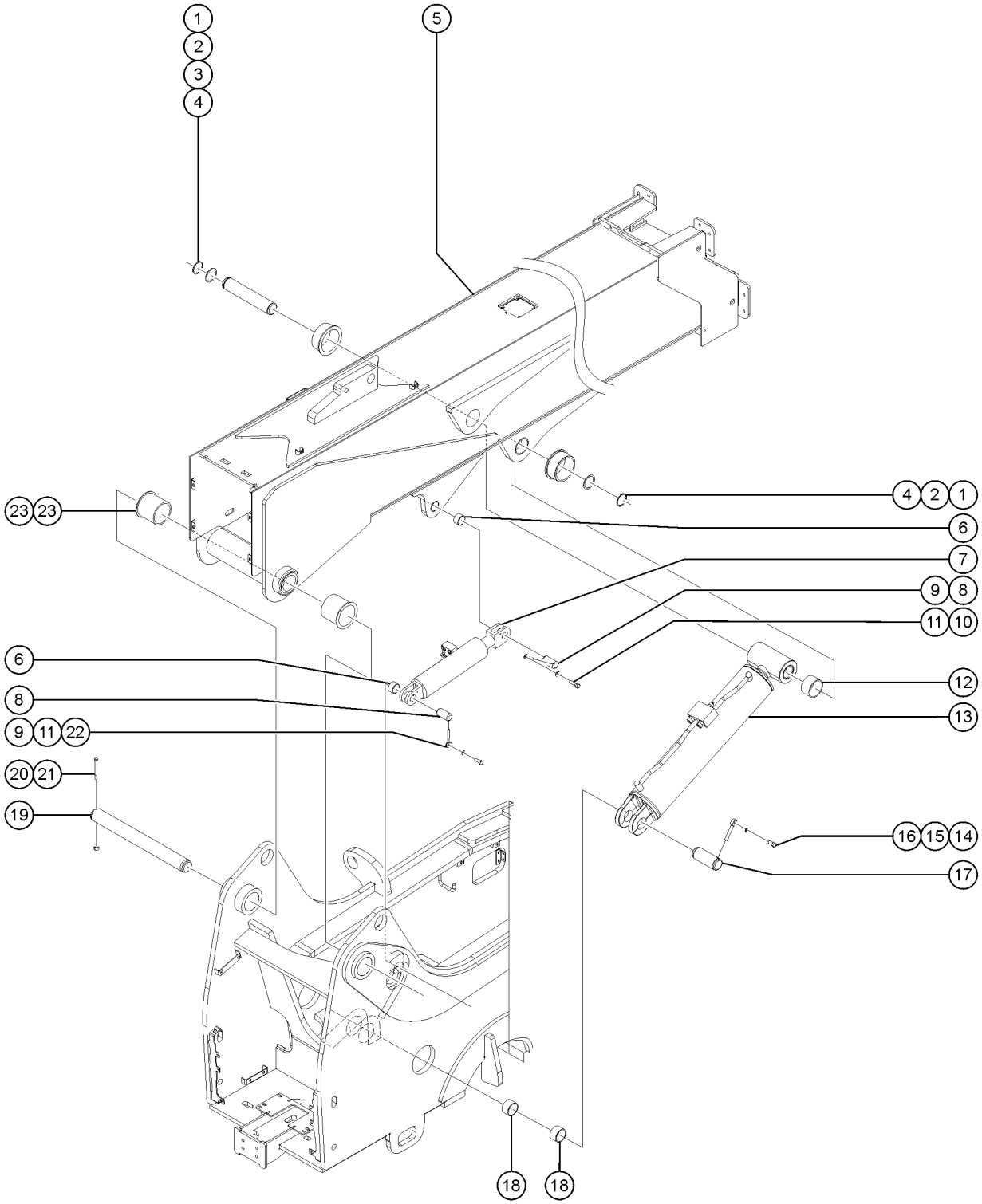

705.1 Boom Assembly Number 1, View 2

Item	Part No.	Description	Qty.
1	1253814GT	SNAP RING,EXTERNAL,3.25,ZAG	2
2	106545GT	WASHER,FLAT,3.28 X 4 X .105	2
3	1291197GT	PIN,3.25ODX17.00LG,2 RINGS	1
4	1289026GT	BEARING,FL,3.25IDX3.75ODX1.5L	2
5	1291242GT	ASSEMBLY,TUBE,BOOM #1,GTH1056 (includes bearings)	1
5-	1290775GT	WELDMENT,BOOM #1,GTH1056	
6	826136GT	BEARING,2.00IDX2.25ODX1.25L	2
7	1290430GT	CYLINDER, MASTER GTH1056 to SN GTH10E-16264,(No Longer Available,Replaced By 1310127GT)	1
7-	1300816GT	KIT,SEAL,MASTER,1056	1
7B	1310127GT	CYLINDER, MASTER GTH1056 from SN GTH10E-16265	1
7B-	1300816GT	KIT,SEAL,MASTER,1056	1
8	117125GT	PIN,2.00DIAX4.00LG,1 HOLE	2
9	825019GT	ROD END, .375X3.69, ZAG	1
10	824068GT	SCREW, HHC, 3/8-16 X 1.25, 8, ZAG	1
11	824110GT	WASHER, LOCK, 3/8, ZAG	2
12	101562GT	BEARING,3.25IDX3.75ODX2.00L	2
13	1288655GT	CYLINDER, LIFT (includes bearings)	1
13-	1300815GT	KIT,SEAL,LIFT,1056	1
13-	1299631GT	VALVE,COUNTERBALANCE,CAGA,LHN,4000PSI	1
14	1256116GT	SCREW,HHC,3/4-16X1.5,8,ZAG	1
15	1256113GT	WASHER,LOCK,3/4,ZAG	1
16	1256308GT	ROD END,.75 X 5,ZAG	1
17	1288902GT	PIN, 3.25DIA X 8.15LG, 1 HOLE	1
18	1294700GT	BEARING,3.25IDX3.75ODX1.5L	2
19	1291423GT	PIN,3.5 OD X 33.90 LG,1 HOLE	1
20	1256112GT	SCREW,HHC,1/2-13X6,8,ZAG	1
21	1274320GT	NUT,NYLOCK,1/2-13,C,ZAG	1
22	824067GT	SCREW, HHC, 3/8-16 X 1, 8, ZAG	1

705.1 Boom Assembly Number 1, View 2

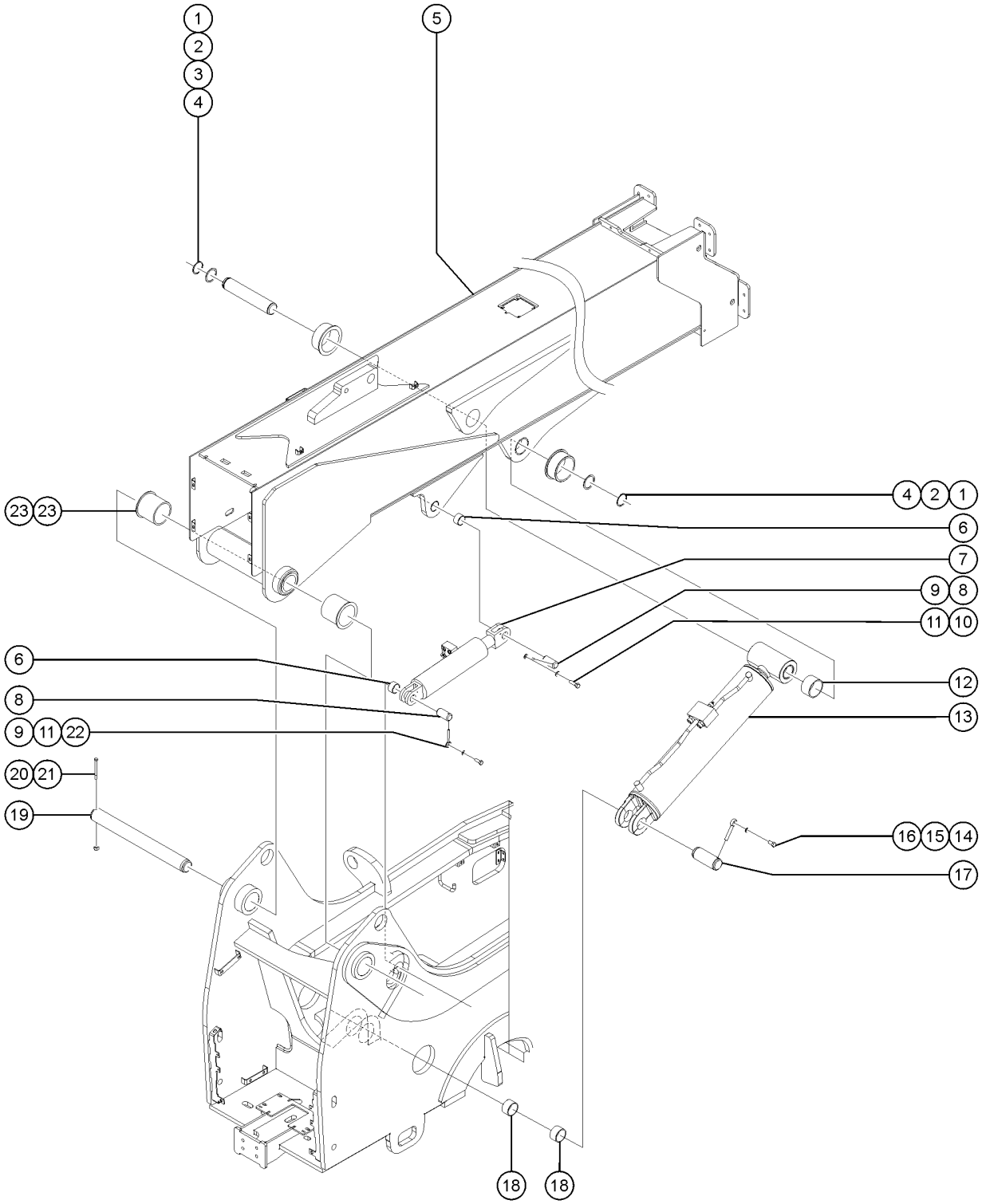

705.1 Boom Assembly Number 1, View 2

Item	*Part No.*	*Description*	*Qty.*
23	1303116GT	BEARING, FL, 3.5 ID X 4.0 OD X 3.0 L	2

706.1 Cable Track Assembly

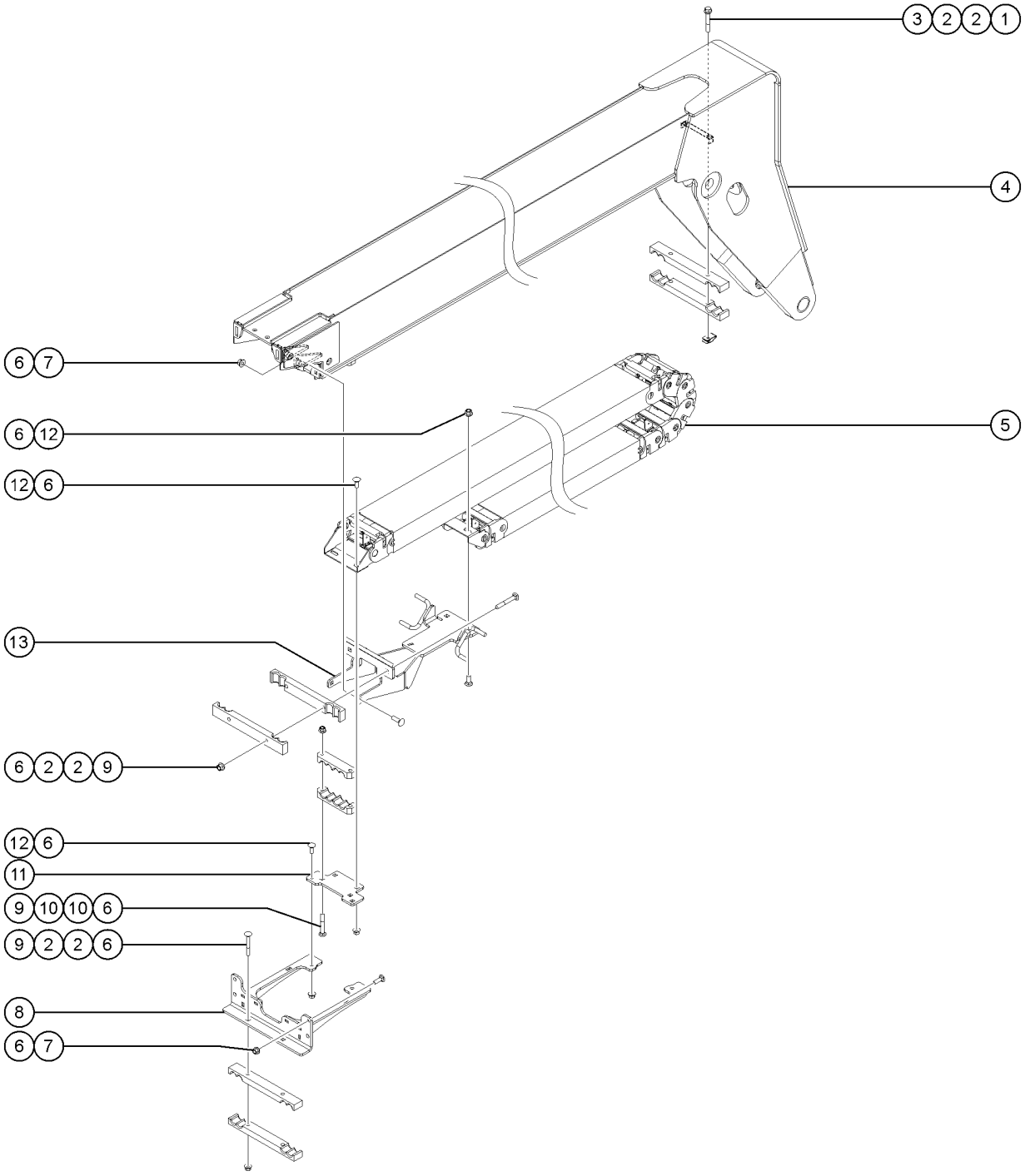

706.1 Cable Track Assembly

Item	Part No.	Description	Qty.
1	1256856GT	SCREW,HHF,3/8-16X2.5,8,ZAG	2
2	1295373GT	PLATE, CLAMP, TWIN HOSE,HYD, -8, WIDE	6
3	29868GT	SPRING CLIP,3/8-16,.05-.20X.73,ZAG	2
4		Ref. WELDMENT,BOOM #4,GTH1056 Refer to 701.1	1
5	1295372GT	CABLE TRACK, NYLATRAC KL2-85, 178.50	1
6	1274322GT	NUT,NYLOCK FLG,3/8-16,F,ZAG	18
7	1255757GT	BOLT,CARRIAGE,3/8-16X1.25,5,ZAG	6
8	1295361GT	WELDMENT, CABLE TRACK,BOOM MOUNT	1
9	1260076GT	BOLT,CARRIAGE,3/8-16X2.75,5,ZAG	6
10	1295374GT	PLATE, CLAMP, TWIN HOSE,HYD, -8, NARROW	2
11	1295364GT	PLATE, CABLE TRACK, UPPERTRACK MOUNT	1
12	824125GT	BOLT, CARRIAGE, 3/8-16 X 1, 5, ZAG	6
13	1295365GT	WELDMENT, CABLE TRACK,LOWER MOUNT	1

707.1 Boom Light

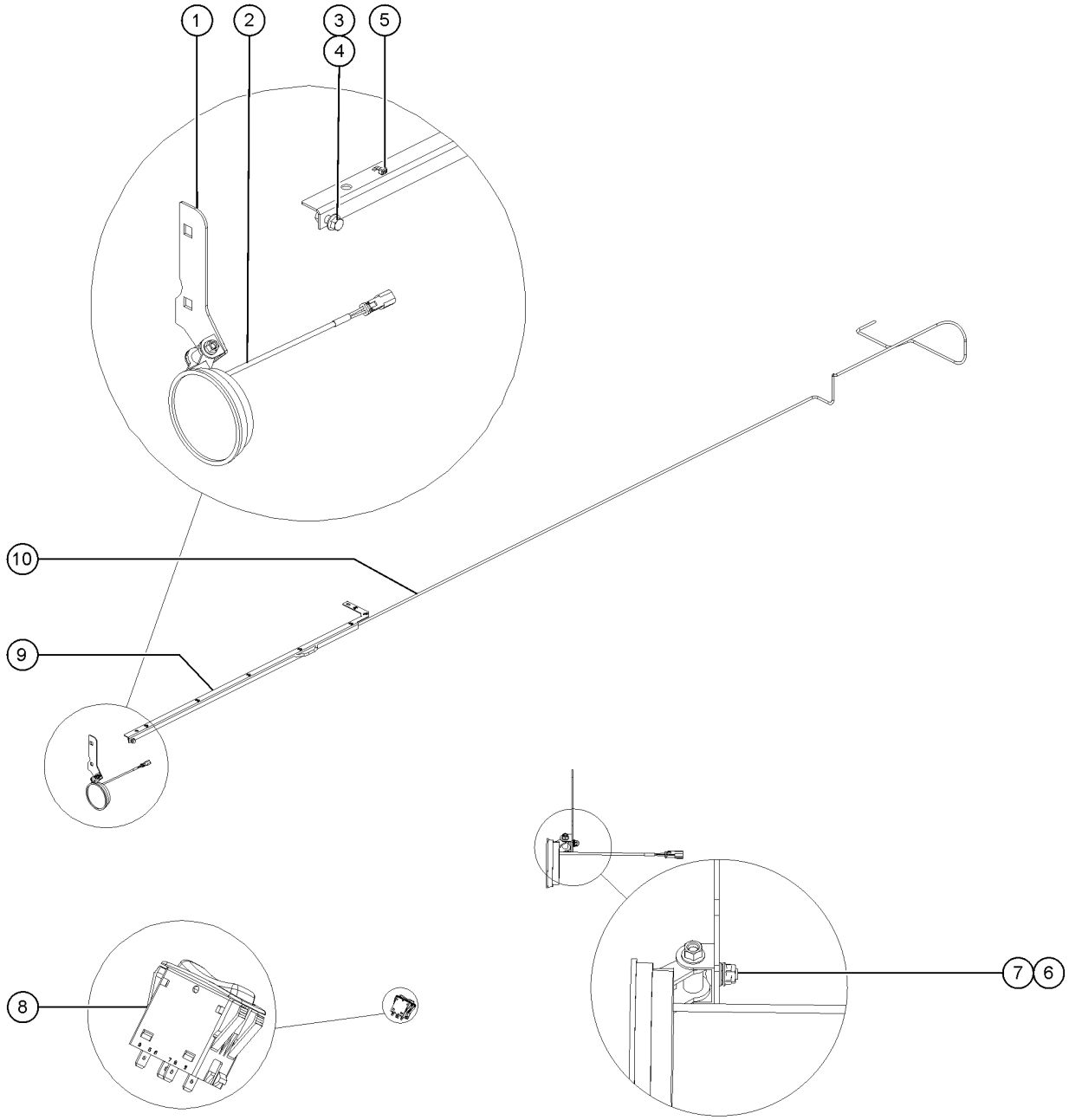

707.1 Boom Light

Item	Part No.	Description	Qty.
1	1256649GT	PLATE, BOOM LIGHT MOUNT	1
2	1258527GT	HARNESS,LIGHT,LED,CLEAR,5"ROUN	1
3	824090GT	SCREW,HHF,3/8-16X1,8,ZAG	1
4	1274322GT	NUT,NYLOCK FLG,3/8-16,F,ZAG	1
5	28443GT	CABLE TIE, 11.5" BLACK	7
6	824028GT	NUT, TL FLG, 5/16-18, G, ZAG	1
7	1257745GT	BOLT,CARRIAGE,5/16-18X.75,5,ZA	1
8	1255735GT	SWITCH, BOOM LIGHTS	1
9	1295627GT	FORMING, SUPPORT, BOOM HARNESS	1
10	1263760GT	HARNESS, BOOM LIGHT POWER	1

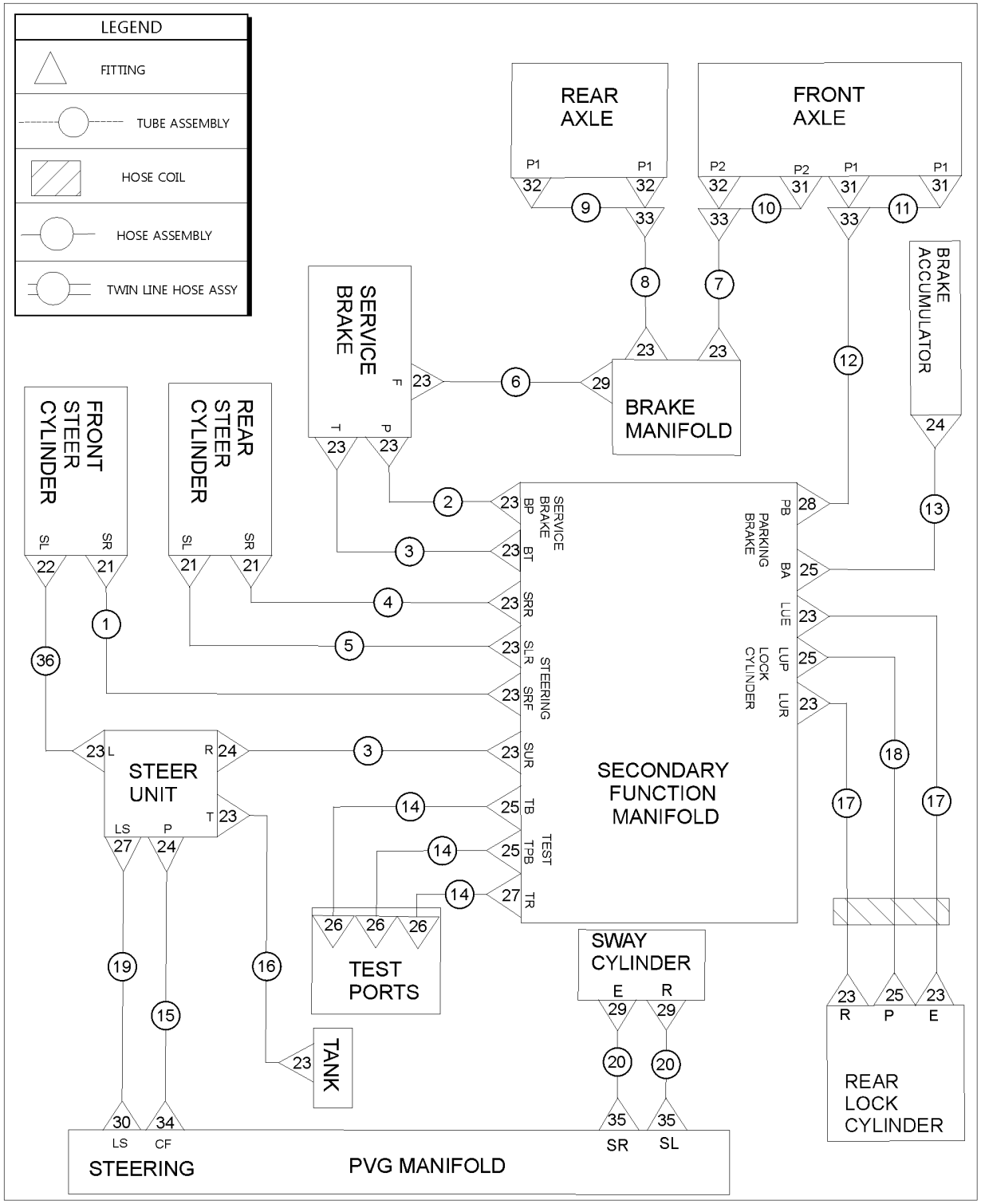
LEGEND
FITTING
TUBE ASSEMBLY
HOSE COIL
HOSE ASSEMBLY
TWIN LINE HOSE ASSY
REAR AXLE
FRONT AXLE
BRAKE ACCUMULATOR
SERVICE BRAKE
BRAKE MANIFOLD
FRONT STEER CYLINDER
REAR STEER CYLINDER
STEER UNIT
SECONDARY FUNCTION MANIFOLD
SERVICE BRAKE
PARKING BRAKE
LOCK CYLINDER
STEERING
TEST
TEST PORTS
SWAY CYLINDER
TANK
REAR LOCK CYLINDER
STEERING
PVG MANIFOLD

801.1 Hydraulic Hose and Fittings, View 1

Item	Part No.	Description	Qty.
1	49128-6400GT	HOSE ASSY,3/8,90 FEM,STR FEM	1
2	49130-4100GT	HOSE ASSY 3/8, STR FEM,STR FEM	1
3	49130-3900GT	ASSY, HOSE, HYD, -6, 3000, STR, STR	2
4	49128-11859GT	HOSE ASSY,3/8,90 FEM,STR FEM	1
5	49128-11859GT	HOSE ASSY,3/8,90 FEM,STR FEM	1
6	49130-4400GT	ASSY, HOSE, HYD, -6, 3000, STR, STR	1
7	49130-5000GT	ASSY, HOSE, HYD, -6, 3000, STR, STR	1
8	49130-11700GT	HOSE ASSY 3/8, STR FEM,STR FEM	1
9	49128-1450GT	ASSY, HOSE, HYD, -8, 3000, STR, 45	1
10	49128-1700GT	HOSE ASSY,3/8,90 FEM,STR FEM 120hp	1
10B	49128-1800GT	ASSY, HOSE, HYD, -6, 3000, STR, 90 74hp	1
11	49128-1600GT	HOSE ASSY,3/8,90 FEM,STR FEM	1
12	49128-6000GT	ASSY, HOSE, HYD, -8, 3000, STR, 45	1
13	49163-2000GT	ASSY, HOSE, HYD, -4, 3250, STR, 90	1
14	49119-5000GT	HOSE ASSY,1/4,STR FEM,STR FEM	3
15	49130-16000GT	ASSY, HOSE, HYD, -6, 3000, STR, STR	1
16	49130-5800GT	ASSY, HOSE, HYD, -6, 3000, STR, STR	1
17	49128-14600GT	ASSY, HOSE, HYD, -8, 3000, STR, 45	2
18	49117-14600GT	ASSY, HOSE, HYD, -4, 3250, STR, 90	1
19	49116-15800GT	ASSY, HOSE, HYD, -4, 3250, STR, 45	1
20	49131-22100GT	ASSY, HOSE, HYD, -6, 3000, STR, STR	2
21	1266588GT	ADPTR,STR,6MFFOR-18MMB DIN3852	3
22	1295463GT	ELBOW,90D,M18ORB,6ORF	1
23	48916GT	CONN, 520120-6	18
24	48930GT	FITTING,CONN,520120-6-8***	3
25	48905GT	CONNECTOR, 520120-4	5
26	1298940GT	FITTING,DIAGNOSTIC,BULKHEAD,-4ORFS	3
27	48904GT	ELBOW, 90D, 520220-4	2

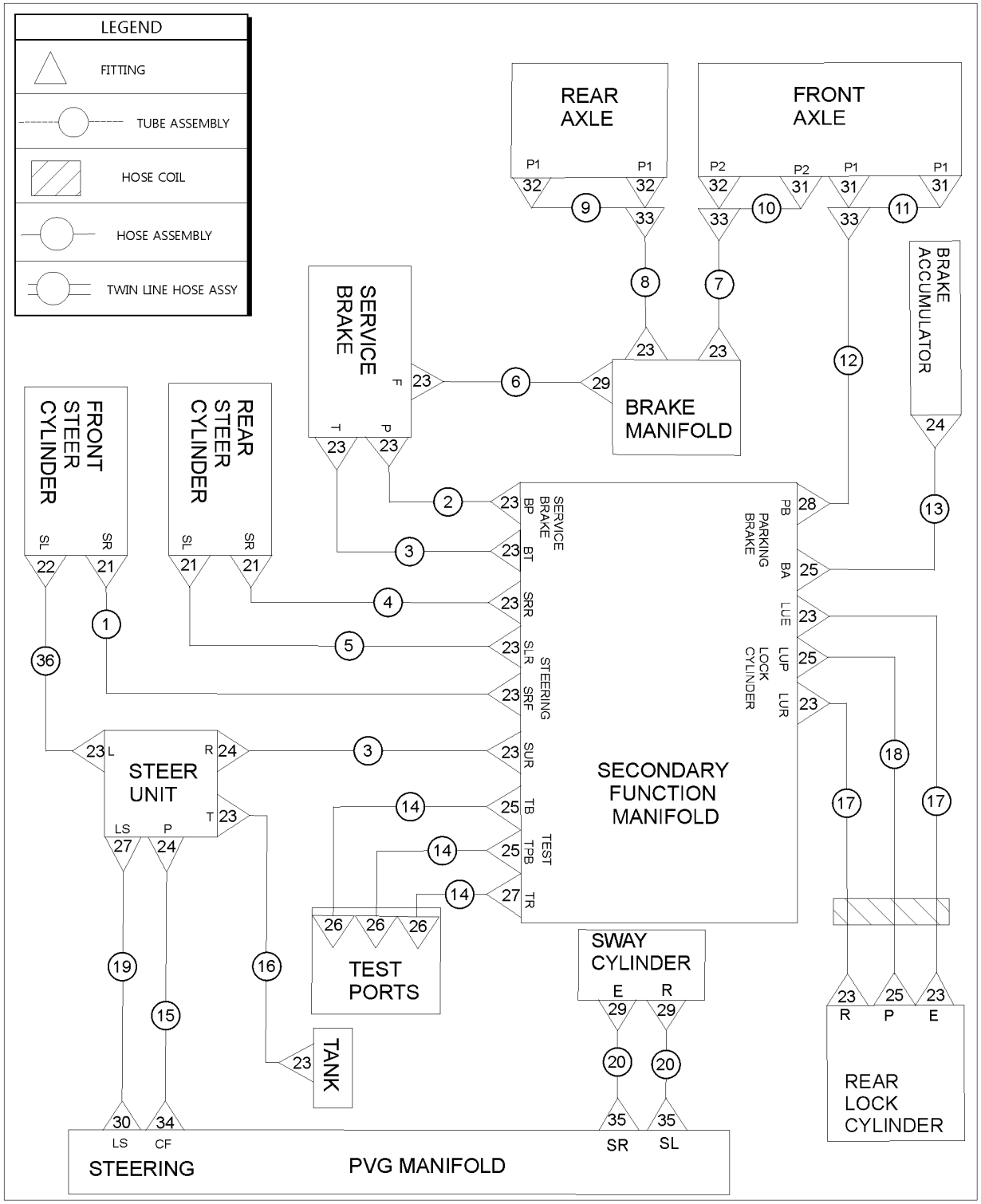
LEGEND
FITTING
TUBE ASSEMBLY
HOSE COIL
HOSE ASSEMBLY
TWIN LINE HOSE ASSY
REAR AXLE
FRONT AXLE
BRAKE ACCUMULATOR
SERVICE BRAKE
BRAKE MANIFOLD
FRONT STEER CYLINDER
REAR STEER CYLINDER
STEER UNIT
SECONDARY FUNCTION MANIFOLD
SERVICE BRAKE
PARKING BRAKE
STEERING
LOCK CYLINDER
TEST PORTS
SWAY CYLINDER
TANK
REAR LOCK CYLINDER
STEERING
PVG MANIFOLD

801.1 Hydraulic Hose and Fittings, View 1

Item	*Part No.*	*Description*	*Qty.*
28	48927GT	CONN,520120-6-4	1
29	48915GT	ELBOW,90D,520220-6	3
30	48912GT	CONN,520120-4-6***	1
31	117809GT	ADAPTER,6MFF0R-14MMB	3
32	1295461GT	ELBOW,45D,M14ORB,6ORF	3
33	48875GT	TEE,RUN,SWIVEL,520432-6	3
34	61264GT	ELBOW,90D,520220,6-10	1
35	48946GT	CONN,520120-8-10	2
36	49126-6400GT	ASSY, HOSE, HYD, -6, 3000, STR, 45	1

802.1 Hydraulic Hose and Fittings, View 2

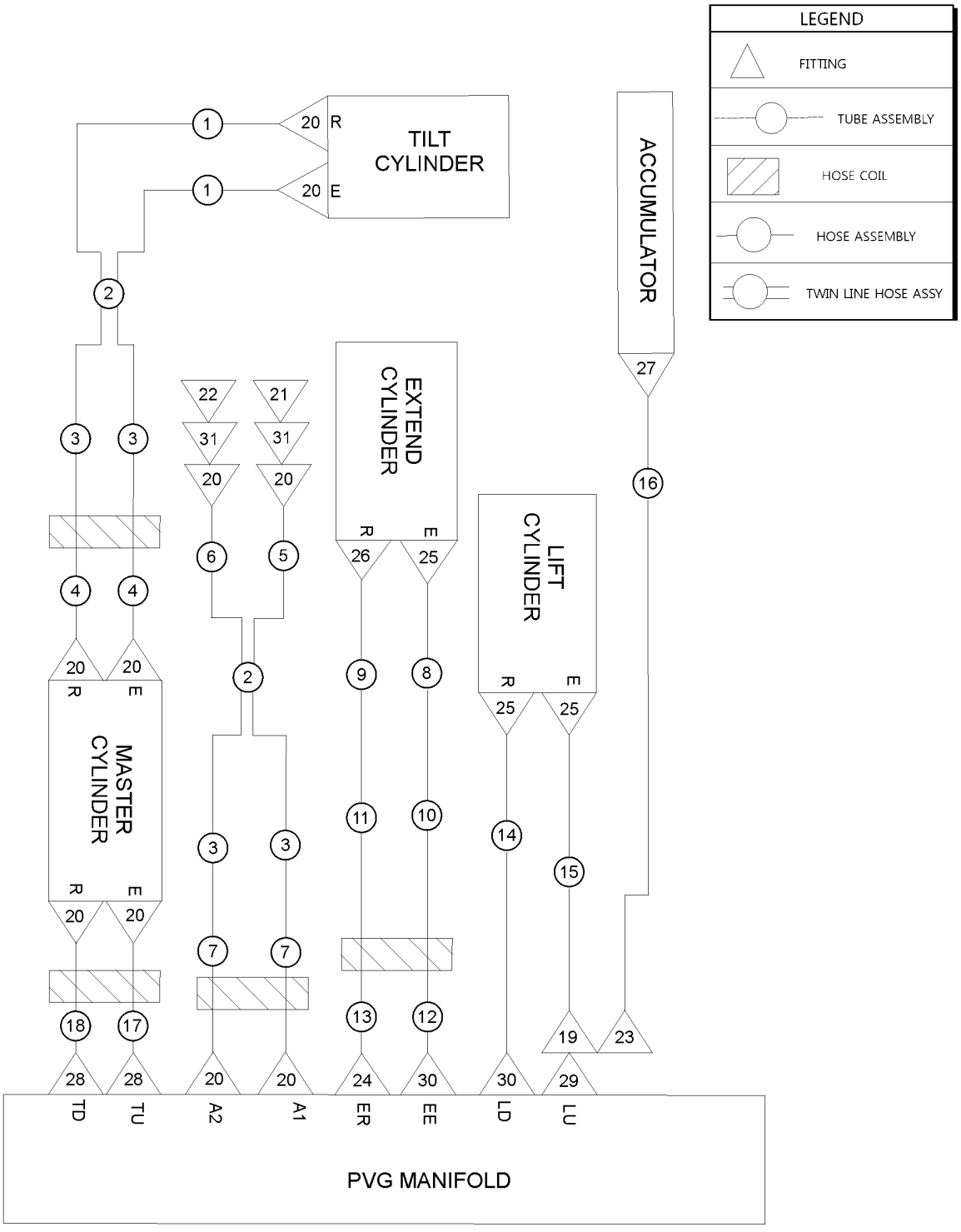

802.1 Hydraulic Hose and Fittings, View 2

Item	Part No.	Description	Qty.
1	49138-1700GT	ASSY, HOSE, HYD, -8, 3100, STR ,90	2
2	1295360GT	ASSY, TWIN HOSE, HYD, -8, 3000, STR, STR	2
3	1291056GT	ASSEMBLY,TUBE,TILT,AUX	4
4	49183-3700GT	HOSE ASSY,1/2,STR FEM,STR FEM	2
5	49141-1700GT	ASSY, HOSE, HYD, -8, 3000, STR, 45	1
6	49141-1650GT	ASSY, HOSE, HYD, -8, 3000, STR, 45	1
7	49183-7400GT	HOSE ASSY,1/2,STR FEM,STR FEM	2
8	1296632-2100GT	ASSY,HOSE,HYD,-16,3000,STR, 90	1
9	106817-2300GT	ASSY, HOSE, HYD, -12, 3000, STR, 90LNG	1
10	1292184GT	ASSEMBLY,HARDLINE,EXTEND,GTH1056	1
11	1292185GT	ASSEMBLY,HARDLINE,RETRACT,GTH1056	1
12	1297337-6900GT	ASSY, HOSE, HYD, -16, 3000, STR, STR	1
13	1291556-7100GT	ASSY, HOSE, HYD, -12, 3000, STR, STR	1
14	1297337-5200GT	ASSY, HOSE, HYD, -16, 3000, STR, STR	1
15	1297337-4400GT	ASSY, HOSE, HYD, -16, 3000, STR, STR	1
16	1301236-1900GT	ASSY, HOSE, HYD, -4, 3250, STR, 45	1
17	49183-5100GT	HOSE ASSY,1/2,STR FEM,STR FEM	1
18	49183-4900GT	HOSE ASSY,1/2,STR FEM,STR FEM	1
19	1301243GT	TEE,-12FORFS,-12MORFS,-4MORB	1
20	48933GT	CONN,520120-8***	10
21	123180GT	QUICK COUPLING,MALE	1
22	123181GT	QUICK COUPLING,FEMALE	1
23	48905GT	CONNECTOR, 520120-4	1
24	48952GT	FITTING,CONN,520120-10	1
25	48984GT	CONN, 520120-16	3
26	48960GT	FITTING,CONN,520120-12***	1
27	48930GT	FITTING,CONN,520120-6-8***	1
28	48946GT	CONN,520120-8-10	2

802.1 Hydraulic Hose and Fittings, View 2

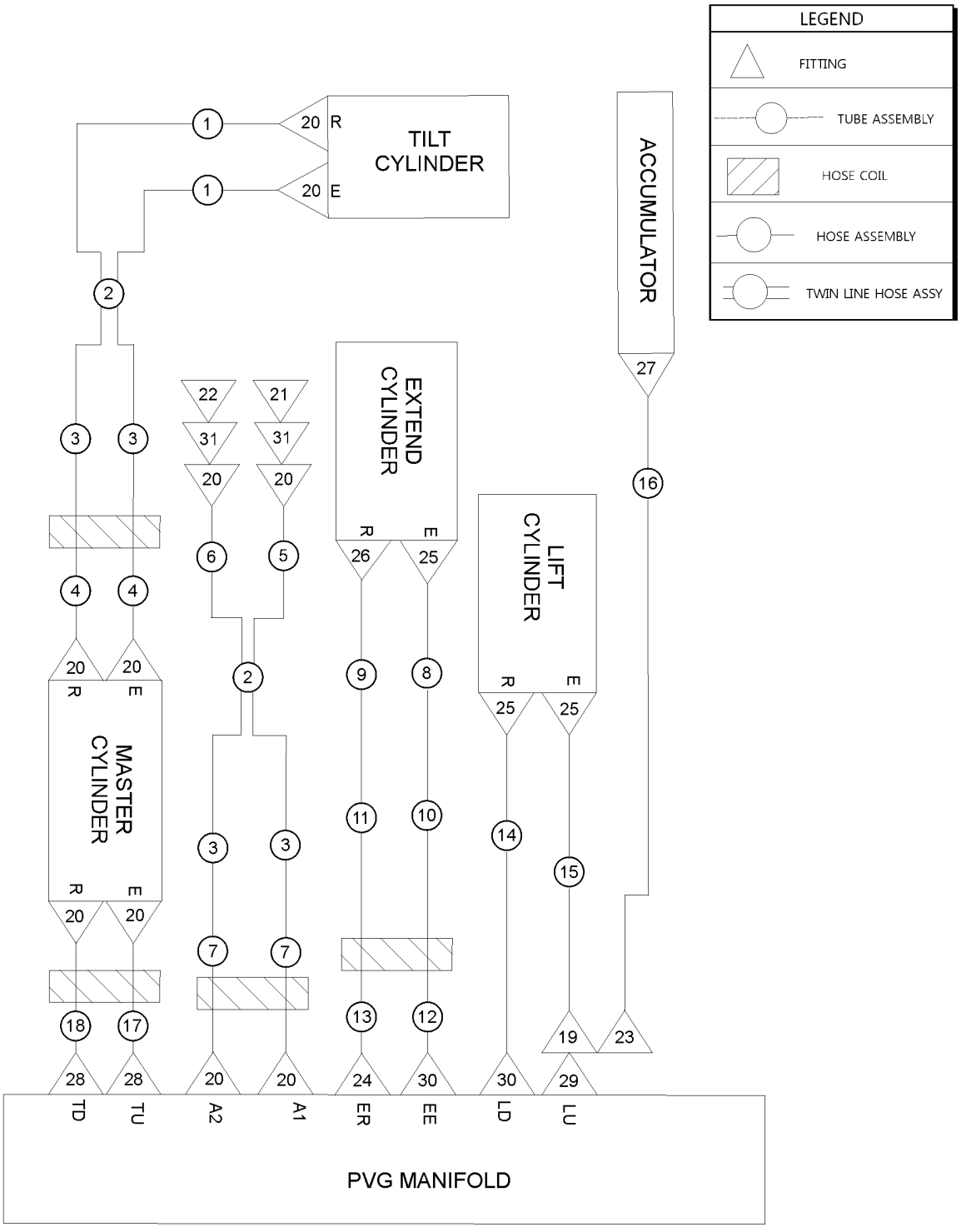

Item	*Part No.*	*Description*	*Qty.*
29	1291614GT	ELBOW,45D,520320,-12-10	1
30	48975GT	CONN,520120-12-10	2
31	75042GT	ELBOW,BULKHEAD UNION 520701-8	2

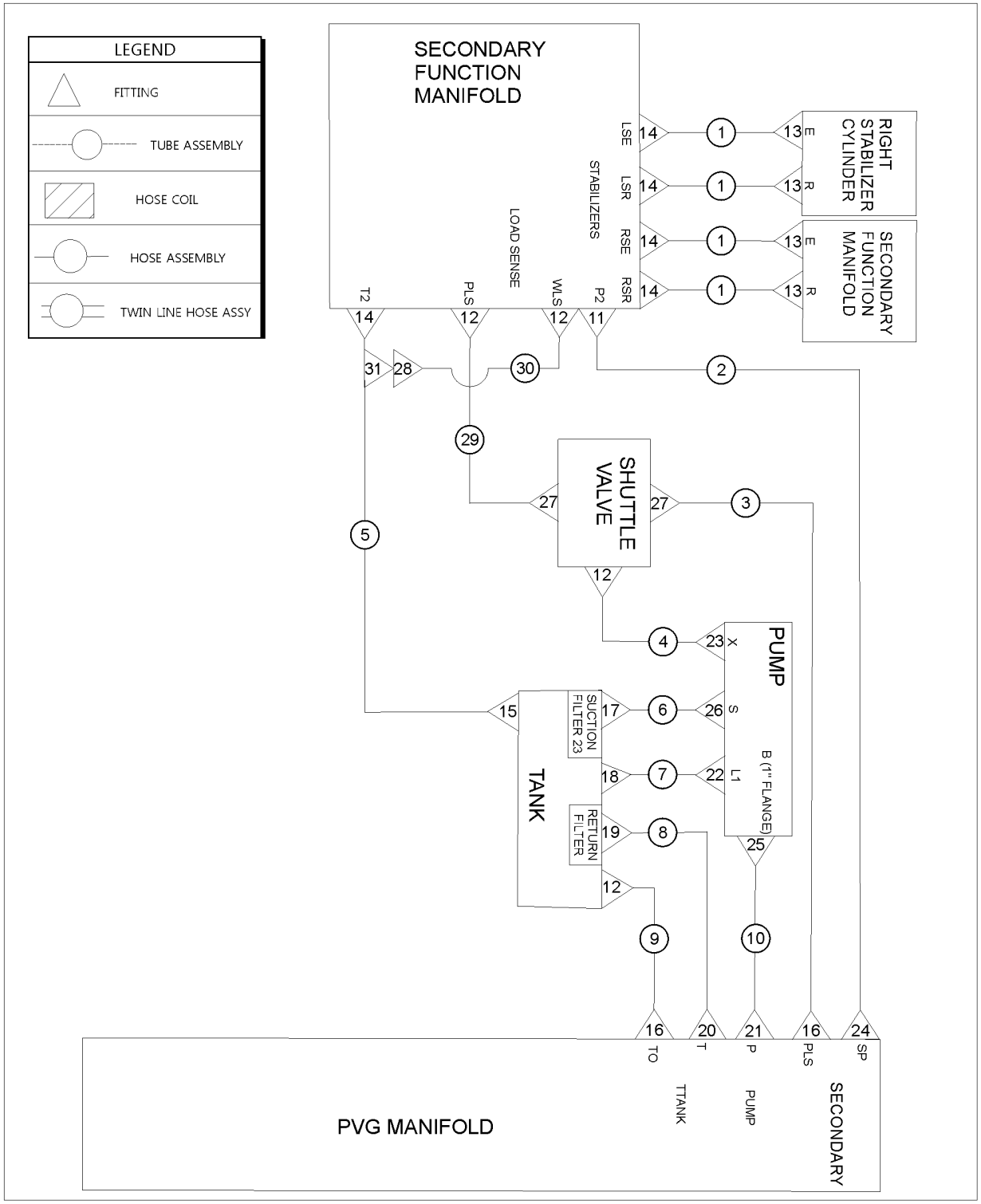
LEGEND
FITTING
TUBE ASSEMBLY
HOSE COIL
HOSE ASSEMBLY
TWIN LINE HOSE ASSY
SECONDARY FUNCTION MANIFOLD
LSE
LSR
RSE
RSR
STABILIZERS
LOAD SENSE
T2
PLS
WLS
P2
RIGHT STABILIZER CYLINDER
SECONDARY FUNCTION MANIFOLD
SHUTTLE VALVE
PUMP
X
S
L1
B (1" FLANGE)
TANK
SUCTION FILTER 23
RETURN FILTER
PVG MANIFOLD
TO
T
P
PLS
SP
TTANK
PUMP
SECONDARY

Item	Part No.	Description	Qty.
1	49130-9500GT	ASSY, HOSE, HYD, -6, 3000, STR, STR	4
2	49183-14800GT	HOSE ASSY,1/2,STR FEM,STR FEM	1
3	49117-16800GT	ASSY, HOSE, HYD, -4, 3250, 90, STR	1
4	49119-5200GT	ASSY, HOSE, HYD, -4, 3250, STR, STR	1
5	49130-5500GT	HOSE ASSY 3/8, STR FEM,STR FEM	1
6	1291200-6800GT	ASSY, HOSE, HYD, -32, 100, STR, 90 120hp	1
6B	1302855-6900GT	ASSY,HOSE,HYD,-24,150,STR,90L 74 hp	1
7	49183-7800GT	HOSE ASSY,1/2,STR FEM,STR FEM	1
8	1290344-8300GT	ASSY, HOSE, HYD, -16, 250, STR, 90	1
9	49117-8035GT	ASSY, HOSE, HYD, -4, 3250, STR, 90	1
10	1295422-17900GT	ASSY,HOSE,HYD,-16,3100,STR,90D FL 120hp	1
10B	1296632-17900GT	ASSY,HOSE,HYD,-16,3000,STR, 90 74 hp	1
11	1276989GT	ELBOW,45D , 520320-8-6	1
12	48912GT	CONN,520120-4-6***	4
13	48915GT	ELBOW,90D,520220-6	4
14	48920GT	ELBOW,45D,520320-6	5
15	48916GT	CONN, 520120-6	1
16	1283758GT	CONN,520120-4-5	2
17	1295383GT	ELBOW,45,-32 JIC, -32ORB 120hp	1
17B	88354GT	ELBOW,45D,520320-24 74 hp	1
18	48933GT	CONN,520120-8***	1
19	48984GT	CONN, 520120-16	1
20	49519GT	CONN,520120-16-12	1
21	48985GT	ELBOW,45D,520320-16	1
22	54283GT	ELBOW,90D,520220-8-10 120hp	1
22B	48947GT	ELBOW,90D,520220-8-12 74 hp	1
23	48904GT	ELBOW, 90D, 520220-4	1
24	48947GT	ELBOW,90D,520220-8-12	1

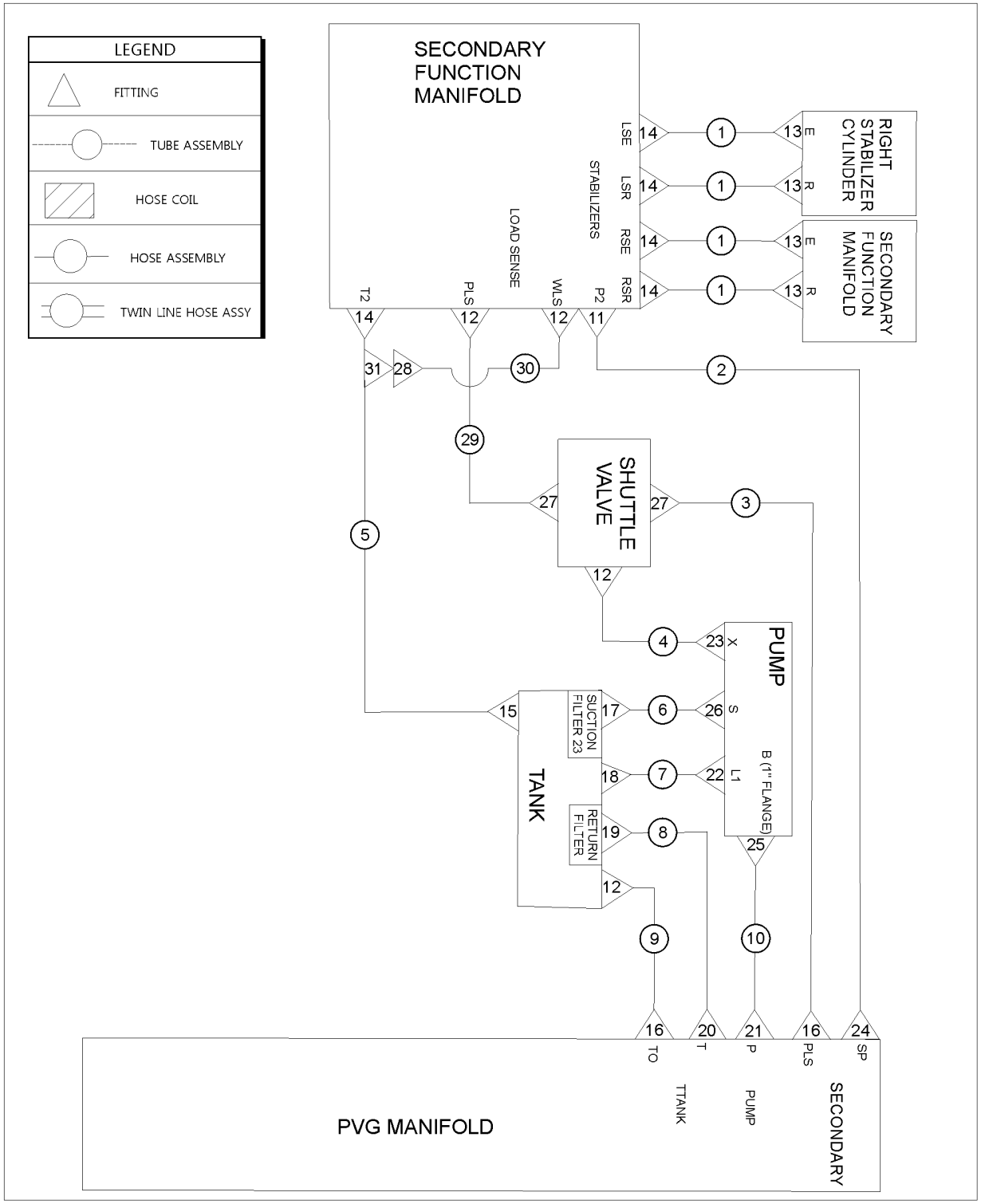
LEGEND
FITTING
TUBE ASSEMBLY
HOSE COIL
HOSE ASSEMBLY
TWIN LINE HOSE ASSY
SECONDARY FUNCTION MANIFOLD
LOAD SENSE
STABILIZERS
LSE
LSR
RSE
RSR
T2
PLS
WLS
P2
RIGHT STABILIZER CYLINDER
SECONDARY FUNCTION MANIFOLD
SHUTTLE VALVE
PUMP
TANK
SUCTION FILTER 23
RETURN FILTER
B (1" FLANGE)
PVG MANIFOLD
TO
T
P
PLS
SP
TTANK
PUMP
SECONDARY

Item	Part No.	Description	Qty.
25	48983GT	ELBOW,90D,520220-16 74 hp	1
26	123153GT	SPLIT FLANGE KIT, 2 IN.	1
27	48911GT	ELBOW,90D,520220-4-6***	2
28	48913GT	CONN,520120-12-16	1
29	49119-3000	ASSY, HOSE, HYD, -4, 3250, STR, STR	1
30	49120-3000	ASSY, HOSE, HYD, -4, 3250, STR, STR	1
31	48875GT	TEE,RUN,SWIVEL,520432-6	4

804.1 Secondary Function Manifold

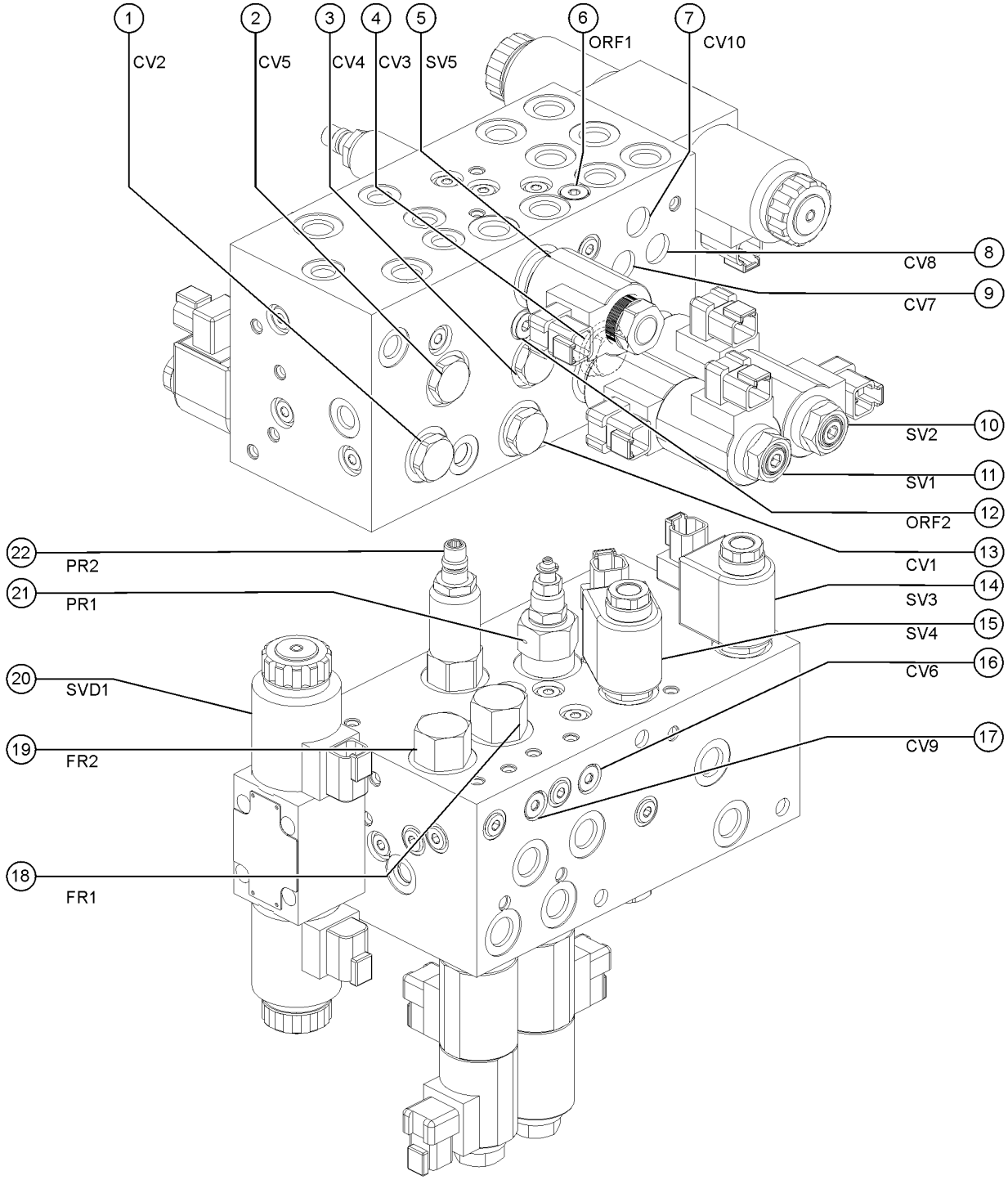

Item	Part No.	Description	Qty.
1	231037GT	CHECK VALVE,BALL TYPE,NORMAL	1
1-	74902GT	SEAL KIT, VALVE	
2	231037GT	CHECK VALVE,BALL TYPE,NORMAL	1
2-	74902GT	SEAL KIT, VALVE	
3	231037GT	CHECK VALVE,BALL TYPE,NORMAL	1
3-	74902GT	SEAL KIT, VALVE	
4	231037GT	CHECK VALVE,BALL TYPE,NORMAL	1
4-	74902GT	SEAL KIT, VALVE	
5	1286198GT	VALVE,SOLENOID,2POS 3WAY	1
5-	122657GT	SEAL KIT	
6	1286196GT	ORIFICE,1.32MM	1
7	1299129GT	CHECK VALVE, BALL TYPE,REVERSE	1
7-	1299132GT	SEAL KIT,CHECK VALVE,1299129,BUNA	
8	1299129GT	CHECK VALVE, BALL TYPE,REVERSE	1
8-	1299132GT	SEAL KIT,CHECK VALVE,1299129,BUNA	
9	1299129GT	CHECK VALVE, BALL TYPE,REVERSE	1
9-	1299132GT	SEAL KIT,CHECK VALVE,1299129,BUNA	
10	107746GT	VALVE,SOLENOID 3 POS 4 WAY	1
10-	1299134GT	SEAL KIT,3-4 VALVE,1299131	
11	107746GT	VALVE,SOLENOID 3 POS 4 WAY	1
11-	1299134GT	SEAL KIT,3-4 VALVE,1299131	
12	1286195GT	ORIFICE,1.50MM	1
13	231037GT	CHECK VALVE,BALL TYPE,NORMAL	1
13-	74902GT	SEAL KIT, VALVE	
14	161534GT	VALVE, SOLENOID, 2 POS 3 WAY	1
14-	237236GT	SEAL KIT,VALVE	
15	161534GT	VALVE, SOLENOID, 2 POS 3 WAY	1
15-	237236GT	SEAL KIT,VALVE	

804.1 Secondary Function Manifold

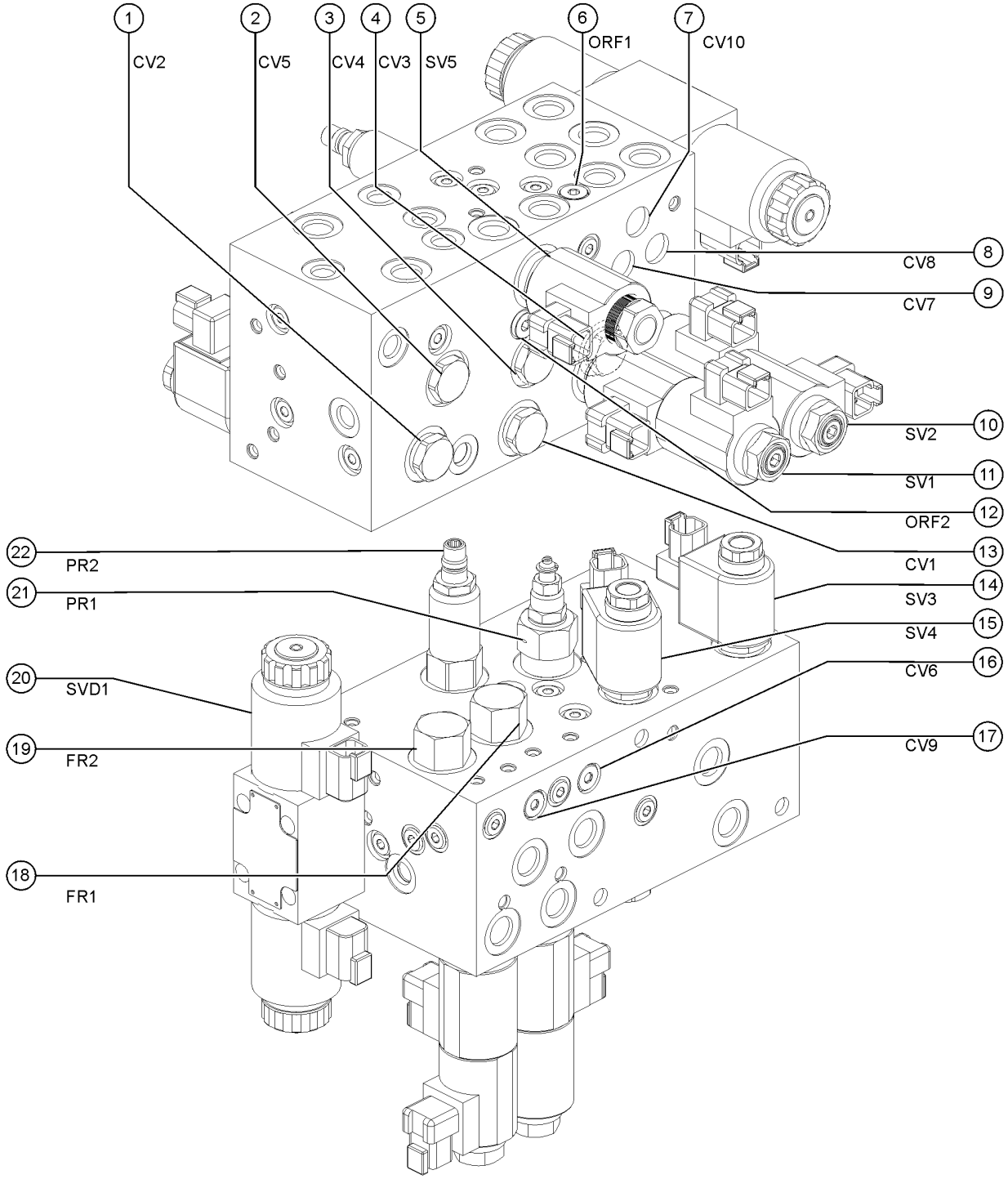

Item	Part No.	Description	Qty.
16	1299129GT	CHECK VALVE, BALL TYPE,REVERSE	1
16-	1299132GT	SEAL KIT,CHECK VALVE,1299129,BUNA	
17	1299129GT	CHECK VALVE, BALL TYPE,REVERSE	1
17-	1299132GT	SEAL KIT,CHECK VALVE,1299129,BUNA	
18	1299130GT	FLOW CONTROL,FIXED PRESSURE	1
18-	1299133GT	SEAL KIT, FLOW REDUCER,1299130	
19	1299130GT	FLOW CONTROL,FIXED PRESSURE	1
19-	1299133GT	SEAL KIT, FLOW REDUCER,1299130	
20	1286187GT	VALVE,SOLENOID,STEER SELECT	1
20-	65879GT	O-RING KIT(41769) SQ.CUT DO3	
21	1303112GT	VALVE,PRESSURE REDUCING,250PSI	1
21-	1286190GT	SEAL KIT,PR VALVE	
22	1286194GT	VALVE,PRESSURE REDUCING,50PSI	1
22-	110203GT	SEAL KIT, VALVE, #10	

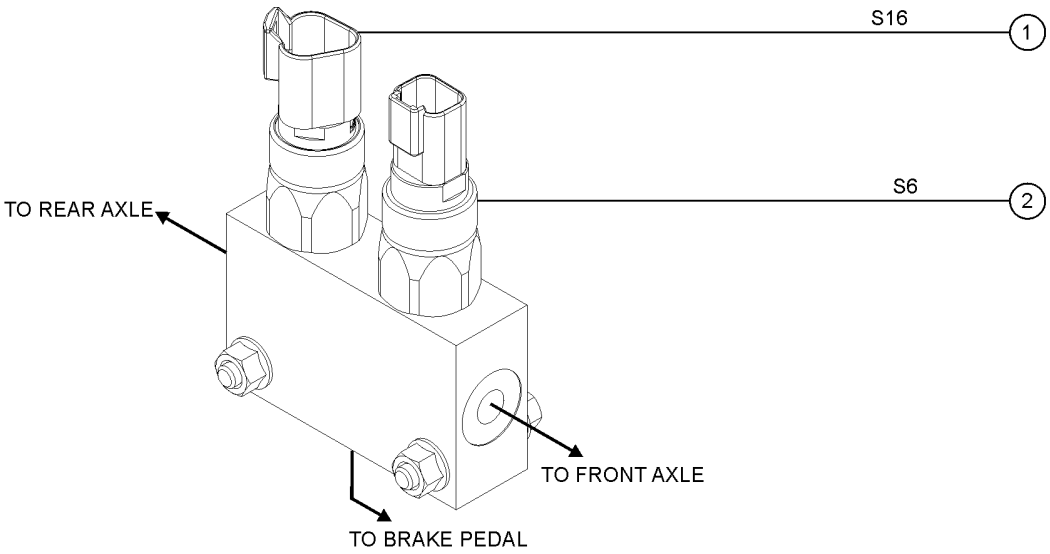
S16
1
S6
2
TO REAR AXLE
TO FRONT AXLE
TO BRAKE PEDAL

805.1 Brake Manifold

Item	Part No.	Description	Qty.
-	117655GT	MANIFOLD,BRAKE PRESSURE	
1	229977GT	SWITCH,PRESS,NO,50 PSI,04 OR (brake light switch; part of Road Light Option)	1
2	229976GT	SWITCH PRESSURE NC, 450PSI	1

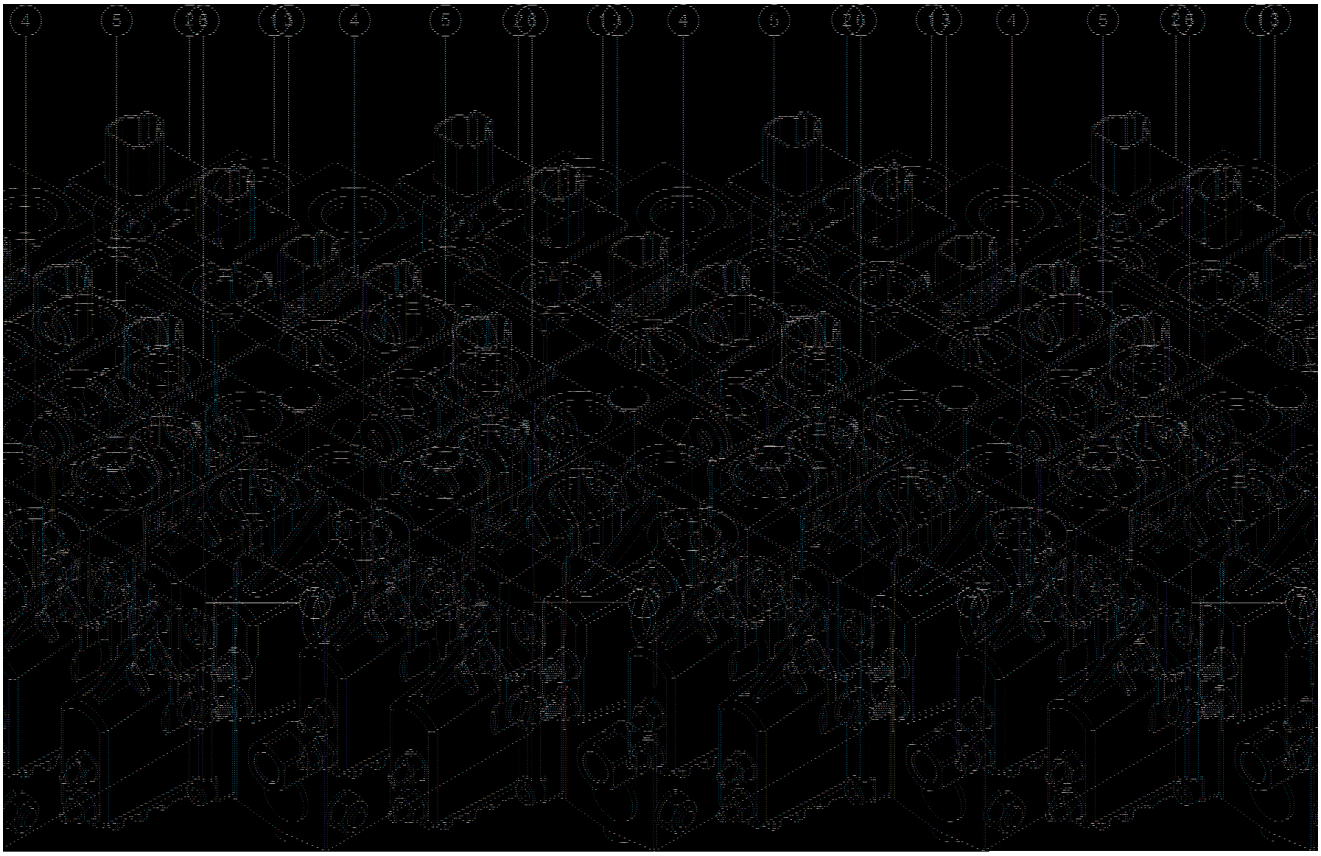
4
5
20
3
4
5
20
3
4
5
20
3
4
5
20
3

806.1 PVG Manifold

Item	Part No.	Description	Qty.
A	1302669GT	PVG,5 SECTION,PRIMARY,GTH1056	
1	1285620GT	OUTLET,PVG	
2	1304384GT	SLICE ASSEMBLY,TILT 8K/10K,PVG32 tilt function	
3	1331427GT	SLICE ASSEMBLY, LIFT 10K, PVG lift function	
4	1304380GT	SLICE ASSEMBLY,AUX,PVG16 auxiliary function	
5	1331428GT	SLICE ASSEMBLY, EXTEND 10K, PVG extend function	
6	1304366GT	SLICE ASSEMBLY,SWAY,PVG32 sway function	
7	1285619GT	INLET,PRIORITY,PVG	

901.1 Work light, Roadlight and Proximity Alarm

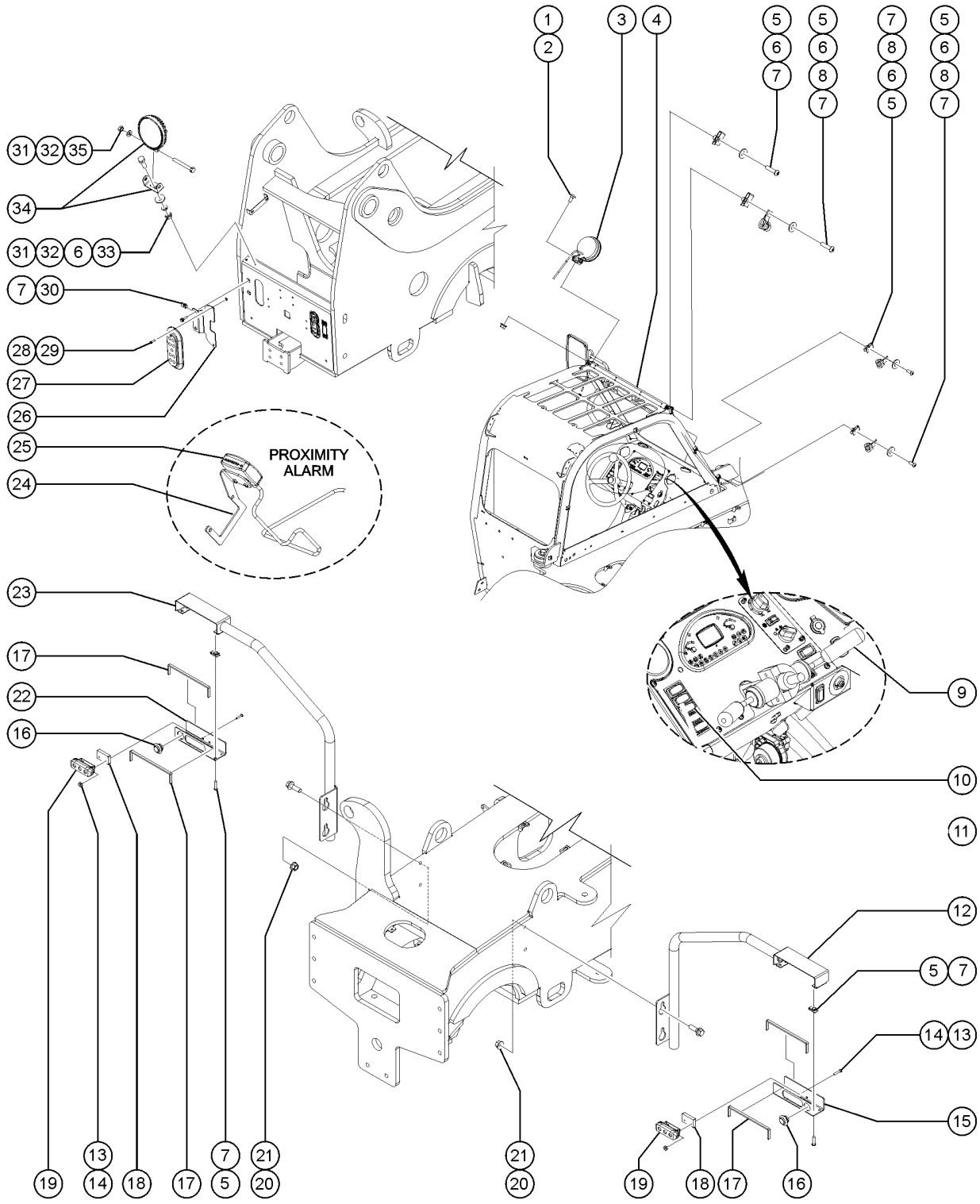

Item	Part No.	Description	Qty.
1	1257745GT	BOLT,CARRIAGE,5/16-18X.75,5,ZA	1
2	824028GT	NUT, TL FLG, 5/16-18, G, ZAG	1
3	1258527GT	HARNESS,LIGHT,LED,CLEAR,5"ROUN	1
3-	1255882GT	LIGHT,LED,CLEAR,5"ROUND 12/24V	
4	1254057GT	FORMING,LIGHT BAR	1
5	824227GT	SCREW, BHC, 1/4-20 X 1, ZAG	14
6	824113GT	WASHER,FLAT,USS,1/4,ZAG	6
7	56912GT	SPRING CLIP,1/4-20,.025-.15X.54,ZAG	18
8	124728GT	CLAMP,0.44,#7X1/4,RUB CUSH	3
9	7-125-06GT	SWITCH, TURN SIGNAL	1
9-	1256922GT	SCREW,PHPM,10-32X2.25,ZAG	2
9-	824032GT	NUT, TL FLG, 10-32, F, ZAG no longer available, replaced by 1283005GT	2
9-	1283005GT	NUT,NYLOCK FLG,10-32,A,ZAG	2
10	236348GT	SWITCH, LIGHTS	1
11	1255735GT	SWITCH, BOOM LIGHTS	1
12	1254569GT	WELDMENT,MOUNT,ENG,ROAD LIGHT no longer available, replaced by 1262372GT	1
12B	1262372GT	WELDMENT,MOUNT,ROAD LIGHT	1
13	1257047GT	SCREW,BHS,10-32X1,F835,ZAG	4
14	1256804GT	NUT,10-32,ZAG	4
15	1254564GT	FORMING,COVER,CAB,ROAD LIGHT	1
16	1255647GT	HARNESS,LIGHT,TURN SIGNAL,AMBR	2
17	69773GT	SEAL,RIBBED FOAM,3/8X1/8 PSA**	4
18	1258715GT	SPACER,LIGHT MOUNT,.500"	2
19	1253241GT	HARNESS,LIGHT,DRIVE,CLEAR,3LED	2
20	1253319GT	NUT,TL FLG,5/8-11,G,ZAG no longer available	4
21	1256126GT	SCREW,HHF,5/8-11X2,8,ZAG no longer available	4
22	1254565GT	FORMING,COVER,ENG,ROAD LIGHT	1
23	1254568GT	WELDMENT,MOUNT,CAB,ROAD LIGHT no longer available, replaced by 1262372GT	1

901.1 Work light, Roadlight and Proximity Alarm

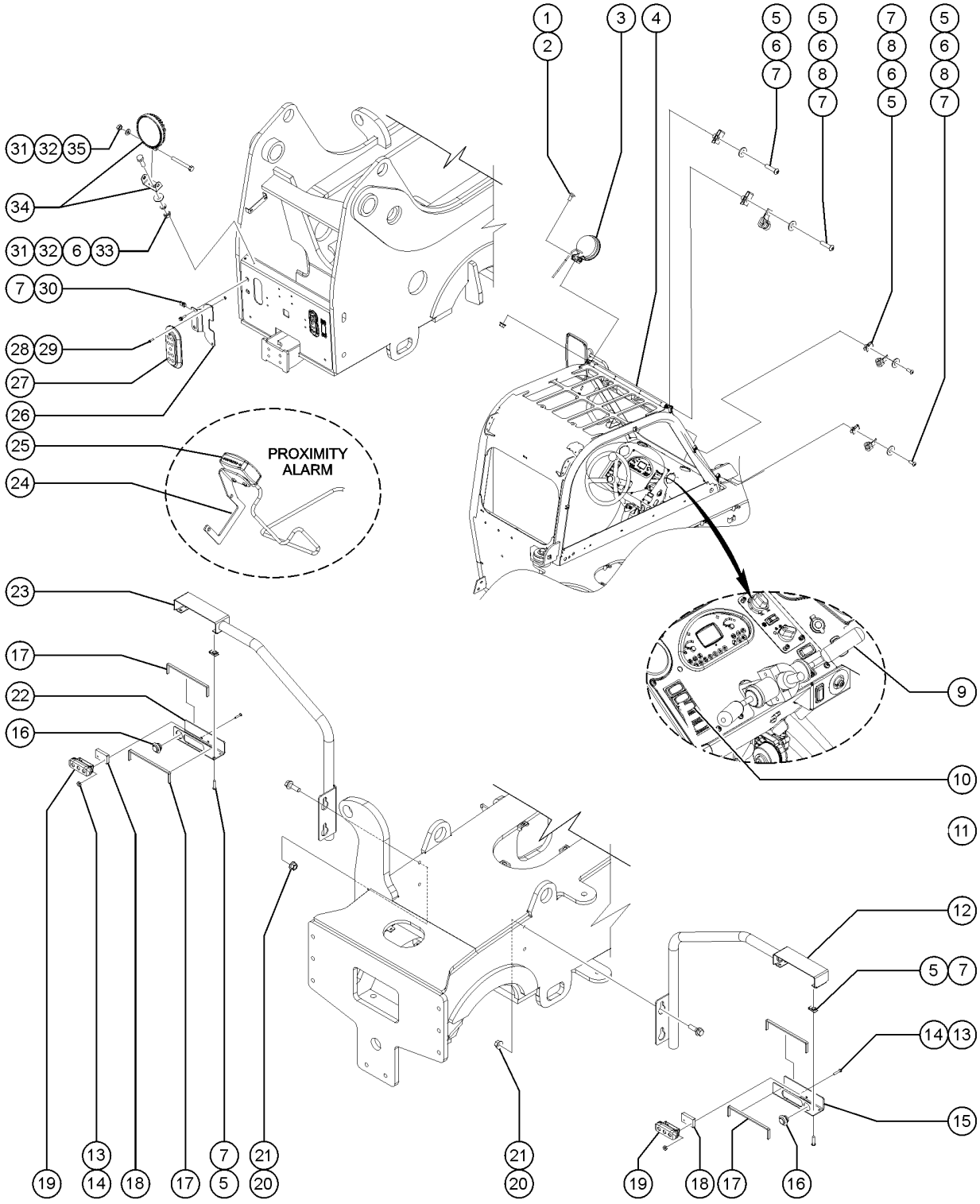

Item	Part No.	Description	Qty.
23B	1262372GT	WELDMENT,MOUNT,ROAD LIGHT	1
24	1258105GT	FORMING, DISPLAY MOUNT	1
25	1257989GT	COMPONENTS, REAR PROXIMITY ALA	1
26	1278702GT	FORMING,BRACKET,LED TAIL LIGHT	2
27	229677GT	HARNESS, TAILLIGHT LED	2
28	824215GT	SCREW, PHPM, 10-32 X .75, ZAG	4
29	824032GT	NUT, TL FLG, 10-32, F, ZAG	4
30	824079GT	SCREW,HHF,1/4-20X1,8,ZAG	4
31	22571GT	NUT,HEX,M8 X 1.25	2
32	49408GT	WASHER, LOCK, M8	2
33	49379GT	SCREW,HHC,M8 X 1.25 X 25	1
34	237934GT	HARNESS, BACKUP LIGHT	1
34-	215481GT	LIGHT, LED WHITE 12V	
35	75185GT	SCREW,HHC,M8X1.25X 70MM,GR8.8	1

902.1 Air Conditionong Assembly - Belt Driven

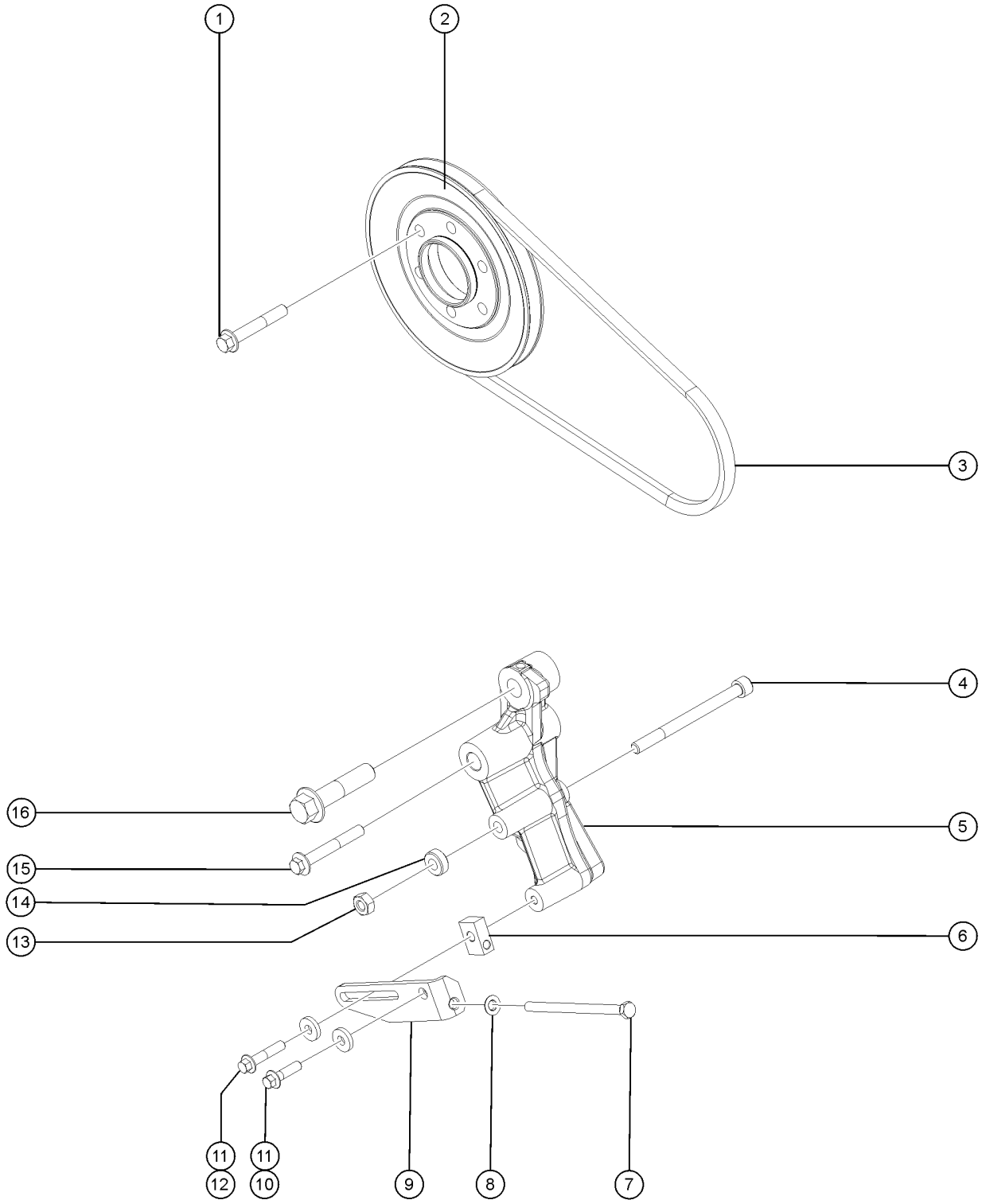

Item	Part No.	Description	Qty.
1	215071GT	BOLT, HEX, FLANGE, 10MM X 65MM	6
2	215755GT	PULLEY, A/C COMPRSR, DEUTZ3.6	1
3	215757GT	BELT, A/C, DEUTZ TCD3.6	1
4	216068GT	SCREW, SHC, 10MM X 125MM	1
5	1270666GT	BRACKET,AC,DEUTZ 3.6,8K	1
6	216078GT	THREADED PIECE, DEUTZ, A/C	1
7	216073GT	BOLT, HEX, 8MMX130MM	1
8	216070GT	WASHER, 8MM, DOMED	1
9	216069GT	CLAMPING STRAP, A/C, DEUTZ3.6	1
10	216074GT	BOLF, HEX, FLANGE, 8MM X 30MM	1
11	216077GT	WASHER, 8MM, PLAIN	2
12	216075GT	BOLT, HEX, FLANGE, 8MMX40MM	1
13	216076GT	NUT, HEX, 10MM, DEUTZ A/C	1
14	216067GT	BUSHING, 10MM X 8.5MM	1
15	1271035GT	BOLT,HHF,M16 X 120MM,10.9,DTZ	1
16	216072GT	BOLT, HEX, FLANGE, 16MMX70MM	1

903.1 HVAC Hose and Fittings

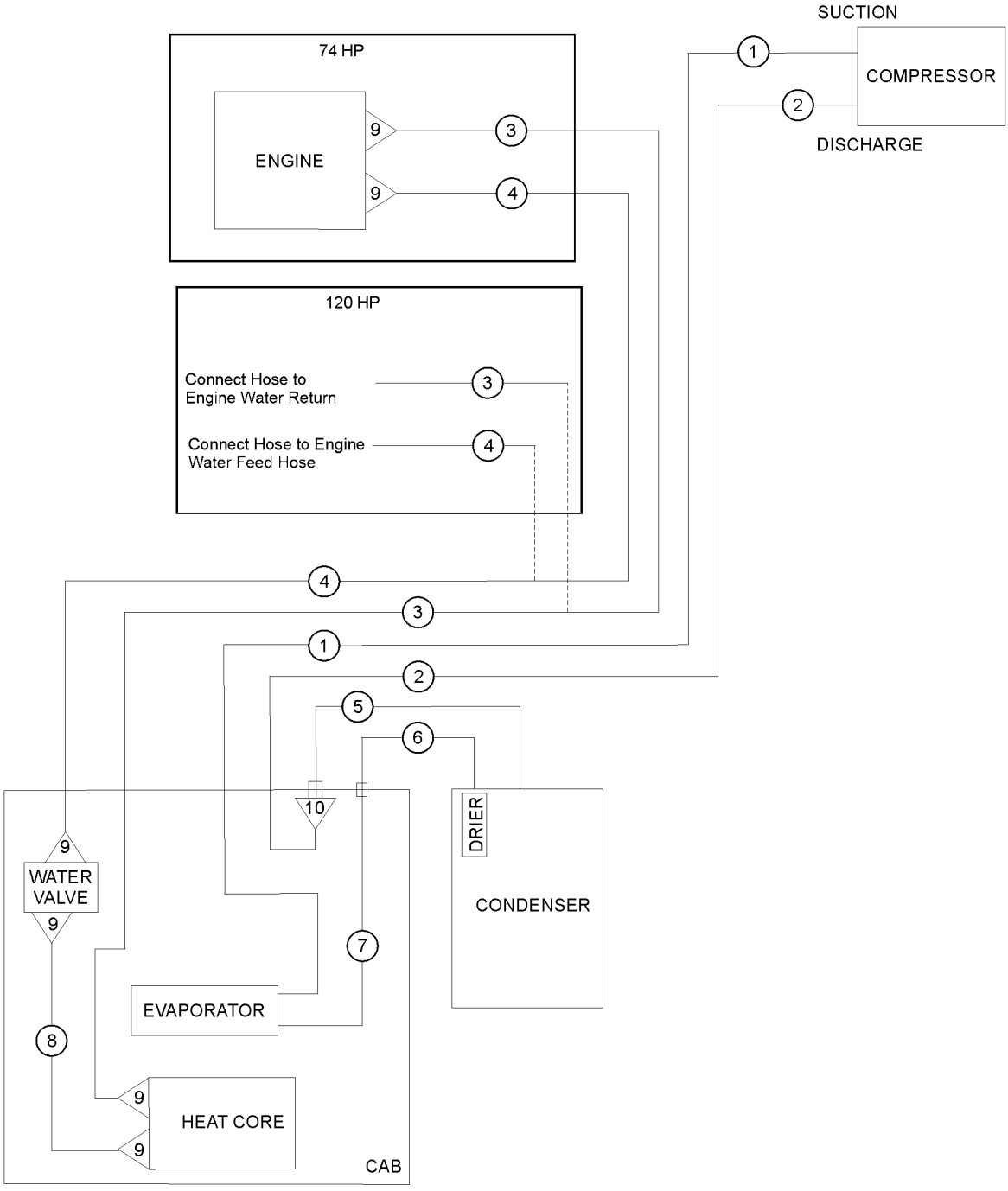

Item	Part No.	Description	Qty.
-	1268168GT	WRAP,FIBERGLASS,HEAT RESISTANT,4 FT	2
-	1304463GT	KIT, REFRIGERANT HOSES, 1056	1
1	1304423GT	HOSE,REFRIG,#10, COMP-TVX, 1056	1
2	1304422GT	HOSE,REFRIG,#8, COMP- BULKHEAD, 1056	1
3	1702GT	HOSE-HEATER,5/8 ID-BLACK	1
4	1702GT	HOSE-HEATER,5/8 ID-BLACK	1
5	1299947GT	HOSE, REFRIG, #8, COND-BULKHEAD	1
6	1299948GT	HOSE, REFRIG, #8, DRIER-BULKHEAD	1
7	1299949GT	HOSE, REFRIG, #8, BULKHEAD-TXV	1
8	1702GT	HOSE-HEATER,5/8 ID-BLACK	1
9	46131GT	CLAMP,HOSE,.63" - 1.0" X .5"	
10	1299953GT	FITTING, REFRIG, #8, 90	1

904.1 Heater/AC Blower Installation, View-1

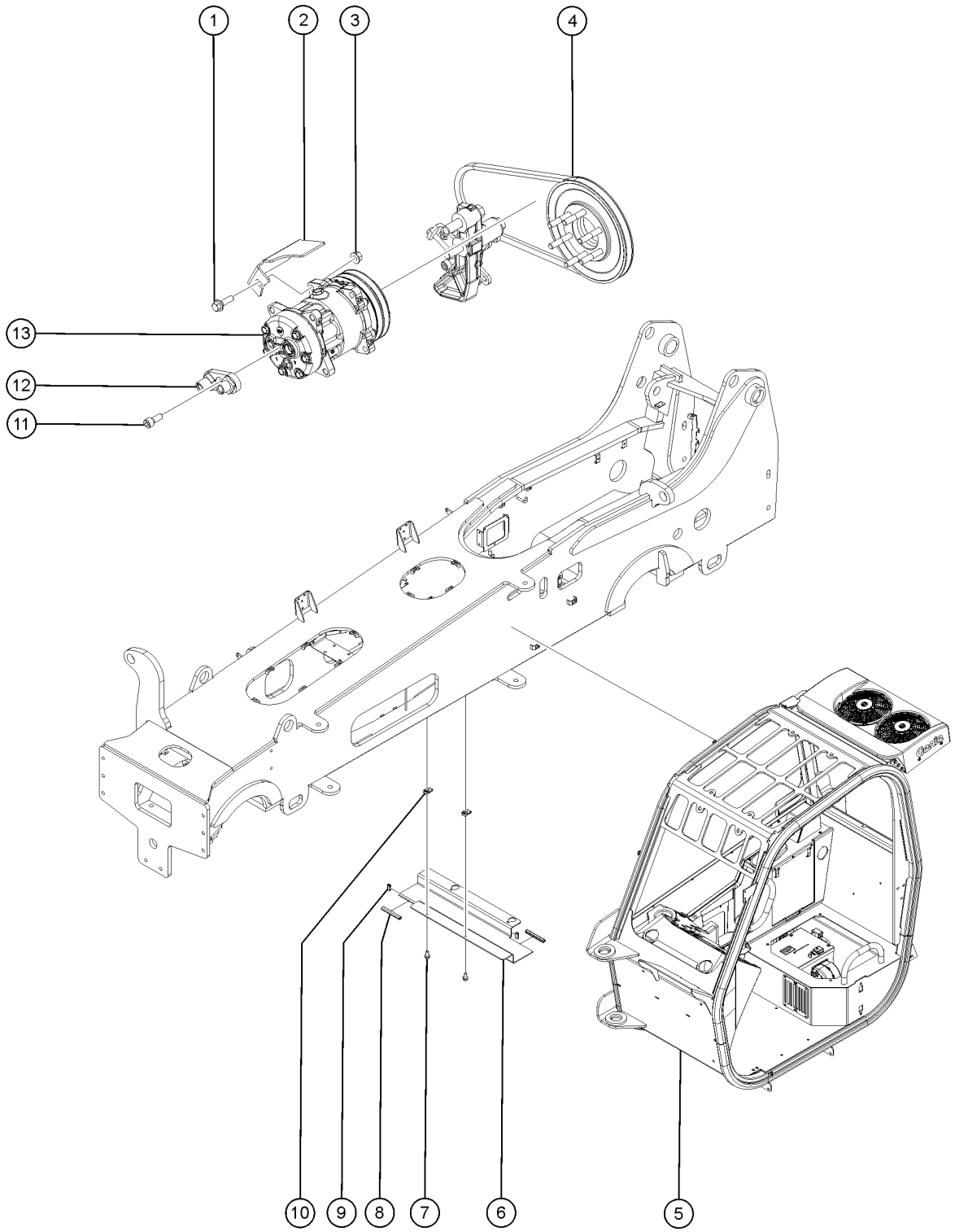

904.1 Heater/AC Blower Installation, View-1

Item	*Part No.*	*Description*	*Qty.*
1	824091GT	SCREW, HHF, 3/8-16 X 1.25, 8, ZAG	1
2	1269272GT	FORMING,AC COMP GUARD,854/TCD	1
3	1274322GT	NUT,NYLOCK FLG,3/8-16,F,ZAG	1
4		Ref. KIT, A/C, DEUTZ TCD3.6 Refer to 902.1	1
5		Ref. ASSEMBLY, HVAC, CAB Refer to 905.1	1
6	1254459GT	FORMING,HOSE COVER,HEAT/AC	1
7	824089GT	SCREW, HHF, 3/8-16 X .75, 8, ZAG	2
8	46718GT	TRIMLOCK,BLACK,3/16	2
9	46718GT	TRIMLOCK,BLACK,3/16	2
10	29868GT	SPRING CLIP,3/8-16,.05-.20X.73,ZAG	2
11	1299919GT	SCREW,SHC,M10-1.5X25,DIN912,12.9,ZAB	1
12	1299918GT	MANIFOLD, AIR CONDITIONING	1
13	1299917GT	COMPRESSOR, AIR CONDITIONING	1

905.1 Heater/AC Blower Installation, View-2

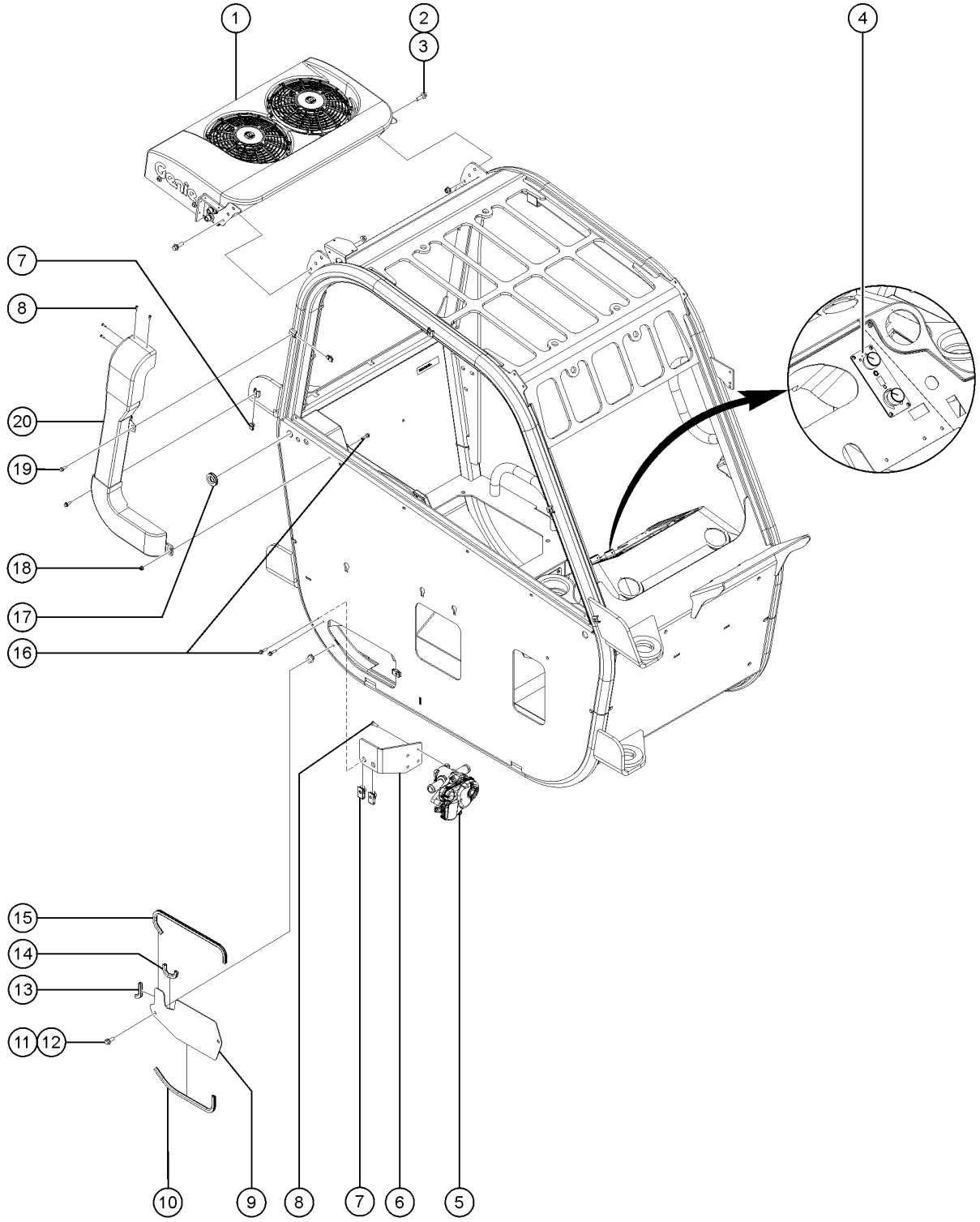

905.1 Heater/AC Blower Installation, View-2

Item	Part No.	Description	Qty.
1	1291686GT	ASSEMBLY,CONDENSER,REMOTE	1
2	824091GT	SCREW, HHF, 3/8-16 X 1.25, 8, ZAG	6
3	1274322GT	NUT,NYLOCK FLG,3/8-16,F,ZAG	6
4	1297983GT	ASSEMBLY, CONTROLLER, HVAC	1
5	1299876GT	VALVE, WATER, HEATER	1
6	1299879GT	FORMING, WATER VALVE	1
7	56912GT	SPRING CLIP,1/4-20,.025-.15X.54,ZAG	4
8	1257296GT	SCREW,PHPM-ST,8-32X.50,TYPE F,ZAG	8
9	1299881GT	COVER, CAB, HVAC	1
10	46718GT	TRIMLOCK,BLACK,3/16	1
11	824090GT	SCREW,HHF,3/8-16X1,8,ZAG	2
12	29868GT	SPRING CLIP,3/8-16,.05-.20X.73,ZAG	2
13	46718GT	TRIMLOCK,BLACK,3/16	1
14	46718GT	TRIMLOCK,BLACK,3/16	1
15	46718GT	TRIMLOCK,BLACK,3/16	1
16	824079GT	SCREW,HHF,1/4-20X1,8,ZAG	3
17	46718GT	TRIMLOCK,BLACK,3/16	1
18	1277924GT	NUT,NYLOCK FLG,1/4-20,F,ZAG	1
19	824078GT	SCREW,HHF,1/4-20X.75,8,ZAG	2
20	1300072GT	ASSEMBLY, CAB HOSE COVER	1

906.1 Heater/AC Blower Installation, View-3

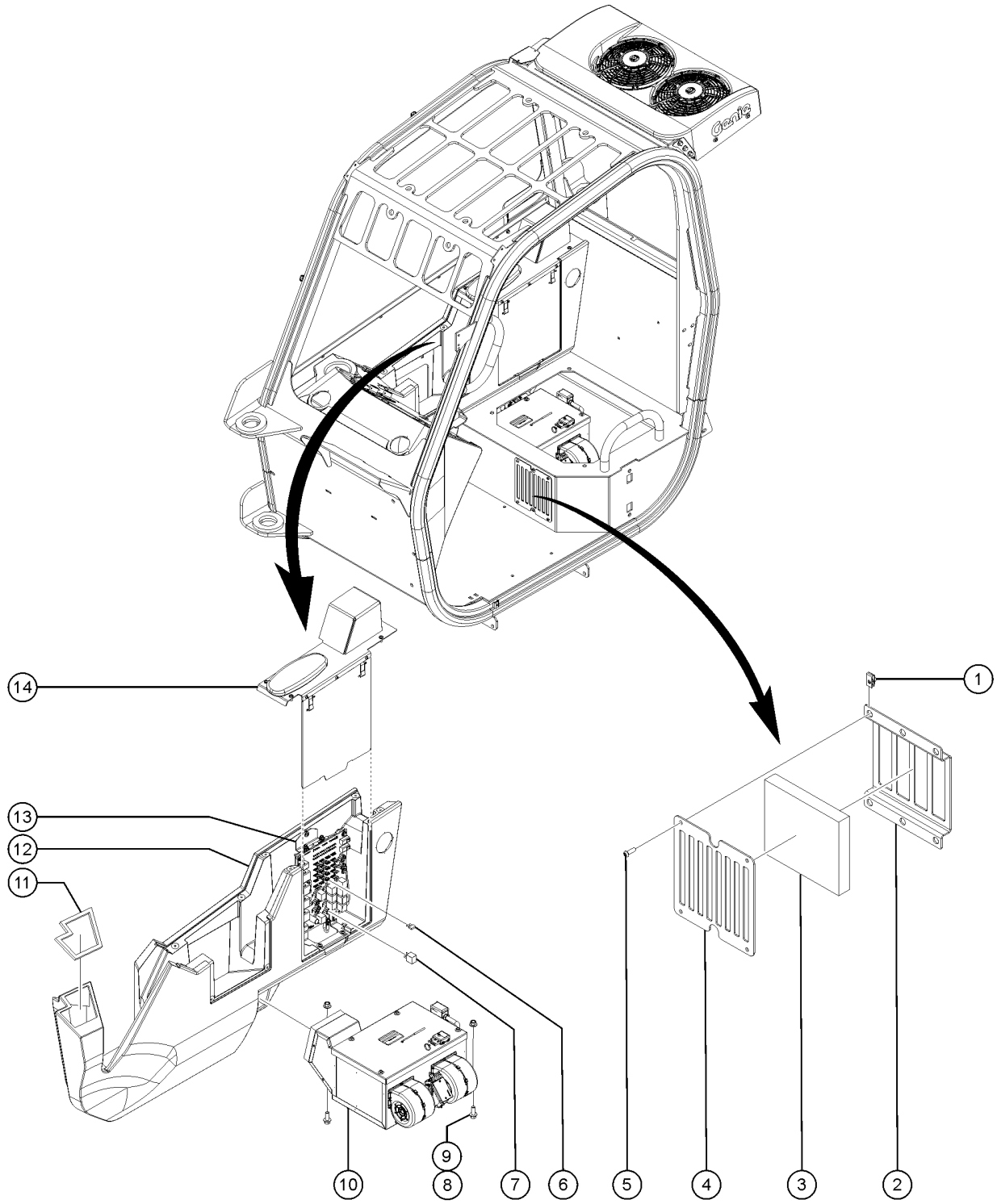

906.1 Heater/AC Blower Installation, View-3

Item	Part No.	Description	Qty.
1	56912GT	SPRING CLIP,1/4-20,.025-.15X.54,ZAG	6
2	1299859GT	FORMING, CAB FILTER MOUNT	1
3	1299858GT	FILTER, CAB AIR	1
4	1299860GT	FORMING, CAB FILTER COVER	1
5	1278088GT	SCREW,BHC,TORX PLUS, 1/4-20X3/4,F835,ZAG	6
6	34052GT	RELAY,SPDT,12V(AUTO) PLUG IN**	1
7	36206GT	FUSE,25 AMP,ATC	1
8	824090GT	SCREW,HHF,3/8-16X1,8,ZAG	2
9	1274322GT	NUT,NYLOCK FLG,3/8-16,F,ZAG	2
10	1297984GT	ASSEMBLY,HVAC BLOWER	1
10-	1313383GT	GASKET KIT, HEATER-AC, GTH 1056 FOR HEATER-AC OPTION	1
11	42726GT	WEATHER STRIPPING,1/2"X3/8 THK	1
12	1298547GT	COVER, SIDE CONSOLE	1
13	230004GT	ASSY, PCB BOARD	1
14	1297982GT	ASSEMBLY, SIDE CONSOLE, HVAC	1

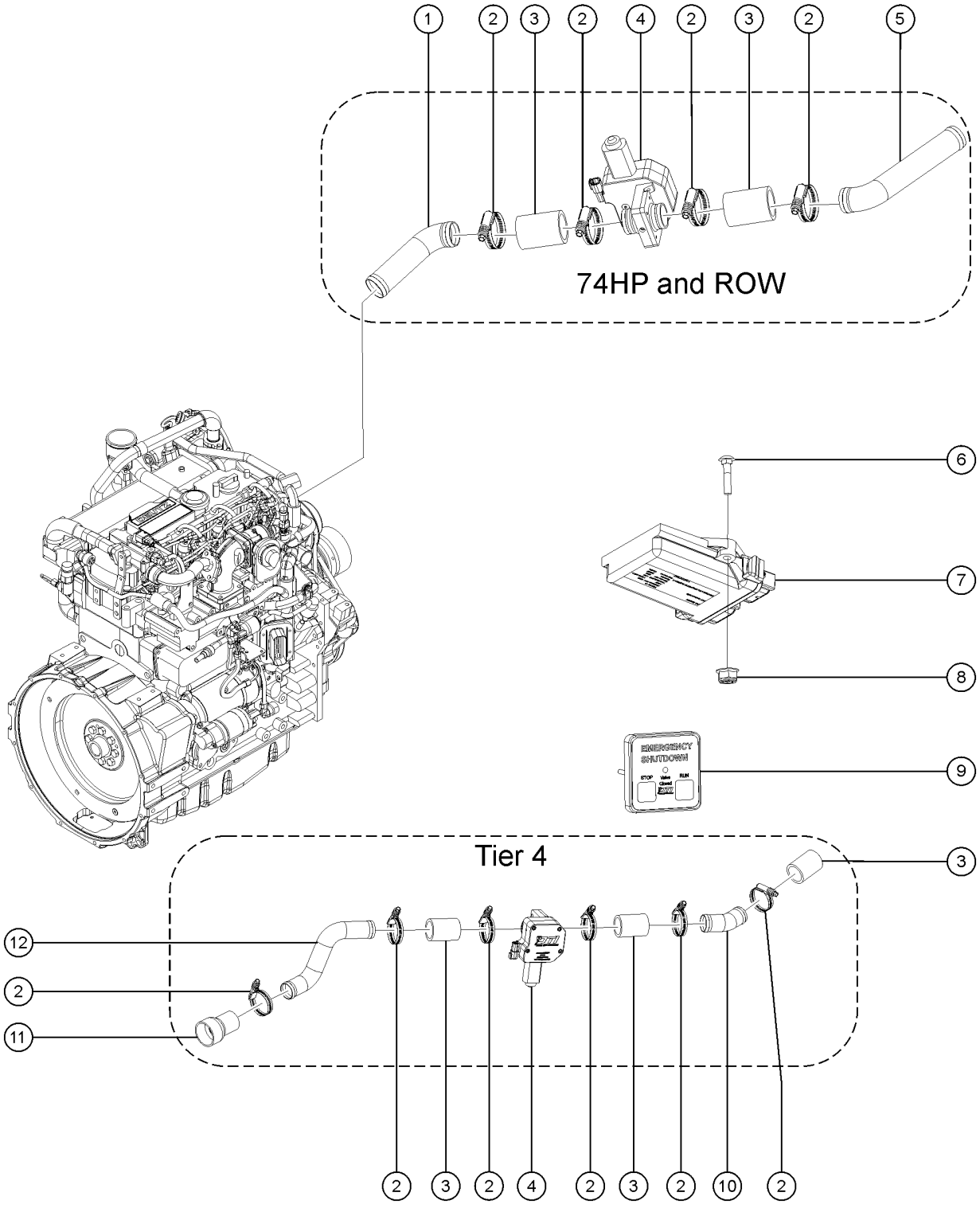
1
2
3
2
4
2
3
2
5
74HP and ROW
6
7
8
EMERGENCY SHUTDOWN
STOP
RUN
9
Tier 4
3
12
2
11
2
3
2
4
2
3
2
10
2

Item	Part No.	Description	Qty.
-	1294157GT	ASSEMBLY,PASS,3.6 74HP AND ROW (74HP and ROW)	1
-	1289722GT	ASSEMBLY,PASS,10K T4F (Tier 4)	1
-	1293850GT	SET,ELECTRONICS,PASS,GTH includes items 7 & 9	
-	1293818GT	HARNESS,UNIVERSAL,PASS (part of 1293850)	
-	1291079GT	PLUG,PLASTIC,.250,BLK,LOPRO,DULL (without PASS option)	3
1	1289416GT	PIPE,INLET,POST PASS,3.6	1
2	215216GT	CLAMP,HOSE,CT,SAE 262,1-3/4" TO 2-5/8" (74HP and ROW)	4
2B	215216GT	CLAMP,HOSE,CT,SAE 262,1-3/4" TO 2-5/8" (Tier 4)	6
3	1294154GT	HOSE,SILICONE,1.75"ID X 3" (74HP and ROW)	2
3B	1294154GT	HOSE,SILICONE,1.75"ID X 3" (Tier 4)	3
4	1289578GT	VALVE,SHUTOFF,1.75 X 1.75	1
5	1289415GT	PIPE,CAC OUTLET,3.6 PASS	1
6	1256463GT	BOLT,CARRIAGE,1/4-20X1.25,5,ZAG	2
7	1291573GT	CONTROLLER, VCU, DEUTZ 2.9	1
8	1277924GT	NUT,NYLOCK FLG,1/4-20,F,ZAG	2
9	1294030GT	HARNESS,CONTROL PANEL,PASS	1
10	1289617GT	PIPE,CAC OUTLET,3.6, T4F PASS	1
11	1289659GT	COUPLER,INLET,T4F,PASS	1
12	1289657GT	PIPE,INLET,POST PASS,3.6 T4F	1

908.1 Telematics Option

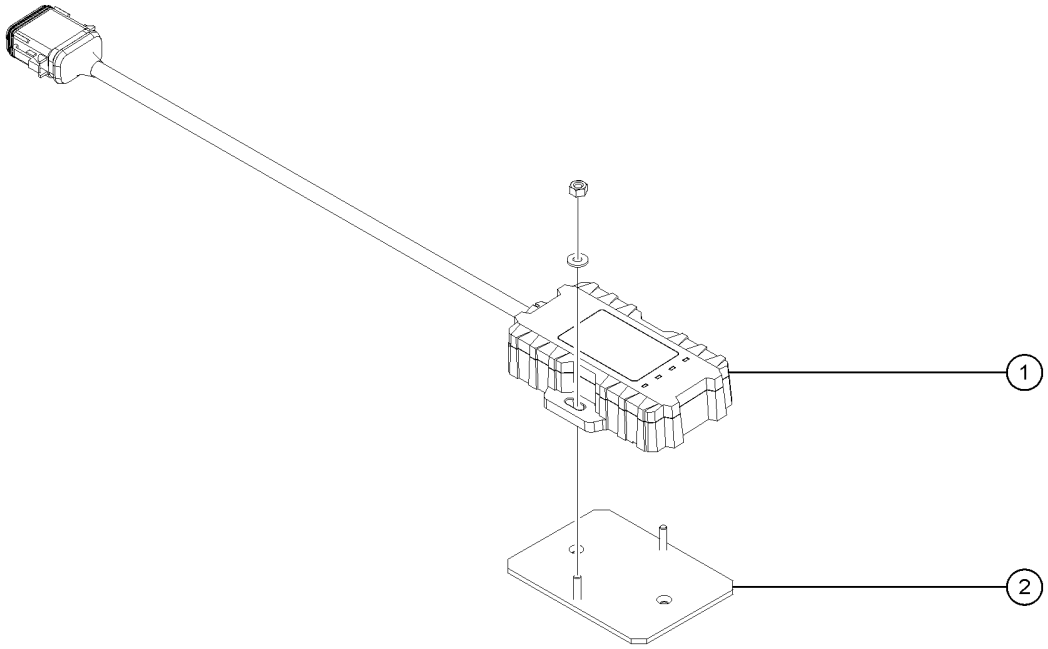

Item	*Part No.*	*Description*	*Qty.*
1	1289520GT	MODULE, TELEMATICS, ZTR, M7, NORTH AMERICA North America	1
2	1289561GT	BRACKET, TELEMATICS	1

909.1 Access Manager Option (from SN GTH10E-16283)

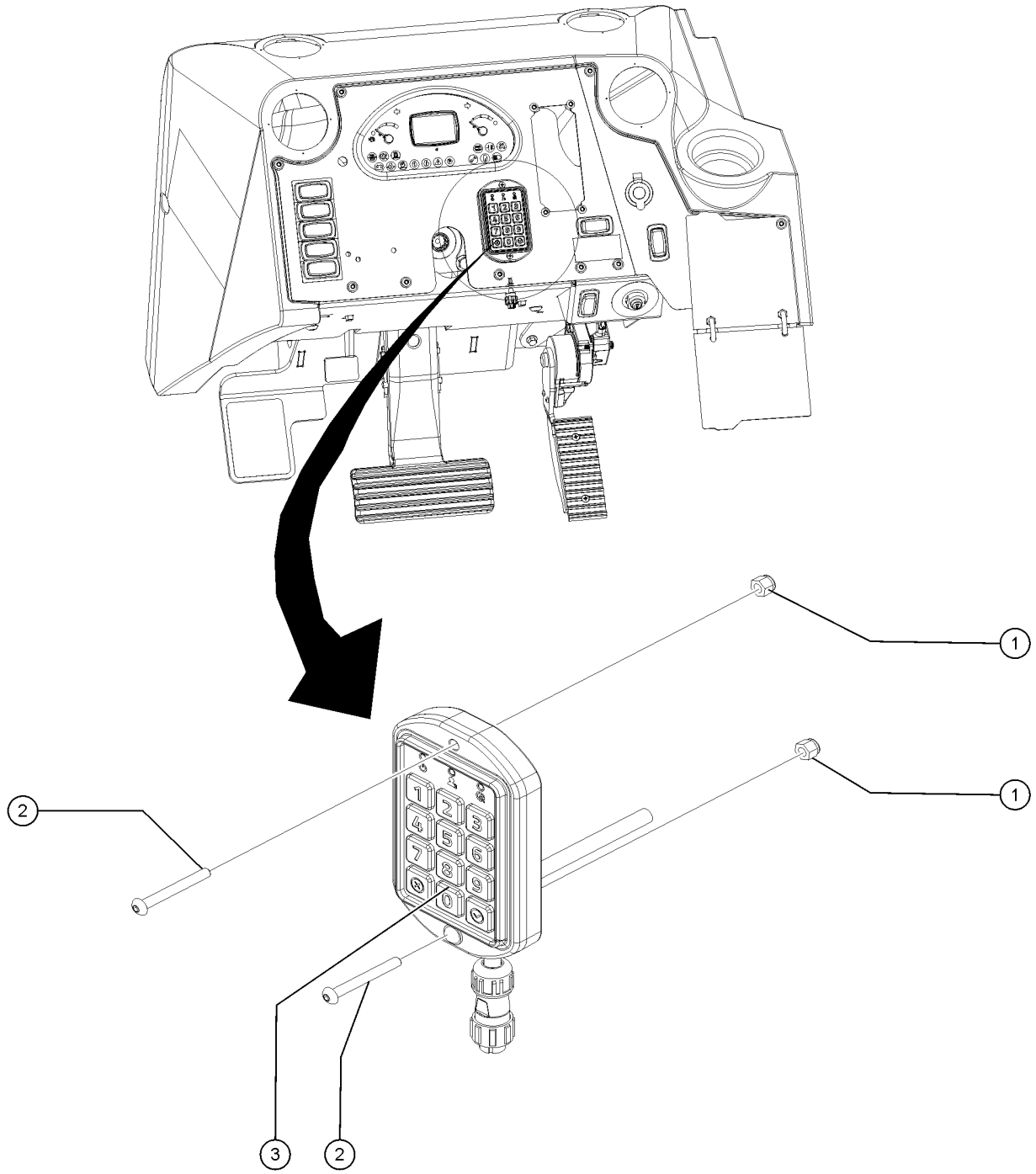

909.1 Access Manager Option (from SN GTH10E-16283)

Item	*Part No.*	*Description*	*Qty.*
-	1296897GT	HARNESS, ACCESS MANAGEMENT, 164"	1
1	1263070GT	NUT,SERRATED,8-32,ZAG	2
2	1258189GT	SCREW,PHPM,8-32X1,ZAG	2
3	1296895GT	KEYPAD, ACCESS MANAGEMENT, LIFT CONNECT	1

910.1 Backup Camera Option

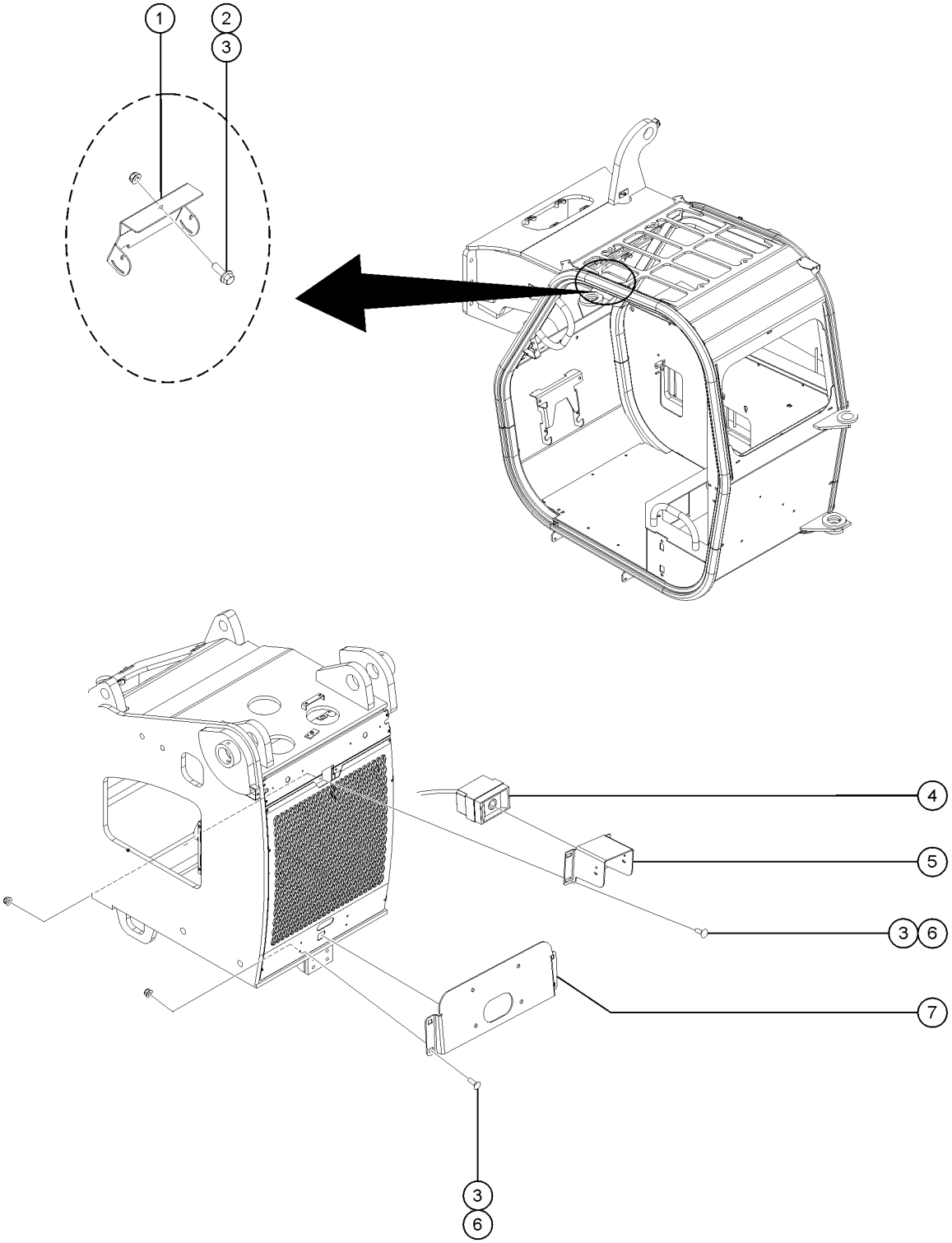

910.1 Backup Camera Option

Item	Part No.	Description	Qty.
-	1257991GT	HARNESS,REAR PROX ALARM,GTH	1
-	123688GT	FUSE,10 AMP,ATC	1
-	34052GT	RELAY,SPDT,12V(AUTO) PLUG IN**	1
-	7-269-125GT	CLAMP,ADHESIVE BACK,1/2	4
1	1286120GT	FORMING,BRACKET, BACKUP MONITOR	1
2	824078GT	SCREW,HHF,1/4-20X.75,8,ZAG	2
3	1277924GT	NUT,NYLOCK FLG,1/4-20,F,ZAG	10
4	1286185GT	COMPONENTS, REAR BACKUP CAMERA	1
5	1303324GT	FORMING,BRACKET,BACKUP CAMERA	1
6	824124GT	BOLT, CARRIAGE, 1/4-20 X .75, 5, ZAG	8
7	1303729GT	FORMING, RADAR MOUNTING	1

911.1 Cold Weather Package

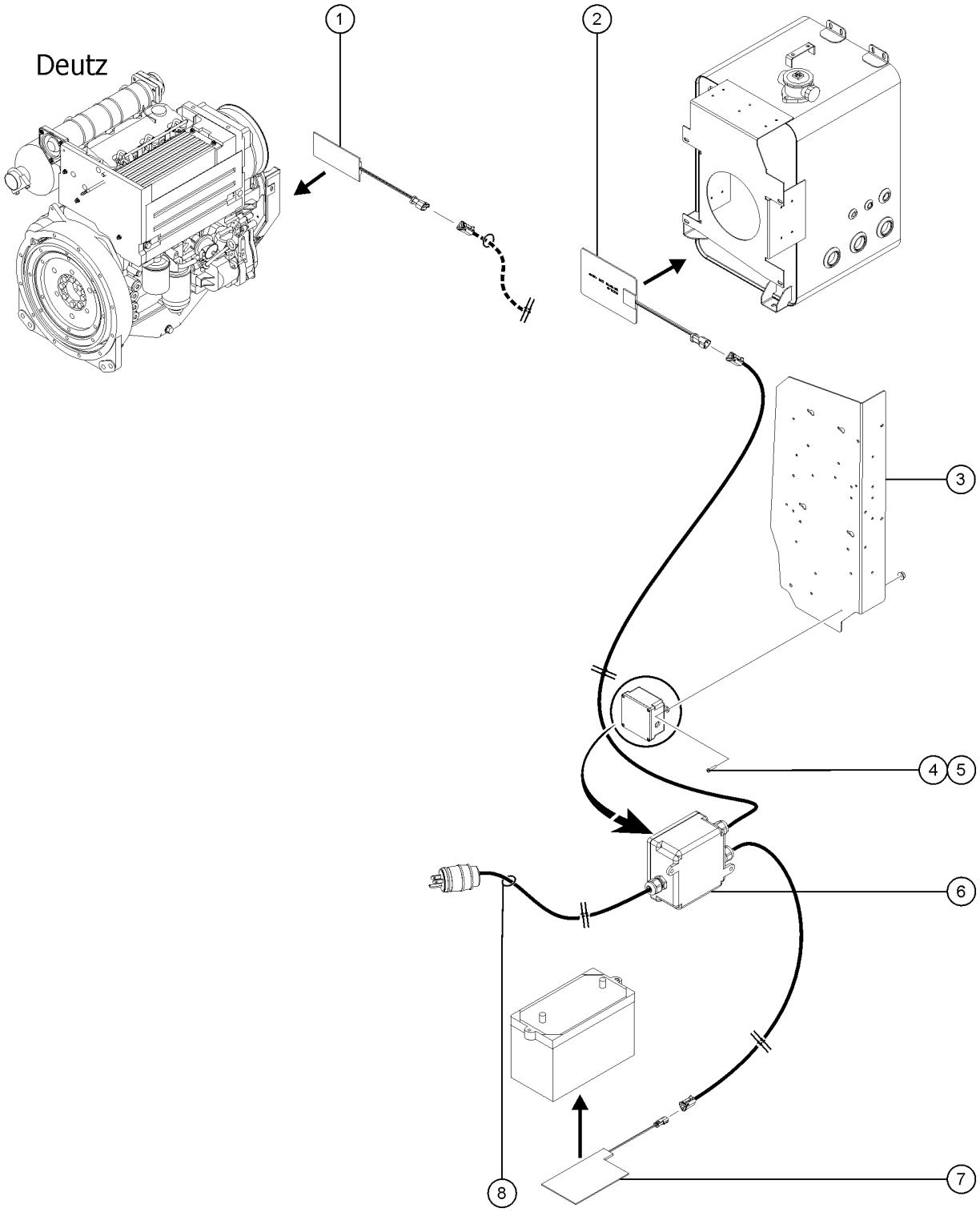

911.1 Cold Weather Package

Item	Part No.	Description	Qty.
-	1299180GT	HARNESS, CWP HEATERS, 120V	1
1	216615GT	ASSY HEATER, MODEL 18, 120V	1
2	216612GT	ASSY,120V HEATER, HYD TANK	1
3	1296766GT	FORMING, JUNCTION BOX SUPPORT	1
4	824085GT	SCREW, HHF, 5/16-18 X .75, 8, ZAG	2
5	1274167GT	NUT,NYLOCK FLG,5/16-18,F,ZAG	2
6	1291673GT	ASSY,COLD WEATHER J BOX,120V	1
7	216617GT	ASSY, BATTERY HEATER, 120V	1
8	216606GT	HARNESS, 120V POWER CORD, 24"	1

1001.1 Wire Harnesss, View 1

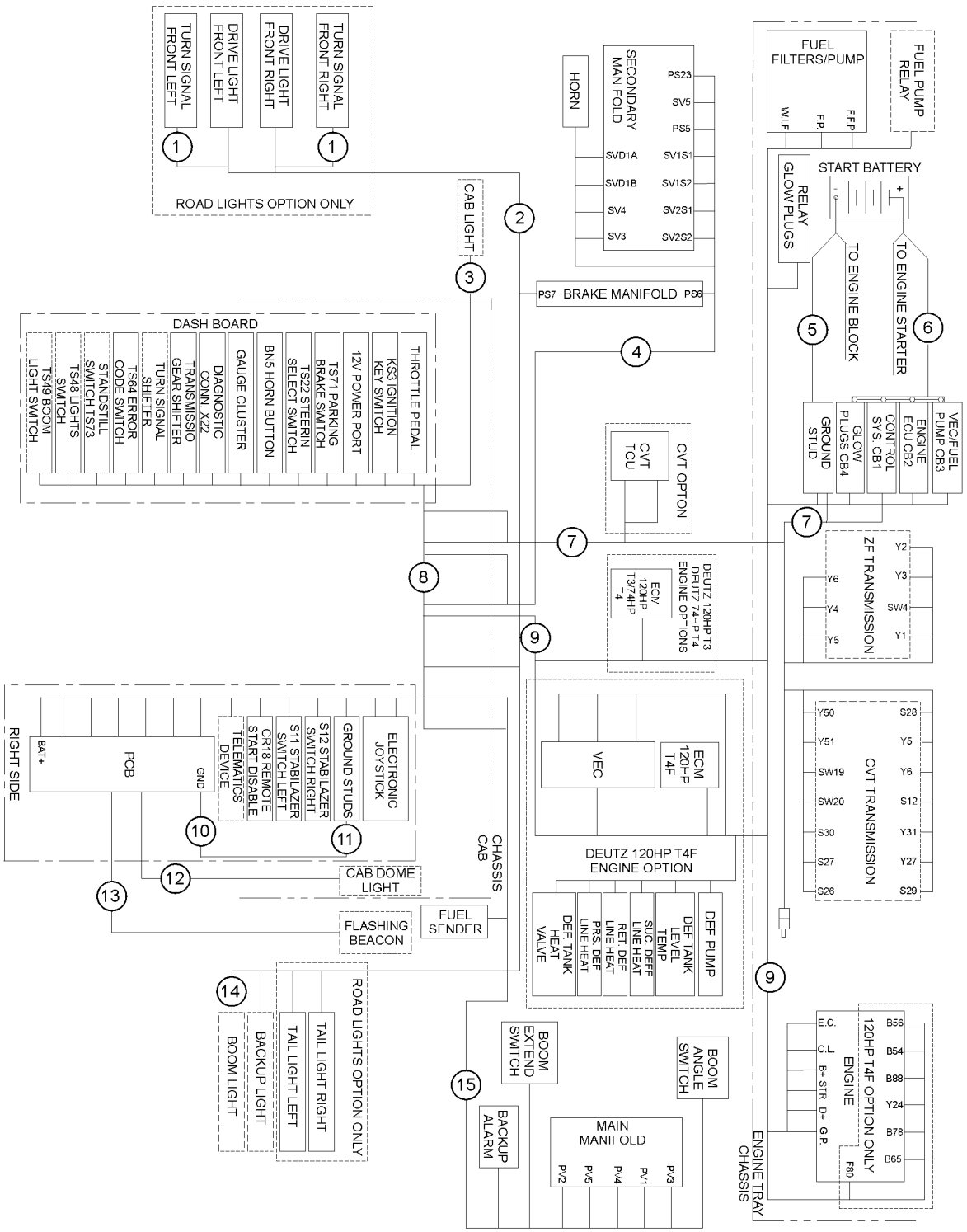

1001.1 Wire Harnesss, View 1

Item	Part No.	Description	Qty.
1	1258919GT	HARNESS, FRONT LIGHTS POWER (Refer to 1001.101)	2
2	1292105GT	HARNESS, WORK LIGHTS (Refer to 1001.102)	1
2B	1292104GT	HARNESS, ROAD LIGHTS (Refer to 1001.102B)	1
3	1258775GT	HARNESS, CAB LIGHT POWER (Refer to 1001.103)	1
4	1287856GT	HARNESS, SECONDARY MANIFOLD (Refer to 1001.104)	1
5	1262328GT	CABLE, BATTERY BLACK 2/0 (Refer to 1001.105)	1
6	1262327GT	CABLE, BATTERY RED 2/0 (Refer to 1001.106)	1
7	1305239GT	HARNESS, TRANSMISSION, DANA DANA (Refer to 1001.107C)	1
8	1305240GT	HARNESS, CAB, DANA DANA (Refer to 1001.108C)	1
9	1290091GT	HARNESS,ECM,EAT,DEUTZ,TCD3.6T4F EAT, DEUTZ, TCD3.6T4F (Refer to 1001.109)	1
9B	1291451GT	HARNESS,ECM,DEUTZ,TCD3.6 DEUTZ, TCD3.6 (Refer to 1001.109B)	1
10	237933GT	HARNESS, PCB GROUND (Refer to 1001.110)	1
11	161444GT	ASSEMBLY, GROUND BUSS (Refer to 1002.104)	1
12	233940GT	HARNESS, POWER, DOME LIGHT (Refer to 1001.112)	1
13	229682GT	HARNESS, POWER, BEACON LIGHT (Refer to 1001.113)	1
14	1263760GT	HARNESS, BOOM LIGHT POWER (Refer to 1001.114)	1
15	1287857GT	HARNESS, PRIMARY PVG MANIFOLD (Refer to 1001.115)	1

1001.101 Harness, Front Lights Power

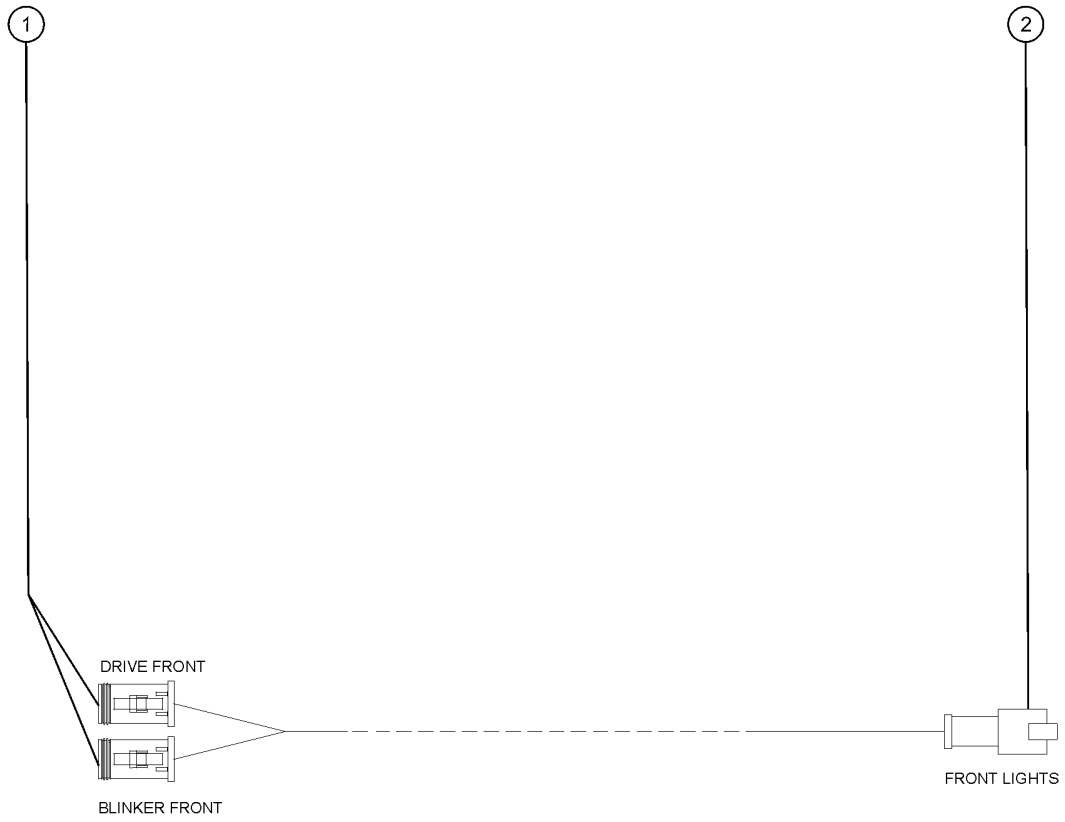

1001.101 Harness, Front Lights Power

Item	*Part No.*	*Description*	*Qty.*
-	1258919GT	HARNESS, FRONT LIGHTS POWER	1
1	119056GT	CONN, PLUG, 2 WAY, DEUTSCH, DT, ENDCAP	2
1-	60425GT	CONN, PLUG, 2 WAY, DEUTSCH, DT, LOCK	2
2	119067GT	CONN, RECEP, 4 WAY, DEUTSCH, DT, ENDCAP	1
2-	60443GT	LOCK, RECEP 4WAY, 14-18GA	1

1001.102 Harness, Work Lights

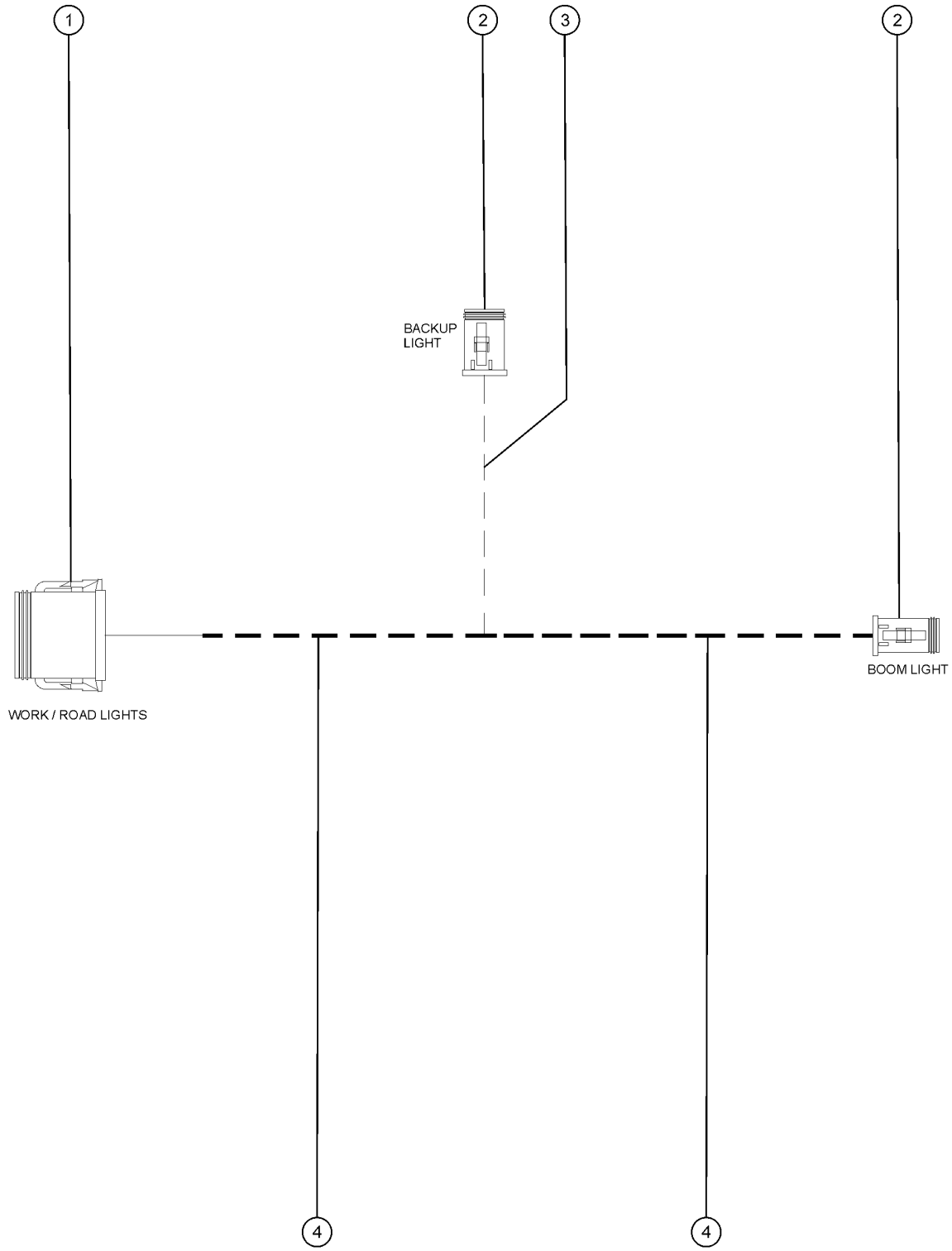

Item	Part No.	Description	Qty.
-	1292105GT	HARNESS, WORK LIGHTS	1
1	119064GT	CONN PLUG 12 WAY ENDCAP DT BR	1
1-	60435GT	LOCK, PLUG 12WAY, 14-18GA, GRN	1
2	119056GT	CONN, PLUG, 2 WAY, DEUTSCH, DT, ENDCAP	2
2-	60425GT	CONN, PLUG, 2 WAY, DEUTSCH, DT, LOCK	2
3	99087GT	WIRE LOOM,1/4 DIA. SLIT	20 Inches
4	20973GT	WIRE LOOM,3/8 POLY SLIT	153 Inches

1001.102B Harness, Road Lights

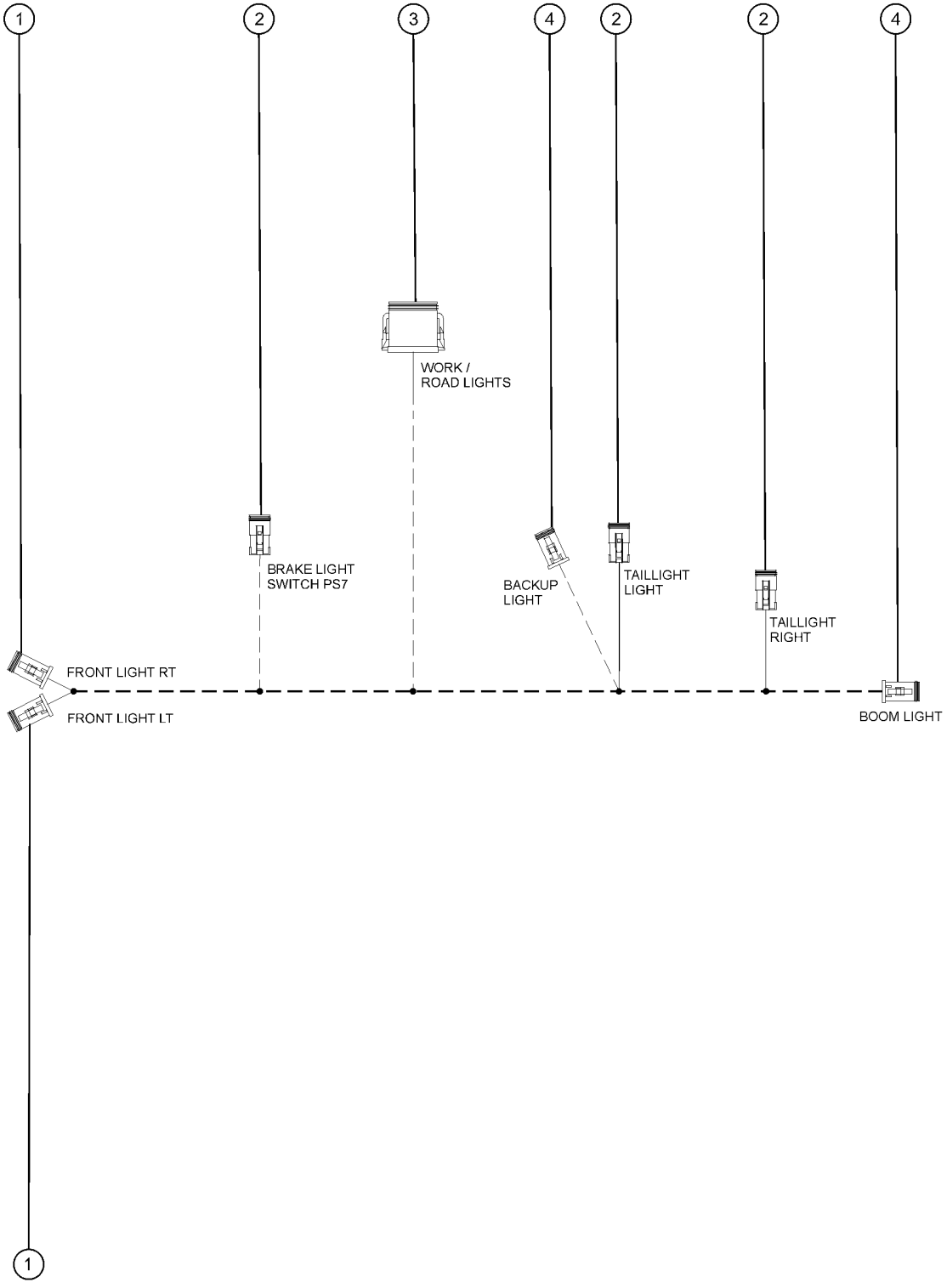

1001.102B Harness, Road Lights

Item	Part No.	Description	Qty.
-	1292104GT	HARNESS, ROAD LIGHTS	1
-	20973GT	WIRE LOOM,3/8 POLY SLIT	70 Inches
-	99087GT	WIRE LOOM,1/4 DIA. SLIT	37 Inches
-	39908GT	WIRE LOOM,1/2 DIA.	180 Inches
1	119058GT	CONN, PLUG, 4 WAY, DEUTSCH, DT, ENDCAP	2
1-	60429GT	LOCK, PLUG 4WAY, 14-18GA	2
2	119057GT	CONN, PLUG, 3 WAY, DEUTSCH, DT, ENDCAP	3
2-	60427GT	CONN, PLUG, 3 WAY, DEUTSCH, DT, LOCK	3
3	119064GT	CONN PLUG 12 WAY ENDCAP DT BR	1
3-	60435GT	LOCK, PLUG 12WAY, 14-18GA, GRN	1
4	119056GT	CONN, PLUG, 2 WAY, DEUTSCH, DT, ENDCAP	2
4-	60425GT	CONN, PLUG, 2 WAY, DEUTSCH, DT, LOCK	2

1001.103 Harness, Cab Light Power

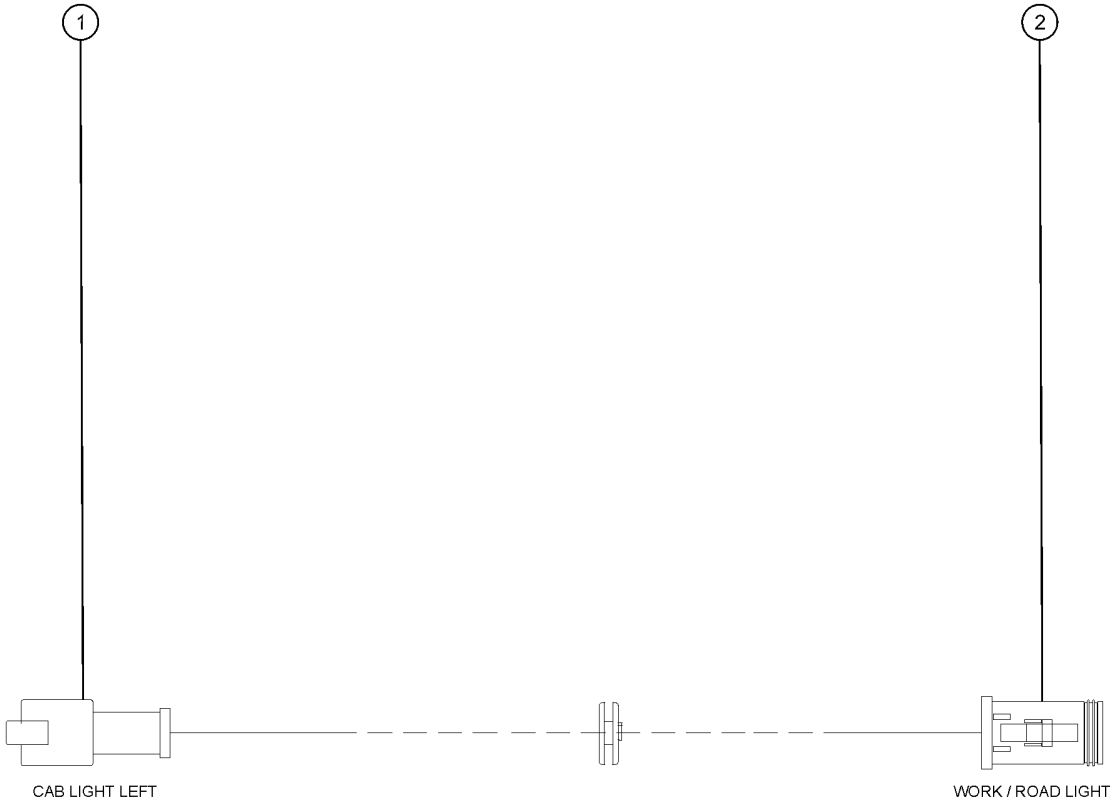

1001.103 Harness, Cab Light Power

Item	*Part No.*	*Description*	*Qty.*
-	1258775GT	HARNESS, CAB LIGHT POWER	1
1	119065GT	CONN, RECEP, 2 WAY, DEUTSCH, DT	1
1-	60439GT	CONN, RECEP, 2 WAY, DEUTSCH, DT, LOCK	1
2	119056GT	CONN, PLUG, 2 WAY, DEUTSCH, DT, ENDCAP	1
2-	60425GT	CONN, PLUG, 2 WAY, DEUTSCH, DT, LOCK	1

1001.104 Harness, Secondary Manifold

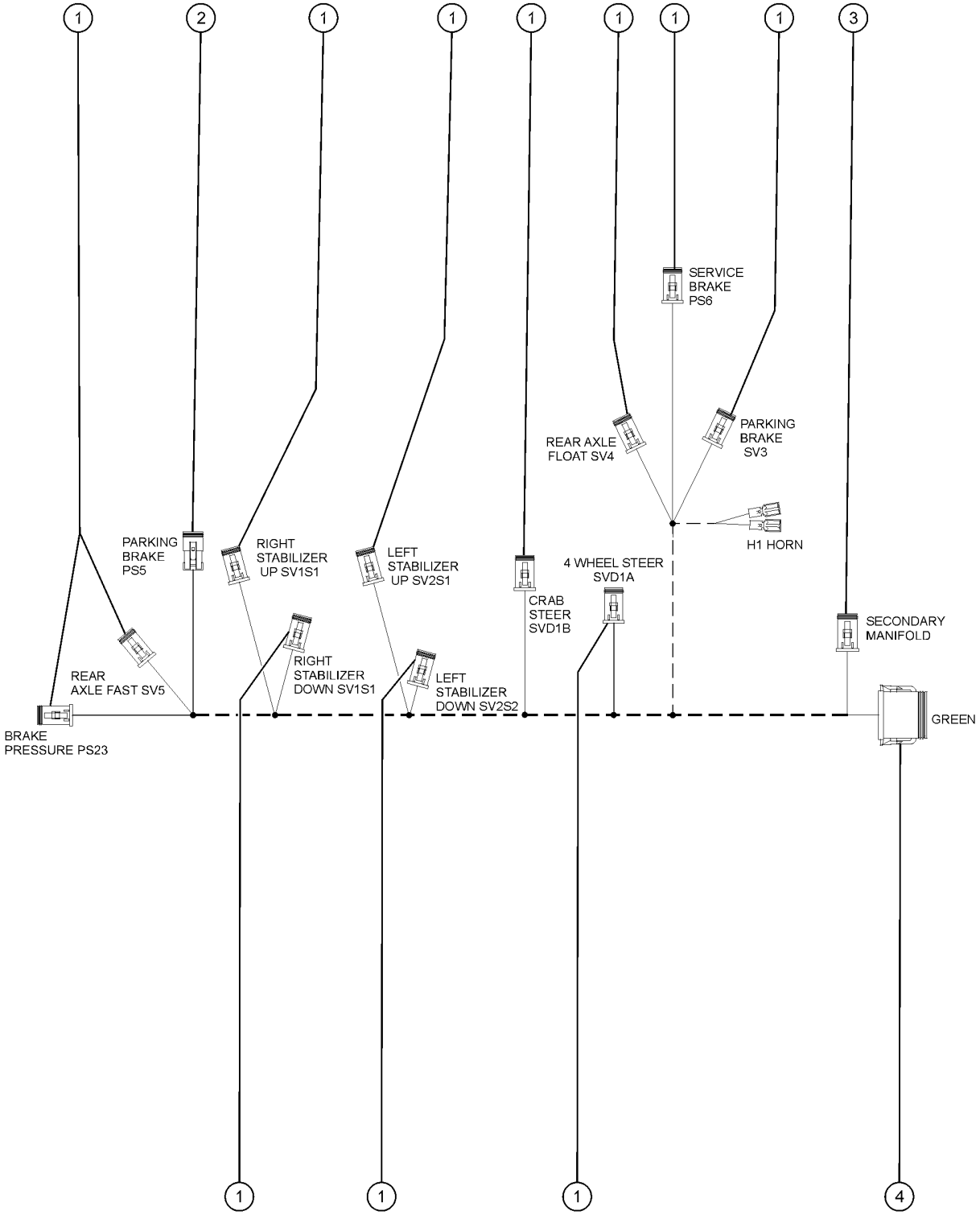

1001.104 Harness, Secondary Manifold

Item	*Part No.*	*Description*	*Qty.*
-	1287856GT	HARNESS, SECONDARY MANIFOLD	1
1	119056GT	CONN, PLUG, 2 WAY, DEUTSCH, DT, ENDCAP	11
1-	60425GT	CONN, PLUG, 2 WAY, DEUTSCH, DT, LOCK	11
2	119057GT	CONN, PLUG, 3 WAY, DEUTSCH, DT, ENDCAP	1
2-	60427GT	CONN, PLUG, 3 WAY, DEUTSCH, DT, LOCK	1
3	119058GT	CONN, PLUG, 4 WAY, DEUTSCH, DT, ENDCAP	1
3-	60429GT	LOCK, PLUG 4WAY, 14-18GA	1
4	119063GT	CONN PLUG 12 WAY ENDCAP DT GR	1
4-	60435GT	LOCK, PLUG 12WAY, 14-18GA, GRN	1

1001.105 Cable, Battery Black 2/0

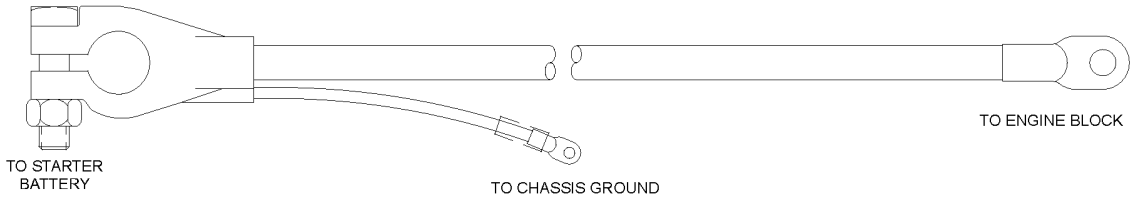

1001.105 Cable, Battery Black 2/0

Item	Part No.	Description	Qty.
-	1262328GT	CABLE, BATTERY BLACK 2/0	1

1001.106 Cable, Battery Red 2/0

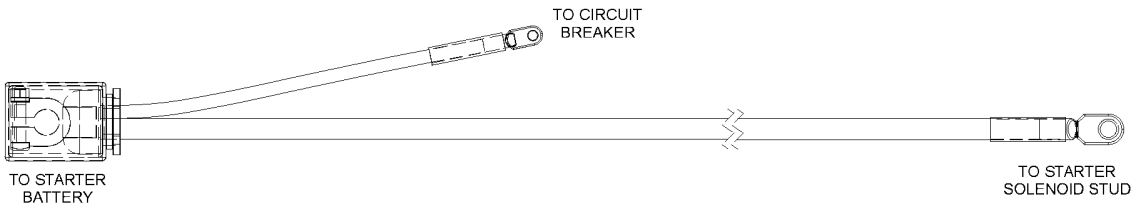

1001.106 Cable, Battery Red 2/0

Item	Part No.	Description	Qty.
-	1262327GT	CABLE, BATTERY RED 2/0	1

1001.107 Harness, Transmission, ZF

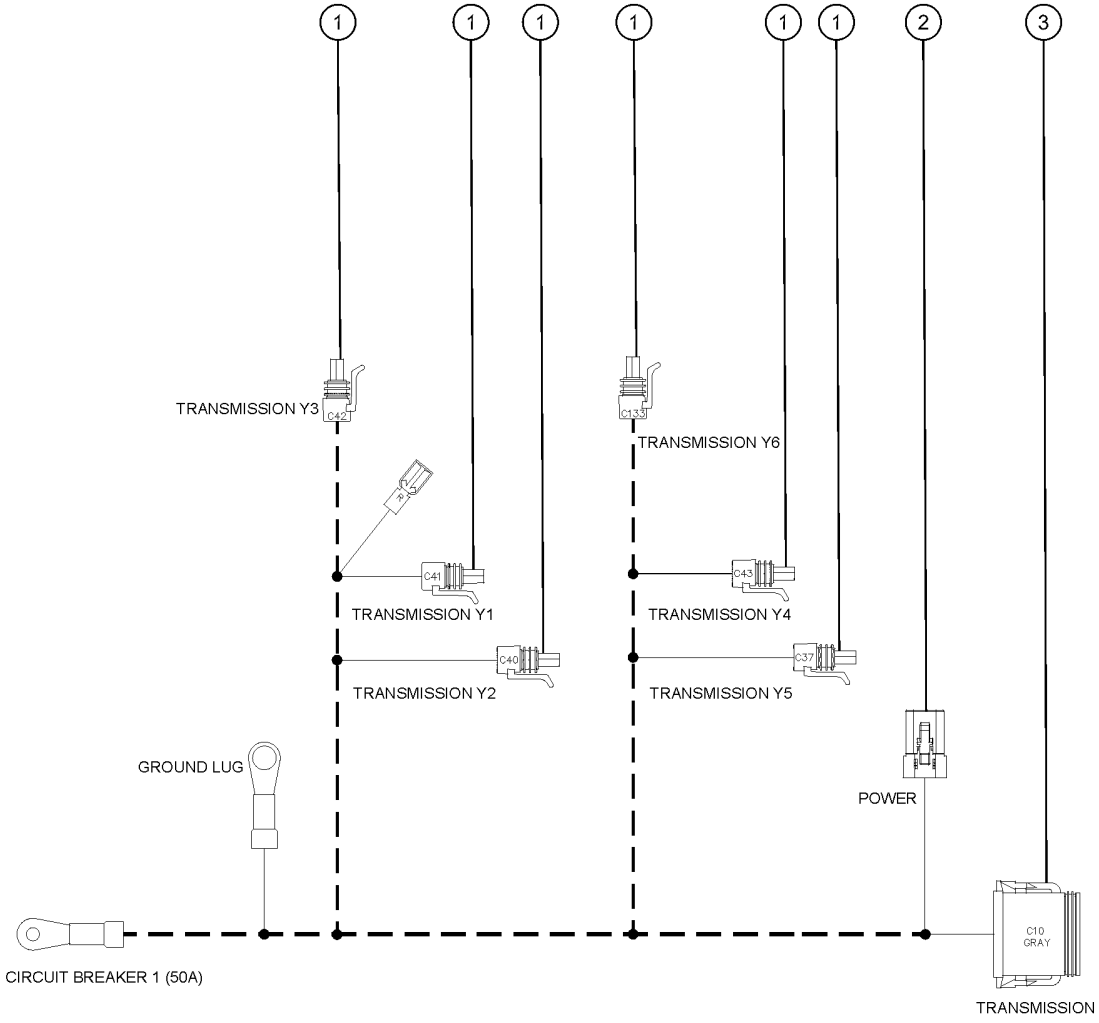

1001.107 Harness, Transmission, ZF

Item	*Part No.*	*Description*	*Qty.*
-	1287855GT	HARNESS,TRANSMISSION,ZF	1
1	81510GT	CONNECTOR, PACKARD 2PIN 12162193	6
2	60527GT	CONN, PLUG, 4 WAY, DEUTSCH, DTP	1
2-	60528GT	LOCK,PLUG 4 WAY,12-14GA***	1
3	119061GT	CONN, PLUG, 12 WAY, DEUTSCH, DT, GRAY	1
3-	60435GT	LOCK, PLUG 12WAY, 14-18GA, GRN	1

1001.107B Harness, Transmission, CVT

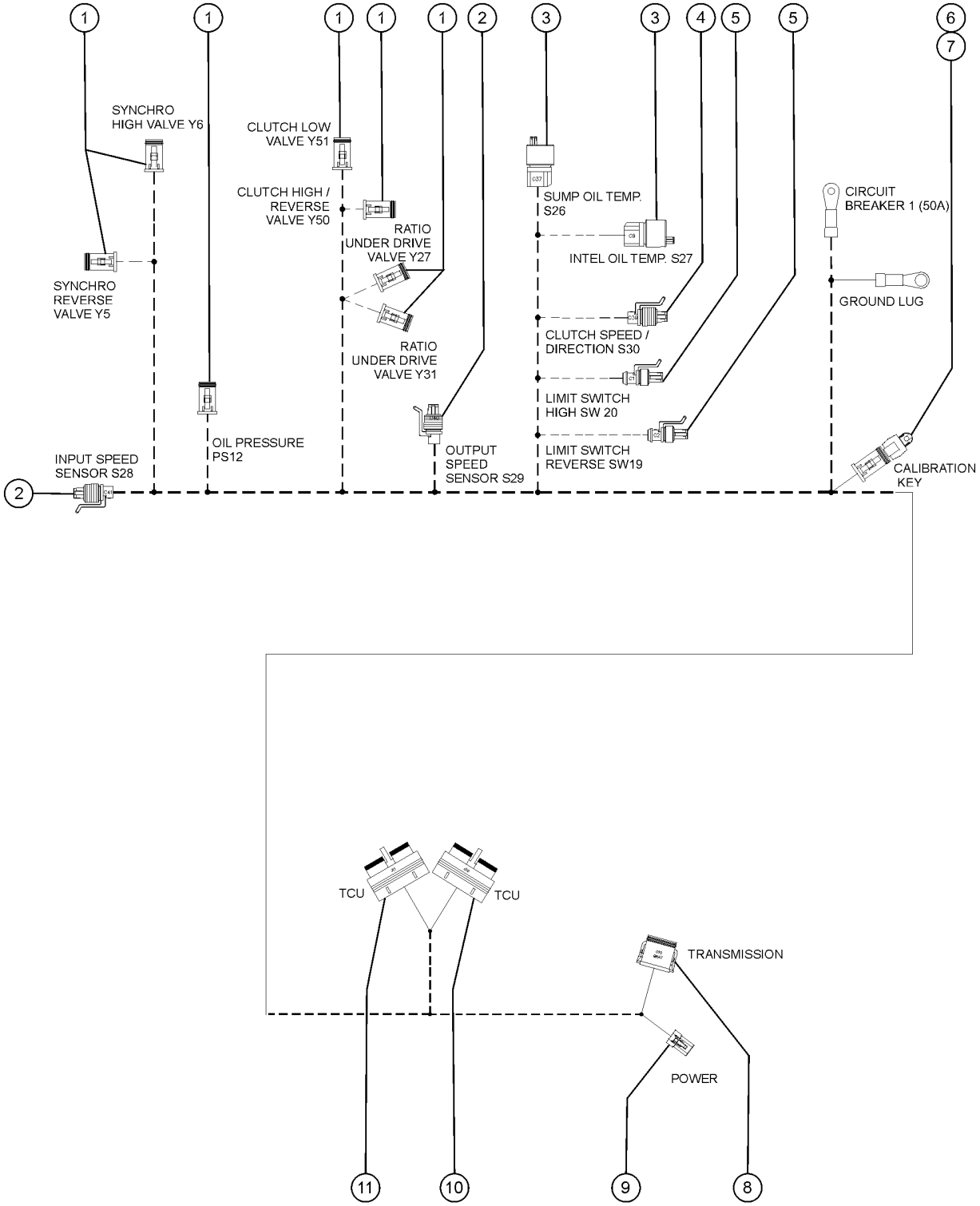

1001.107B Harness, Transmission, CVT

Item	Part No.	Description	Qty.
-	1292644GT	HARNESS,TRANSMISSION,CVT	1
1	119056GT	CONN, PLUG, 2 WAY, DEUTSCH, DT, ENDCAP	7
1-	60425GT	CONN, PLUG, 2 WAY, DEUTSCH, DT, LOCK	7
2	1301608GT	CONN,PLUG 3 WAY,DELPHI 150.2	2
3	1294320GT	CONN,PLUG 2 WAY,DELPHI GT150	2
3-	1294808GT	LOCK,PLUG 2 WAY,DELPHI GT150	2
4	1294326GT	CONN,PLUG 4 WAY,DELPHI 150.2	1
5	1294323GT	CONN,PLUG 2 WAY,AMP SRS 1.5	2
6	1302957GT	CONN, CAP, 4 WAY DT SERIES	1
7	119058GT	CONN, PLUG, 4 WAY, DEUTSCH, DT, ENDCAP	1
7-	60429GT	LOCK, PLUG 4WAY, 14-18GA	1
8	119061GT	CONN, PLUG, 12 WAY, DEUTSCH, DT, GRAY	1
8-	60435GT	LOCK, PLUG 12WAY, 14-18GA, GRN	1
9	60527GT	CONN, PLUG, 4 WAY, DEUTSCH, DTP	1
9-	60528GT	LOCK,PLUG 4 WAY,12-14GA***	1
10	1294333GT	CONN,PLUG 30 WAY,CINCH,A	1
11	1294330GT	CONN,PLUG 30 WAY,CINCH,B	1

1001.107C Harness, Transmission, Dana

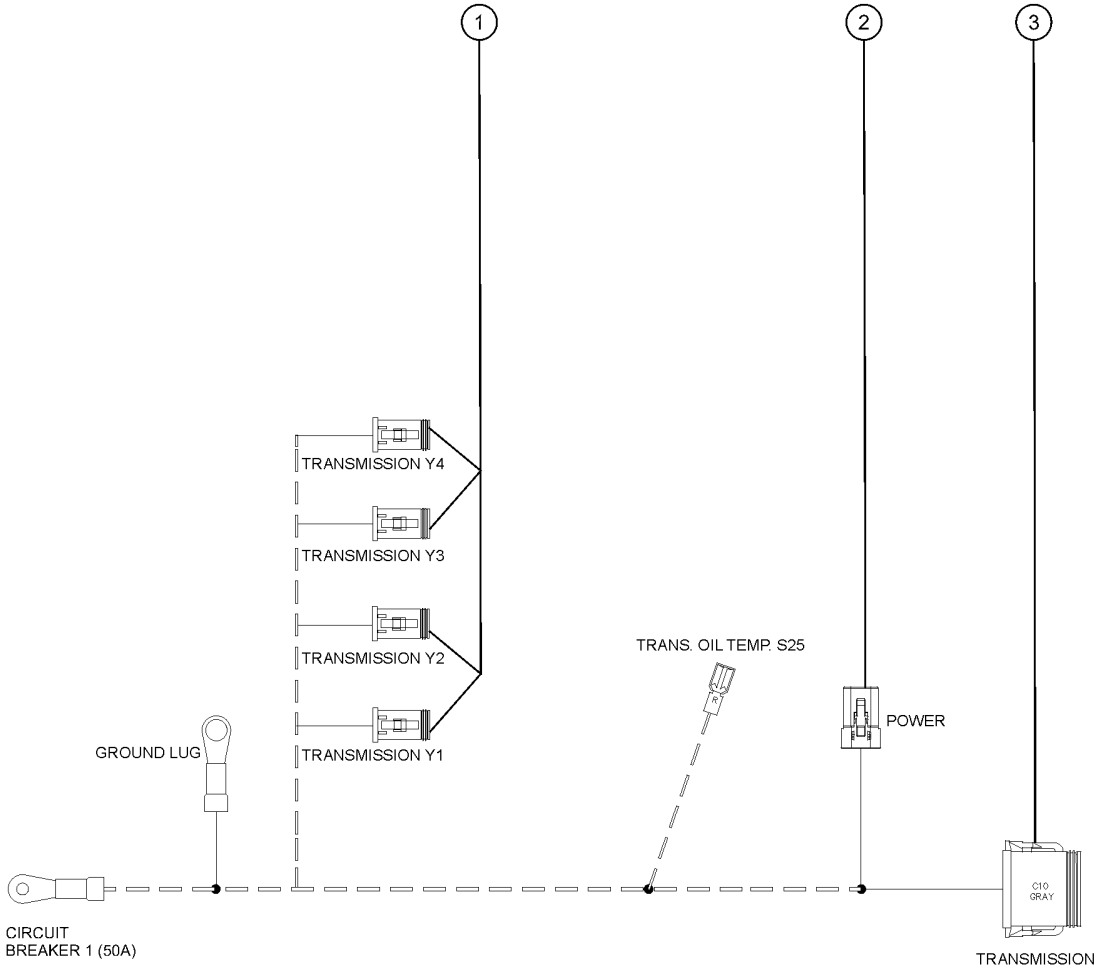

1001.107C Harness, Transmission, Dana

Item	*Part No.*	*Description*	*Qty.*
-	1305239GT	HARNESS, TRANSMISSION, DANA	1
1	119056GT	CONN, PLUG, 2 WAY, DEUTSCH, DT, ENDCAP	4
1-	60425GT	CONN, PLUG, 2 WAY, DEUTSCH, DT, LOCK	4
2	60527GT	CONN, PLUG, 4 WAY, DEUTSCH, DTP	1
2-	60528GT	LOCK,PLUG 4 WAY,12-14GA***	1
3	119061GT	CONN, PLUG, 12 WAY, DEUTSCH, DT, GRAY	1
3-	60435GT	LOCK, PLUG 12WAY, 14-18GA, GRN	1

1001.108 Harness, Cab, ZF

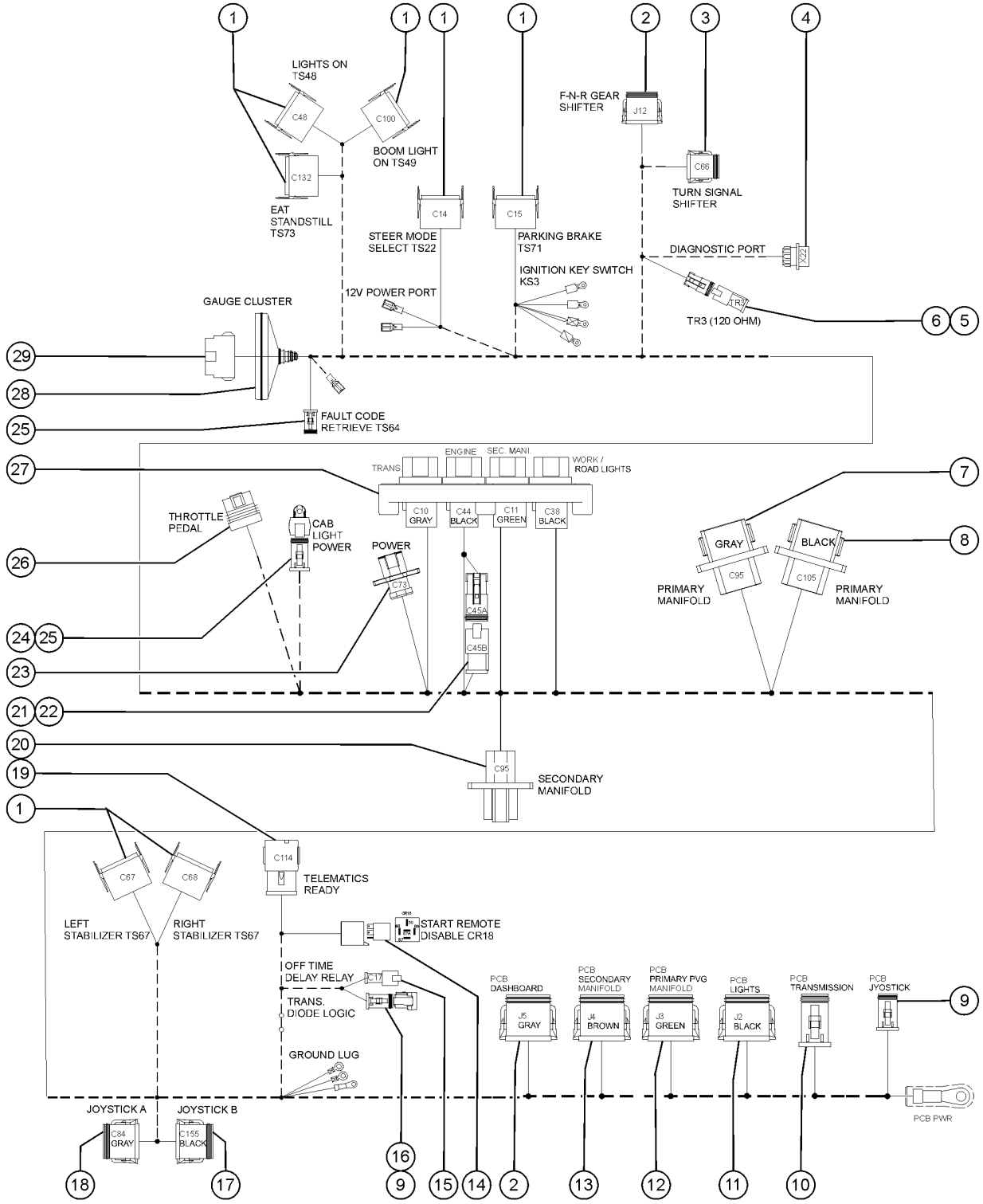

1001.108 Harness, Cab, ZF

Item	Part No.	Description	Qty.
-	1287854GT	HARNESS, CAB, ZF	1
1	130157GT	CONNECTOR,L-SERIES,SWITCH	7
2	119061GT	CONN, PLUG, 12 WAY, DEUTSCH, DT, GRAY	2
2-	60435GT	LOCK, PLUG 12WAY, 14-18GA, GRN	2
3	119060GT	CONN, PLUG, 8 WAY, DEUTSCH, DT, ENDCAP/ GRAY	1
3-	60433GT	LOCK,PLUG 8 WAY, 14-18GA	1
4	1298652GT	CONN,RECPT,CANNON NEP, 12WAY, SIZE14	1
4-	1298654GT	DUST CAP, CANNON NEP, SIZE14	1
5	119057GT	CONN, PLUG, 3 WAY, DEUTSCH, DT, ENDCAP	2
5-	60459GT	LOCK,PLUG 3 WAY,SAE J1939	2
6	60452GT	CONN, RECEP, 3 WAY, DEUTSCH, DT, J1939/120OHM	1
7	73730GT	CONN, RECEP, 12 WAY, DEUTSCH, DT, GRAY/FLANGE	1
7-	60429GT	LOCK, PLUG 4WAY, 14-18GA	1
8	73733GT	CONN, RECEP, 12 WAY, DEUTSCH, DT, BLACK/FLANGE	1
8-	54255GT	LOCK, RECEP 12WAY, 14-18GA	1
9	119058GT	CONN, PLUG, 4 WAY, DEUTSCH, DT, ENDCAP	2
9-	60429GT	LOCK, PLUG 4WAY, 14-18GA	2
10	119059GT	CONN PLUG 6 WAY ENDCAP DT	1
10-	60431GT	LOCK, PLUG 6WAY, 14-18GA	1
11	119062GT	CONN, PLUG, 12 WAY, DEUTSCH, DT, BLACK	1
11-	60435GT	LOCK, PLUG 12WAY, 14-18GA, GRN	1
12	119063GT	CONN PLUG 12 WAY ENDCAP DT GR	1
12-	60435GT	LOCK, PLUG 12WAY, 14-18GA, GRN	1
13	119064GT	CONN PLUG 12 WAY ENDCAP DT BR	1
13-	60435GT	LOCK, PLUG 12WAY, 14-18GA, GRN	1
14	34052GT	RELAY,SPDT,12V(AUTO) PLUG IN**	1
14-	34053GT	ASSY,RELAY SOCKET,AUTO***	1
15	119067GT	CONN, RECEP, 4 WAY, DEUTSCH, DT, ENDCAP	1

1001.108 Harness, Cab, ZF

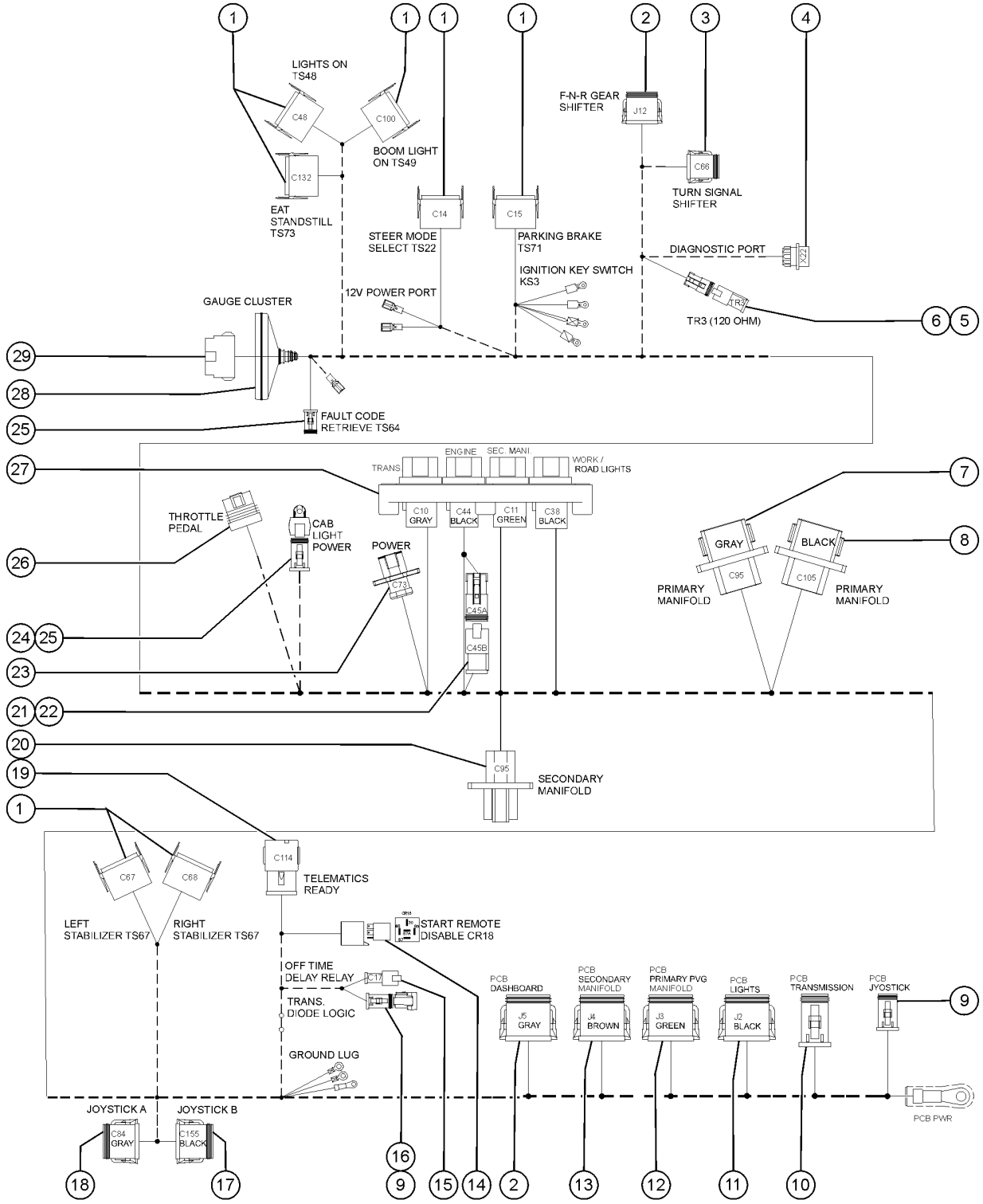

Item	Part No.	Description	Qty.
15-	60443GT	LOCK, RECEP 4WAY, 14-18GA	1
16	123269GT	CONN,RECEP 4 WAY BLK,3 DIODE	1
17	106780GT	CONN, PLUG, 12 WAY, DEUTSCH, DTM, BLACK, KEY-B	1
17-	88332GT	LOCK,PLUG 12 WAY DTM 18-20GA	1
18	88331GT	CONN, PLUG, 12 WAY, DEUTSCH, DTM, GRAY, KEY-A	1
18-	88332GT	LOCK,PLUG 12 WAY DTM 18-20GA	1
19	119070GT	CONN,RECEP 12 WAY ENDCAP DT	1
19-	54255GT	LOCK, RECEP 12WAY, 14-18GA	1
20	73723GT	CONN RECEPT,FLANGED	1
20-	60443GT	LOCK, RECEP 4WAY, 14-18GA	1
21	119057GT	CONN, PLUG, 3 WAY, DEUTSCH, DT, ENDCAP	2
21-	60459GT	LOCK,PLUG 3 WAY,SAE J1939	2
22	119066GT	CONN, RECEP, 3 WAY, DEUTSCH, DT, ENDCAP	1
22-	60460GT	LOCK,RECEP 3 WAY,SAEJ1939	1
23	73717GT	CONN, RECEP, 4 WAY, DEUTSCH, DTP, FLANGE	1
23-	60526GT	LOCK,RECEP 4 WAY,12-14GA	1
24	229110GT	CONN, RECEP, 2 WAY, DEUTSCH, DT, CAP	1
25	119056GT	CONN, PLUG, 2 WAY, DEUTSCH, DT, ENDCAP	2
25-	60425GT	CONN, PLUG, 2 WAY, DEUTSCH, DT, LOCK	2
26	1299252GT	CONN PLUG 6 WAY,METRIPACK 150.2,SEALED	1
27	73736GT	CONN,RECEP 48 WAY,4 X 12	1
27-	54255GT	LOCK, RECEP 12WAY, 14-18GA	1
28	822813GT	BOOT, GAUGE CLUSTER CONN,GTH	1
29	123436GT	CONN,PLUG,AMP, 1-640526-0	1

1001.108B Harness, Cab,CVT

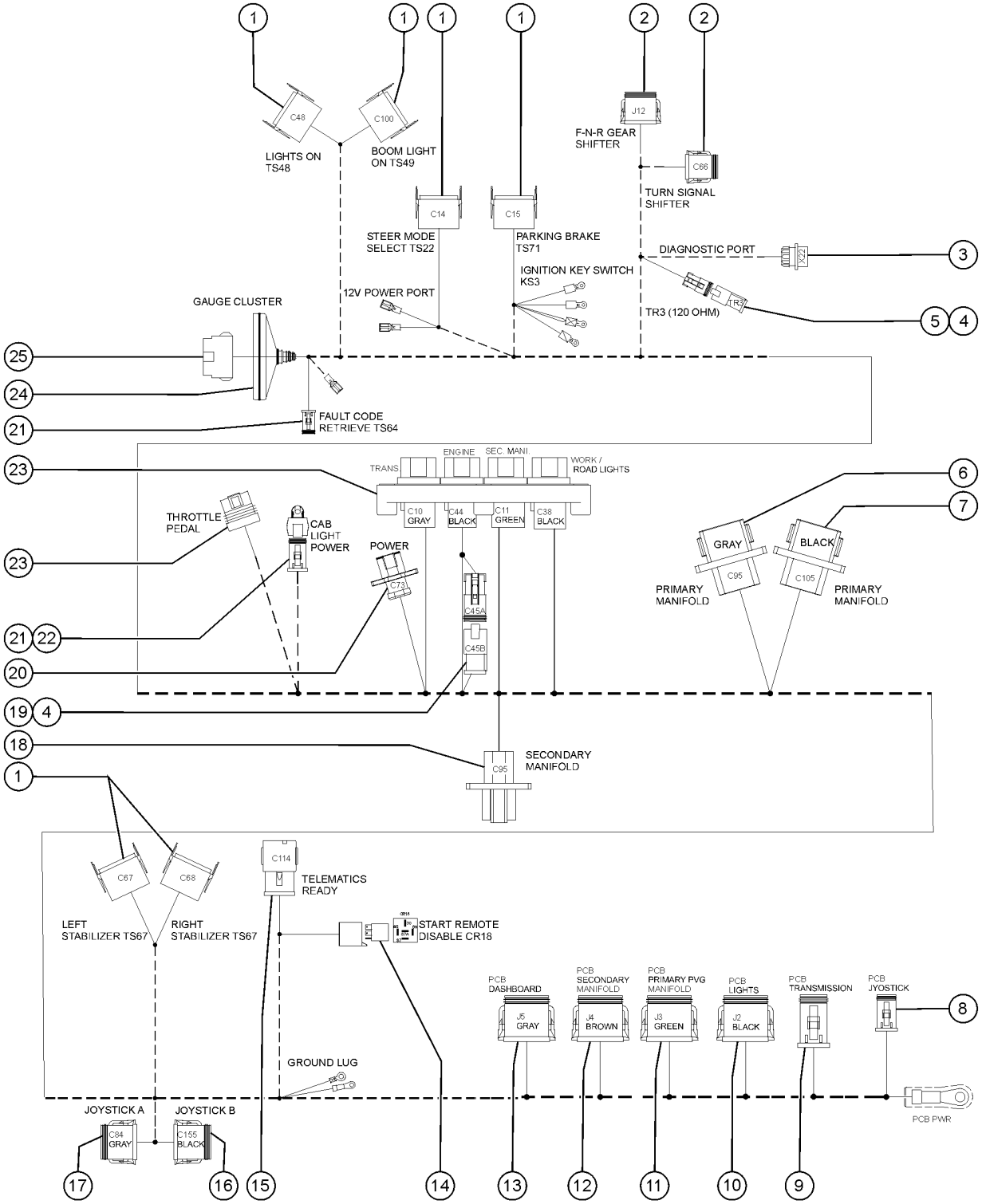

1001.108B Harness, Cab,CVT

Item	Part No.	Description	Qty.
-	1292834GT	HARNESS, CAB, CVT	1
1	130157GT	CONNECTOR,L-SERIES,SWITCH	6
2	119060GT	CONN, PLUG, 8 WAY, DEUTSCH, DT, ENDCAP/ GRAY	2
2-	60433GT	LOCK,PLUG 8 WAY, 14-18GA	2
3	1298652GT	CONN,RECPT,CANNON NEP, 12WAY, SIZE14	1
3-	1298654GT	DUST CAP, CANNON NEP, SIZE14	1
4	119057GT	CONN, PLUG, 3 WAY, DEUTSCH, DT, ENDCAP	2
4-	60459GT	LOCK,PLUG 3 WAY,SAE J1939	2
5	60452GT	CONN, RECEP, 3 WAY, DEUTSCH, DT, J1939/120OHM	1
6	73730GT	CONN, RECEP, 12 WAY, DEUTSCH, DT, GRAY/FLANGE	1
6-	54255GT	LOCK, RECEP 12WAY, 14-18GA	1
7	73733GT	CONN, RECEP, 12 WAY, DEUTSCH, DT, BLACK/FLANGE	1
7-	54255GT	LOCK, RECEP 12WAY, 14-18GA	1
8	119058GT	CONN, PLUG, 4 WAY, DEUTSCH, DT, ENDCAP	1
8-	60429GT	LOCK, PLUG 4WAY, 14-18GA	1
9	119059GT	CONN PLUG 6 WAY ENDCAP DT	1
9-	60431GT	LOCK, PLUG 6WAY, 14-18GA	1
10	119062GT	CONN, PLUG, 12 WAY, DEUTSCH, DT, BLACK	1
10-	60435GT	LOCK, PLUG 12WAY, 14-18GA, GRN	1
11	119063GT	CONN PLUG 12 WAY ENDCAP DT GR	1
11-	60435GT	LOCK, PLUG 12WAY, 14-18GA, GRN	1
12	119064GT	CONN PLUG 12 WAY ENDCAP DT BR	1
12-	60435GT	LOCK, PLUG 12WAY, 14-18GA, GRN	1
13	119061GT	CONN, PLUG, 12 WAY, DEUTSCH, DT, GRAY	1
13-	60435GT	LOCK, PLUG 12WAY, 14-18GA, GRN	1
14	34052GT	RELAY,SPDT,12V(AUTO) PLUG IN**	1
14-	34053GT	ASSY,RELAY SOCKET,AUTO***	1
15	119070GT	CONN,RECEP 12 WAY ENDCAP DT	1

1001.108B Harness, Cab,CVT

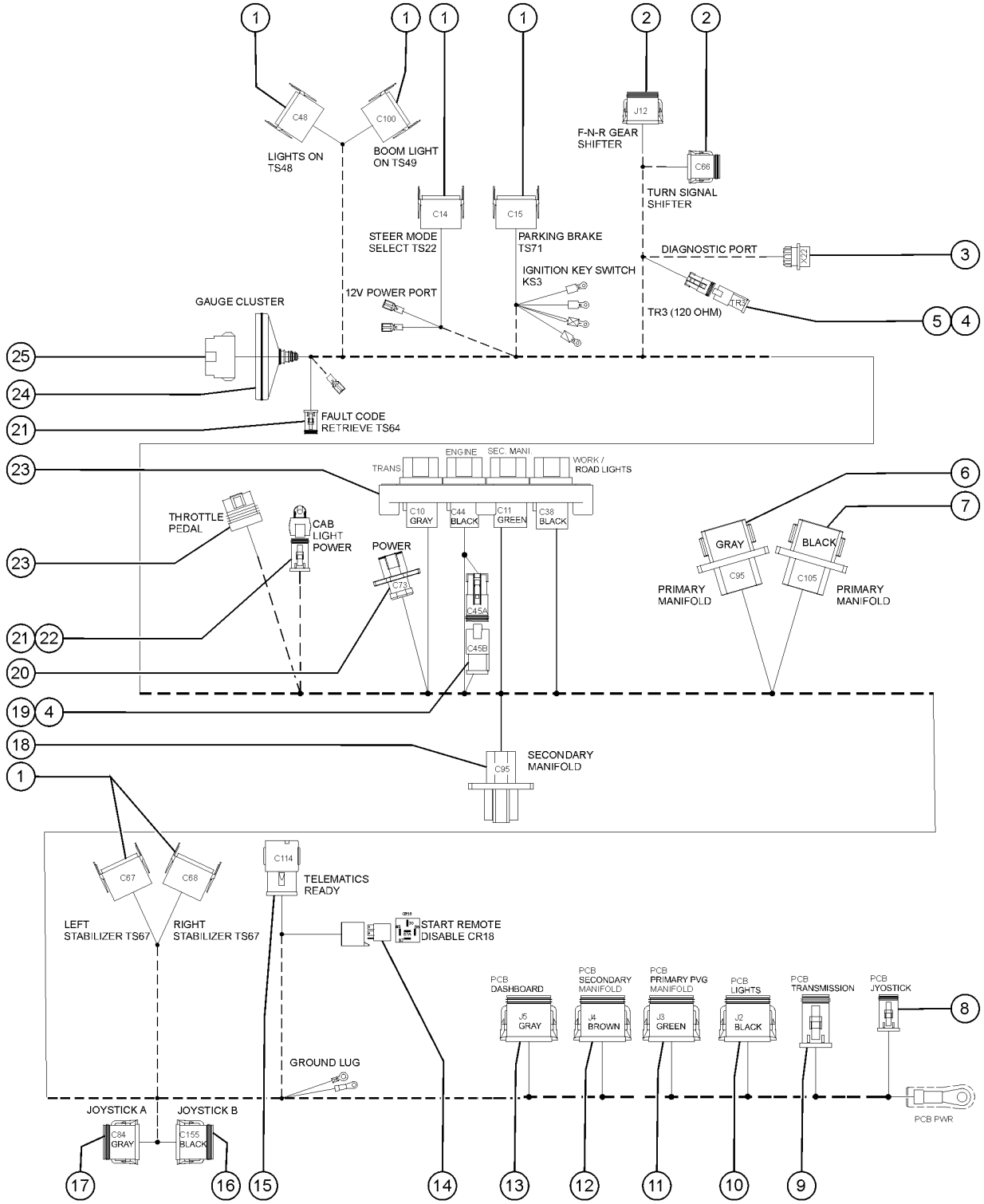

1001.108B Harness, Cab,CVT

Item	Part No.	Description	Qty.
15-	54255GT	LOCK, RECEP 12WAY, 14-18GA	1
16	106780GT	CONN, PLUG, 12 WAY, DEUTSCH, DTM, BLACK, KEY-B	1
16-	88332GT	LOCK,PLUG 12 WAY DTM 18-20GA	1
17	88331GT	CONN, PLUG, 12 WAY, DEUTSCH, DTM, GRAY, KEY-A	1
17-	88332GT	LOCK,PLUG 12 WAY DTM 18-20GA	1
18	73723GT	CONN RECEPT,FLANGED	1
18-	60443GT	LOCK, RECEP 4WAY, 14-18GA	1
19	119066GT	CONN, RECEP, 3 WAY, DEUTSCH, DT, ENDCAP	1
19-	60460GT	LOCK,RECEP 3 WAY,SAEJ1939	1
20	60526GT	LOCK,RECEP 4 WAY,12-14GA	1
20-	73717GT	CONN, RECEP, 4 WAY, DEUTSCH, DTP, FLANGE	1
21	119056GT	CONN, PLUG, 2 WAY, DEUTSCH, DT, ENDCAP	2
21-	60425GT	CONN, PLUG, 2 WAY, DEUTSCH, DT, LOCK	2
22	229110GT	CONN, RECEP, 2 WAY, DEUTSCH, DT, CAP	1
23	73736GT	CONN,RECEP 48 WAY,4 X 12	1
23-	54255GT	LOCK, RECEP 12WAY, 14-18GA	
24	822813GT	BOOT, GAUGE CLUSTER CONN,GTH	1
25	123436GT	CONN,PLUG,AMP, 1-640526-0	1

1001.108C Harness, Cab, DANA

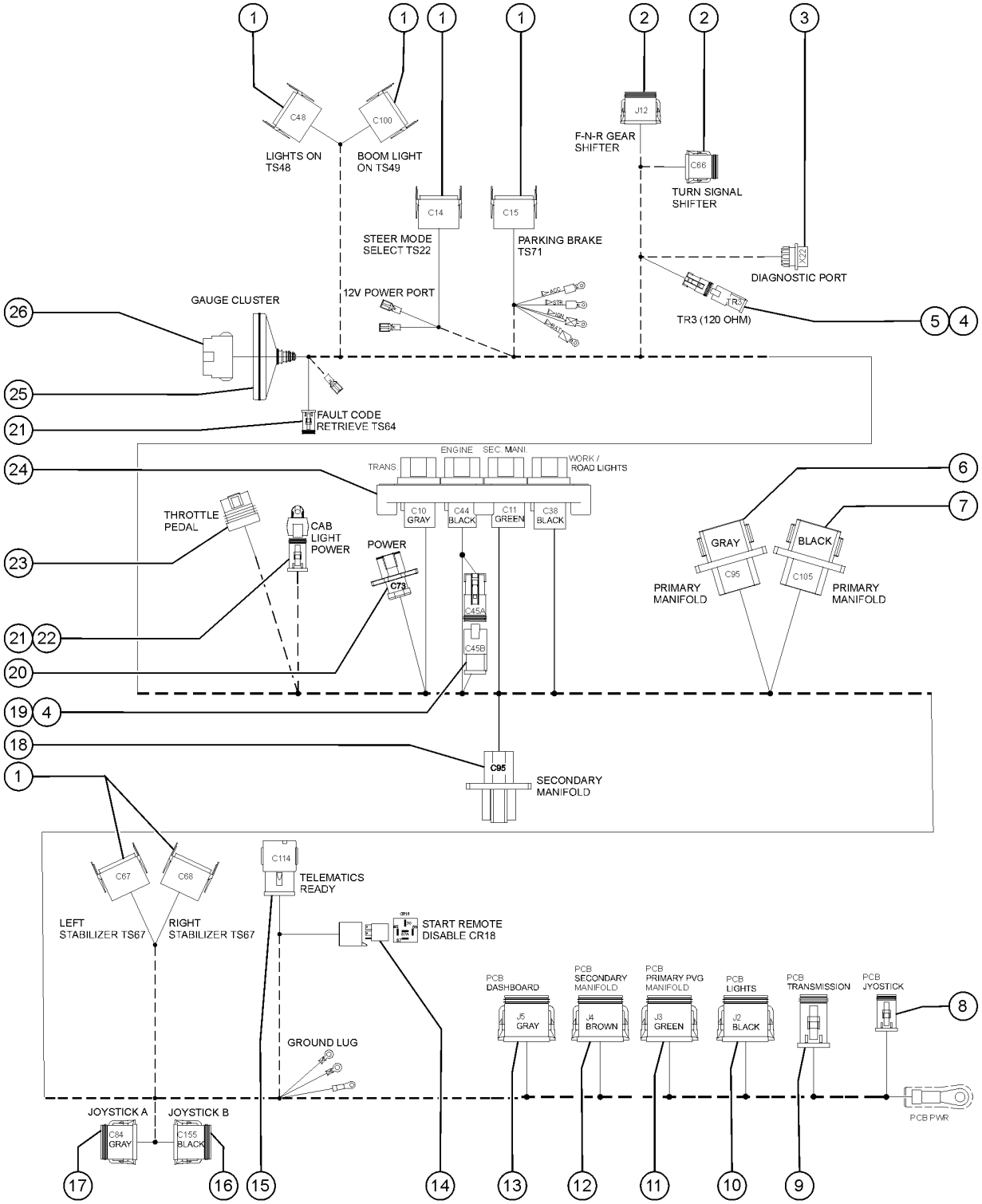

1001.108C Harness, Cab, DANA

Item	Part No.	Description	Qty.
-	1305240GT	HARNESS, CAB, DANA	1
1	130157GT	CONNECTOR,L-SERIES,SWITCH	6
2	119060GT	CONN, PLUG, 8 WAY, DEUTSCH, DT, ENDCAP/ GRAY	2
2-	60433GT	LOCK,PLUG 8 WAY, 14-18GA	2
3	1298652GT	CONN,RECPT,CANNON NEP, 12WAY, SIZE14	1
3-	1298654GT	DUST CAP, CANNON NEP, SIZE14	1
4	119057GT	CONN, PLUG, 3 WAY, DEUTSCH, DT, ENDCAP	2
4-	60459GT	LOCK,PLUG 3 WAY,SAE J1939	2
5	60452GT	CONN, RECEP, 3 WAY, DEUTSCH, DT, J1939/120OHM	1
6	73730GT	CONN, RECEP, 12 WAY, DEUTSCH, DT, GRAY/FLANGE	1
6-	54255GT	LOCK, RECEP 12WAY, 14-18GA	1
7	73733GT	CONN, RECEP, 12 WAY, DEUTSCH, DT, BLACK/FLANGE	1
7-	54255GT	LOCK, RECEP 12WAY, 14-18GA	1
8	119058GT	CONN, PLUG, 4 WAY, DEUTSCH, DT, ENDCAP	1
8-	60429GT	LOCK, PLUG 4WAY, 14-18GA	1
9	119059GT	CONN PLUG 6 WAY ENDCAP DT	1
9-	60431GT	LOCK, PLUG 6WAY, 14-18GA	1
10	119062GT	CONN, PLUG, 12 WAY, DEUTSCH, DT, BLACK	1
10-	60435GT	LOCK, PLUG 12WAY, 14-18GA, GRN	1
11	119063GT	CONN PLUG 12 WAY ENDCAP DT GR	1
11-	60435GT	LOCK, PLUG 12WAY, 14-18GA, GRN	1
12	119064GT	CONN PLUG 12 WAY ENDCAP DT BR	1
12-	60435GT	LOCK, PLUG 12WAY, 14-18GA, GRN	1
13	119061GT	CONN, PLUG, 12 WAY, DEUTSCH, DT, GRAY	1
13-	60435GT	LOCK, PLUG 12WAY, 14-18GA, GRN	1
14	34052GT	RELAY,SPDT,12V(AUTO) PLUG IN**	1
14-	34053GT	ASSY,RELAY SOCKET,AUTO***	1
15	119070GT	CONN,RECEP 12 WAY ENDCAP DT	1

1001.108C Harness, Cab, DANA

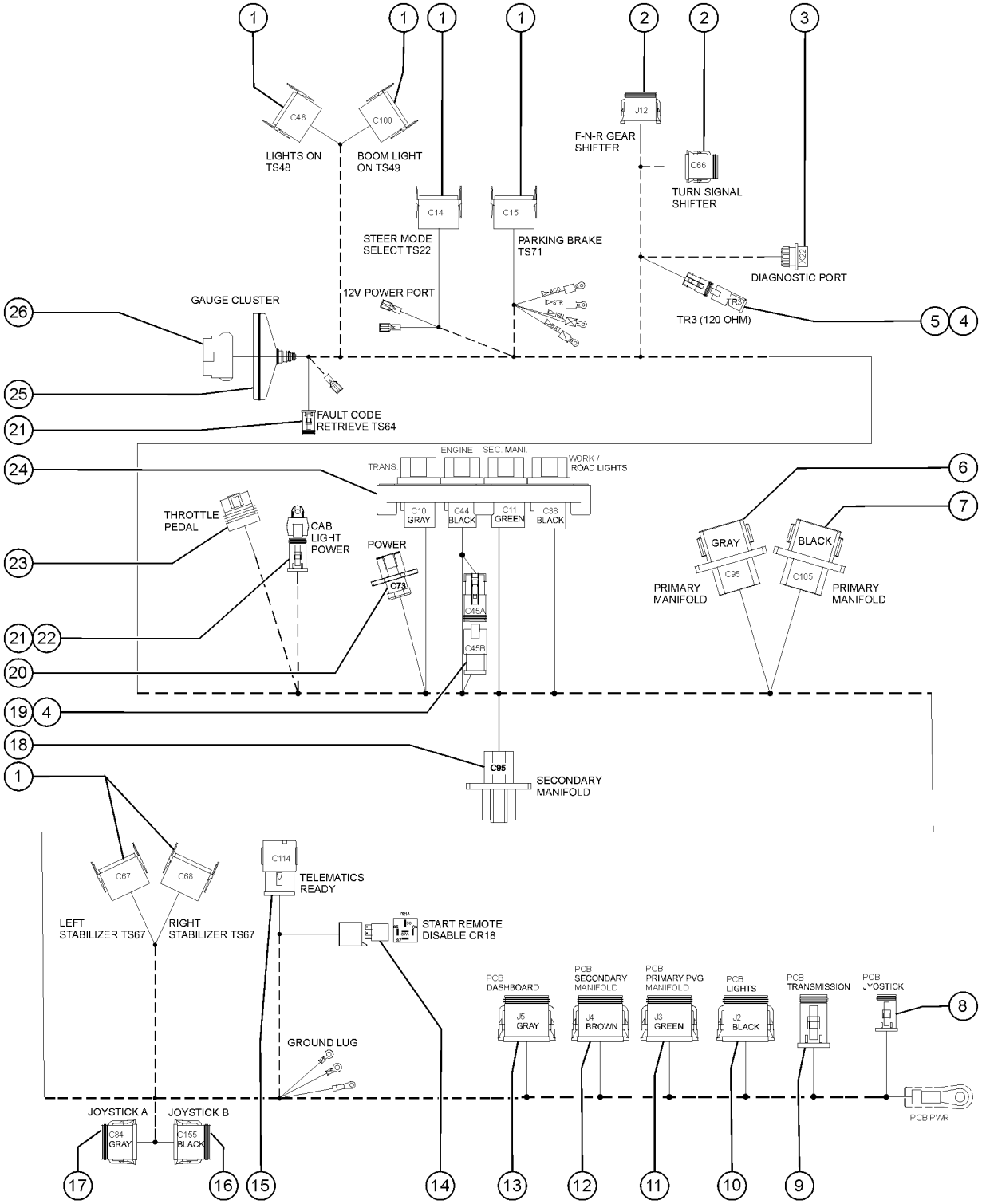

1001.108C Harness, Cab, DANA

Item	Part No.	Description	Qty.
15-	54255GT	LOCK, RECEP 12WAY, 14-18GA	1
16	106780GT	CONN, PLUG, 12 WAY, DEUTSCH, DTM, BLACK, KEY-B	1
16-	88332GT	LOCK,PLUG 12 WAY DTM 18-20GA	1
17	88331GT	CONN, PLUG, 12 WAY, DEUTSCH, DTM, GRAY, KEY-A	1
17-	88332GT	LOCK,PLUG 12 WAY DTM 18-20GA	1
18	73723GT	CONN RECEPT,FLANGED	1
18-	60443GT	LOCK, RECEP 4WAY, 14-18GA	1
19	119066GT	CONN, RECEP, 3 WAY, DEUTSCH, DT, ENDCAP	1
19-	60460GT	LOCK,RECEP 3 WAY,SAEJ1939	1
20	73717GT	CONN, RECEP, 4 WAY, DEUTSCH, DTP, FLANGE	1
20-	60526GT	LOCK,RECEP 4 WAY,12-14GA	1
21	119056GT	CONN, PLUG, 2 WAY, DEUTSCH, DT, ENDCAP	2
21	60425GT	CONN, PLUG, 2 WAY, DEUTSCH, DT, LOCK	2
22	229110GT	CONN, RECEP, 2 WAY, DEUTSCH, DT, CAP	1
23	1299252GT	CONN PLUG 6 WAY,METRIPACK 150.2,SEALED	1
24	73736GT	CONN,RECEP 48 WAY,4 X 12	1
24-	54255GT	LOCK, RECEP 12WAY, 14-18GA	4
25	822813GT	BOOT, GAUGE CLUSTER CONN,GTH	1
26	123436GT	CONN,PLUG,AMP, 1-640526-0	1

1001.109 Harness, ECM, EAT, DEUTZ,TCD3.6T4F

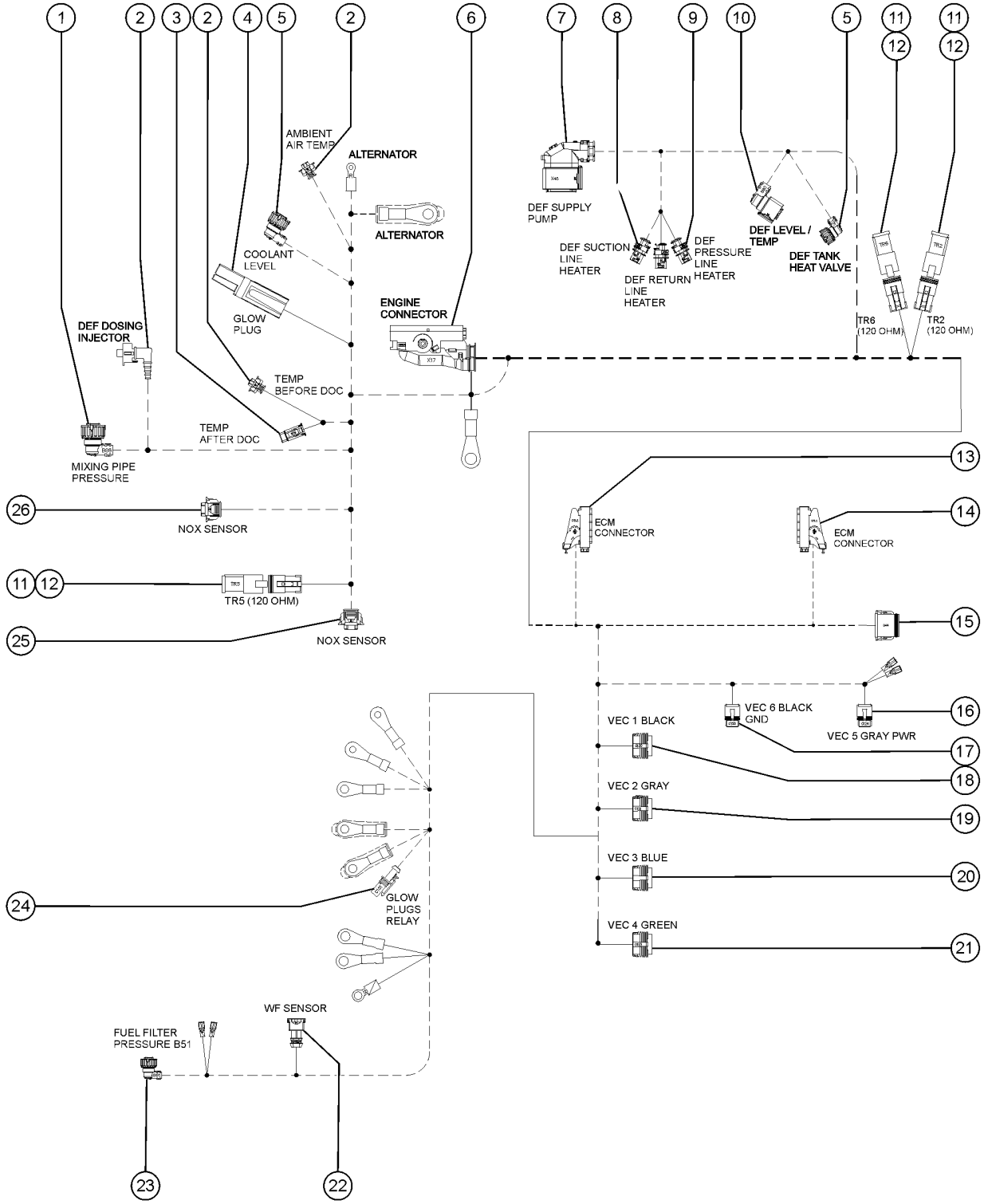

1001.109 Harness, ECM, EAT, DEUTZ,TCD3.6T4F

Item	Part No.	Description	Qty.
-	1290091GT	HARNESS,ECM,EAT,DEUTZ,TCD3.6T4F	1
1	1262451GT	CONN,CIRC,4WAY,AMP,GRAY	1
2	1262452GT	CONN,PLUG 2WAY,BOSCH KOMPAKT 1	3
3	1262459GT	CONN,PLUG 2WAY,DTMH 20GA,BLACK	1
4	1262854GT	CONN,1 WAY,ANDERSON PP75 CR,BK	1
5	822445GT	CONN,CIRC. AMP 4WAY,BLACK	3
6	822436GT	CONN,RECEP 62POS,AMP MCP1.5K/2.8	1
6-	822437GT	COVER,AMP 39/62POS CONNECTORS	1
7	1262726GT	CONN,PLUG 12WAY,AMP MCP1.5K,BLACK	1
8	1262724GT	CONN,RECEP 2WAY,AMP MCP2.8,GRA	2
9	1262723GT	CONN,RECEP 2WAY,AMP MCP2.8,BLA	1
10	1262460GT	CONN,PLUG 4WAY,AMP MCP2.8,BLAC	1
11	60452GT	CONN, RECEP, 3 WAY, DEUTSCH, DT, J1939/120OHM	3
12	119057GT	CONN, PLUG, 3 WAY, DEUTSCH, DT, ENDCAP	3
12-	60459GT	LOCK,PLUG 3 WAY,SAE J1939	3
13	1262732GT	CONN,PLUG 91WAY,BOSCH HPC,BLAC	5
13-	1262735GT	LOCK,PLUG 91WAY SIG, BOSCH HPC	1
13-	1262734GT	LOCK,PLUG 91WAY PWR, BOSCH HPC	1
14	1262733GT	CONN,PLUG 105WAY,BOSCH HPC,BLA	1
14-	1262736GT	LOCK,PLUG 105WAY, BOSCH HPC	1
15	1302942GT	CONN,PLUG,12 WAY,ENDCAP,DT,BK,20AWG	1
15-	60435GT	LOCK, PLUG 12WAY, 14-18GA, GRN	1
16	822468GT	CONN,2WAY CBT MALE,GRAY	1
16-	822469GT	LOCK,2WAY CBT TP2 SEALED	1
17	822467GT	CONN,2WAY CBT MALE,BLACK	1
17-	822469GT	LOCK,2WAY CBT TP2 SEALED	1
18	822464GT	CONN,8WAY CBT MALE,BLACK	1
18-	822466GT	LOCK,8WAY CBT TP2 SEALED	1

1001.109 Harness, ECM, EAT, DEUTZ,TCD3.6T4F

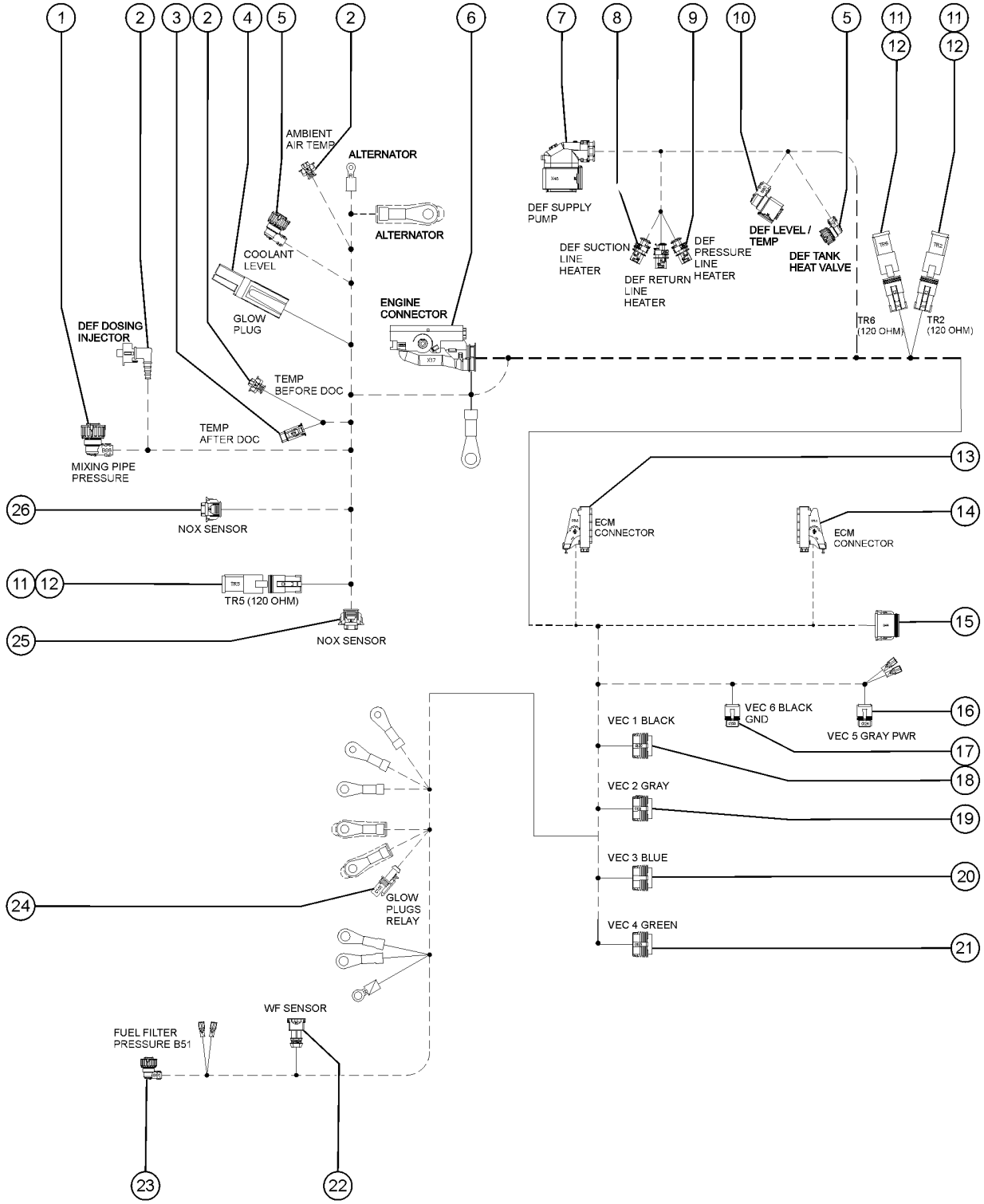

1001.109 Harness, ECM, EAT, DEUTZ,TCD3.6T4F

Item	Part No.	Description	Qty.
19	822465GT	CONN,8WAY CBT MALE,GRAY	1
19-	822466GT	LOCK,8WAY CBT TP2 SEALED	1
20	822462GT	CONN, PLUG, 8 WAY, EATON, METRI-PACK 150, BLUE	1
20-	822466GT	LOCK,8WAY CBT TP2 SEALED	1
21	822463GT	CONN,8WAY CBT MALE,GREEN	1
21-	822466GT	LOCK,8WAY CBT TP2 SEALED	1
22	56687GT	CONN, RECEP, 2 WAY, AMP, JR-PWR	1
23	822445GT	CONN,CIRC. AMP 4WAY,BLACK	1
24	1261711GT	CONN PLUG 2 WAY,LEAR MKR,SEALE	1
24-	1261712GT	SEC LOCK,LEAR MKR, 2 WAY	1
25	1262455GT	CONN,PLUG 4WAY,BOSCH KOMPAKT 1	1
26	1262457GT	CONN,PLUG 4WAY,BOSCH KOMPAKT 1	1

1001.109B Harness, ECM, DEUTZ, TCD3.6

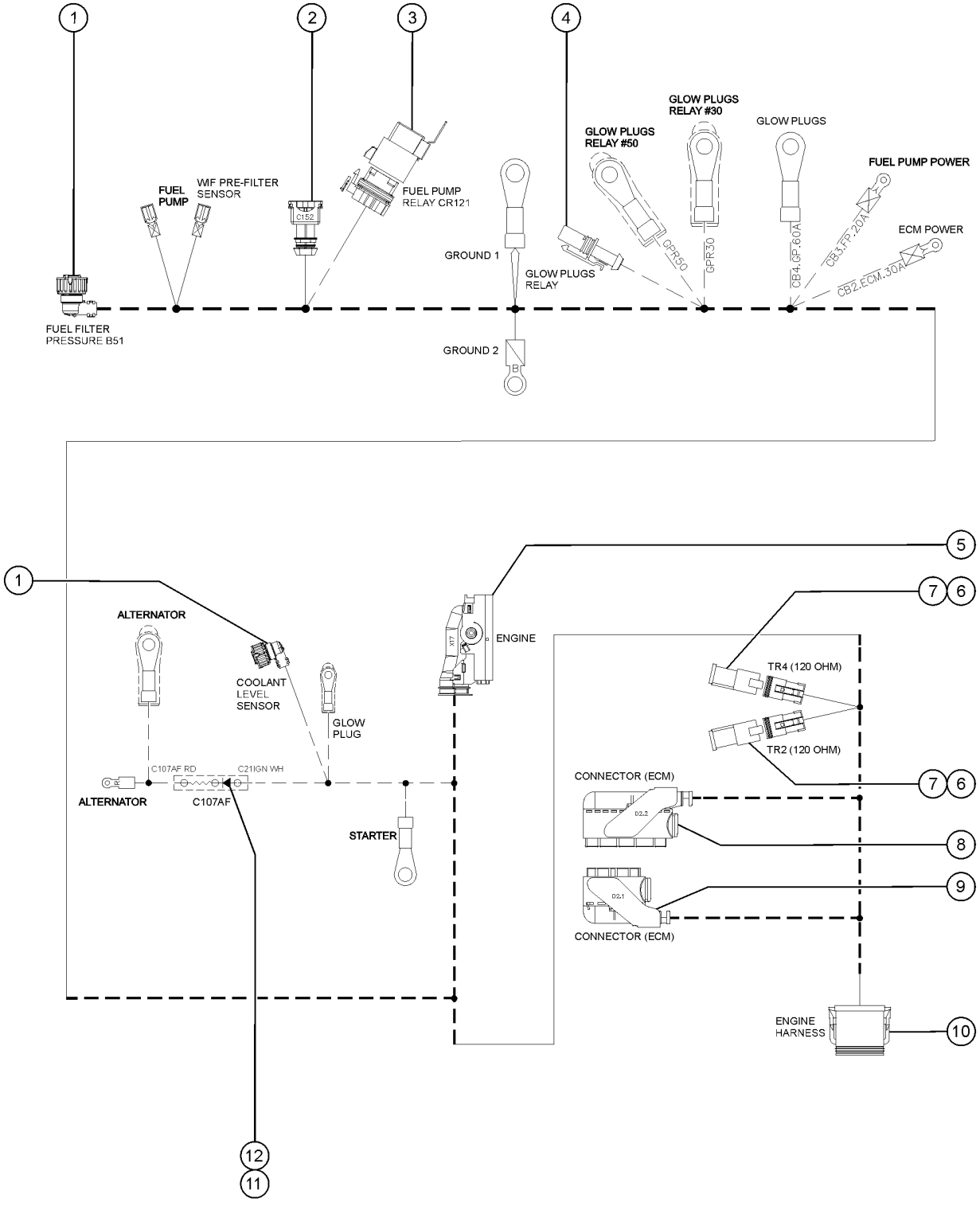

1001.109B Harness, ECM, DEUTZ, TCD3.6

Item	Part No.	Description	Qty.
-	1291451GT	HARNESS,ECM,DEUTZ,TCD3.6	1
1	822445GT	CONN,CIRC. AMP 4WAY,BLACK	2
2	56687GT	CONN, RECEP, 2 WAY, AMP, JR-PWR	1
3	60521GT	RELAY,SEALED 30/40 AMP	1
3-	1261818GT	LOCK, CPA AXIAL,GRN, DELPHI	1
4	1261711GT	CONN PLUG 2 WAY,LEAR MKR,SEALE	1
4-	1261712GT	SEC LOCK,LEAR MKR, 2 WAY	1
5	822436GT	CONN,RECEP 62POS,AMP MCP1.5K/2.8	1
5-	822437GT	COVER,AMP 39/62POS CONNECTORS	1
6	60452GT	CONN, RECEP, 3 WAY, DEUTSCH, DT, J1939/120OHM	2
7	119057GT	CONN, PLUG, 3 WAY, DEUTSCH, DT, ENDCAP	2
7-	60459GT	LOCK,PLUG 3 WAY,SAE J1939	2
8	822439GT	CONN KIT,94POS,AMP MQS1.5/MCP2.8	1
9	822438GT	CONN KIT,RECEP 60POS,AMP MQS 1.5	1
10	119062GT	CONN, PLUG, 12 WAY, DEUTSCH, DT, BLACK	1
10-	60435GT	LOCK, PLUG 12WAY, 14-18GA, GRN	1
11	1261880GT	RESISTOR, 40 OHM, 4W, 5%	1
12	1252025GT	DIODE,1N4007,1A,1000V	1

1001.110 Harness, PCB Ground



1001.110 Harness, PCB Ground

Item	*Part No.*	*Description*	*Qty.*
-	237933GT	HARNESS, PCB GROUND	1

1001.112 Harness, Power, Dome Light



1001.112 Harness, Power, Dome Light

Item	*Part No.*	*Description*	*Qty.*
-	233940GT	HARNESS, POWER, DOME LIGHT	1
1	119056GT	CONN, PLUG, 2 WAY, DEUTSCH, DT, ENDCAP	2
1-	60425GT	CONN, PLUG, 2 WAY, DEUTSCH, DT, LOCK	2

1001.113 Harness, Power, Beacon Light

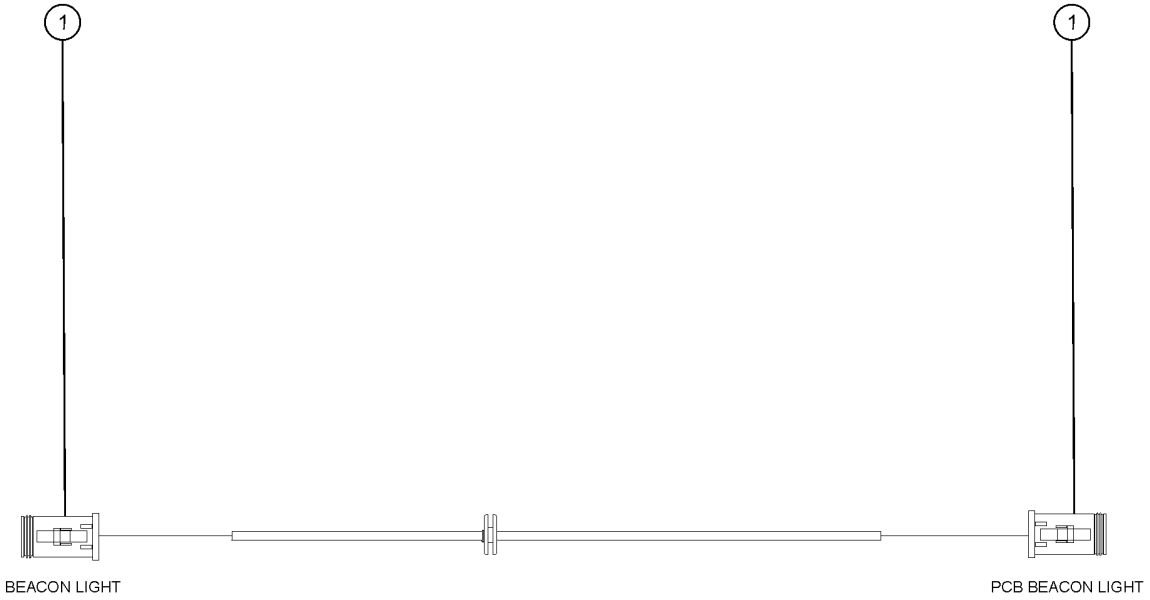

Item	*Part No.*	*Description*	*Qty.*
-	229682GT	HARNESS, POWER, BEACON LIGHT	1
1	119056GT	CONN, PLUG, 2 WAY, DEUTSCH, DT, ENDCAP	2
1-	60425GT	CONN, PLUG, 2 WAY, DEUTSCH, DT, LOCK	2

1001.114 Harness, Boom Light Power

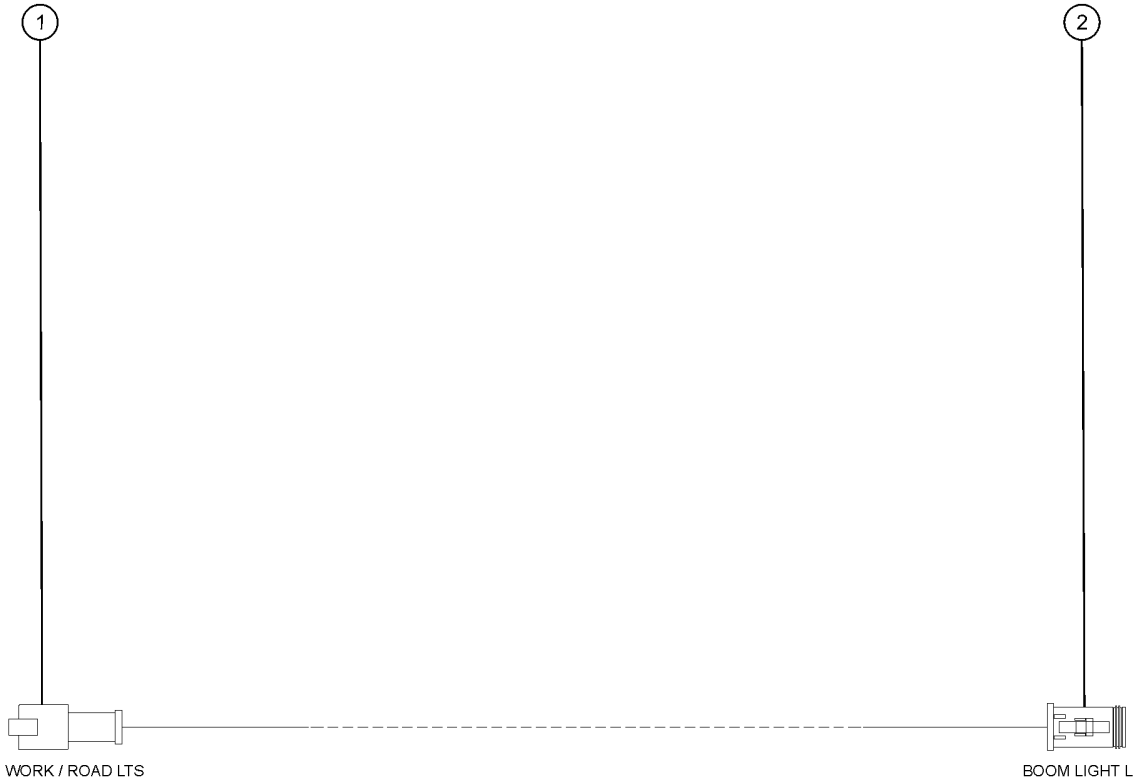

1001.114 Harness, Boom Light Power

Item	*Part No.*	*Description*	*Qty.*
-	1263760GT	HARNESS, BOOM LIGHT POWER	1
1	119065GT	CONN, RECEP, 2 WAY, DEUTSCH, DT	1
1-	60439GT	CONN, RECEP, 2 WAY, DEUTSCH, DT, LOCK	1
2	119056GT	CONN, PLUG, 2 WAY, DEUTSCH, DT, ENDCAP	1
2-	60425GT	CONN, PLUG, 2 WAY, DEUTSCH, DT, LOCK	1

1001.115 Harness, Primary PVG Manifold

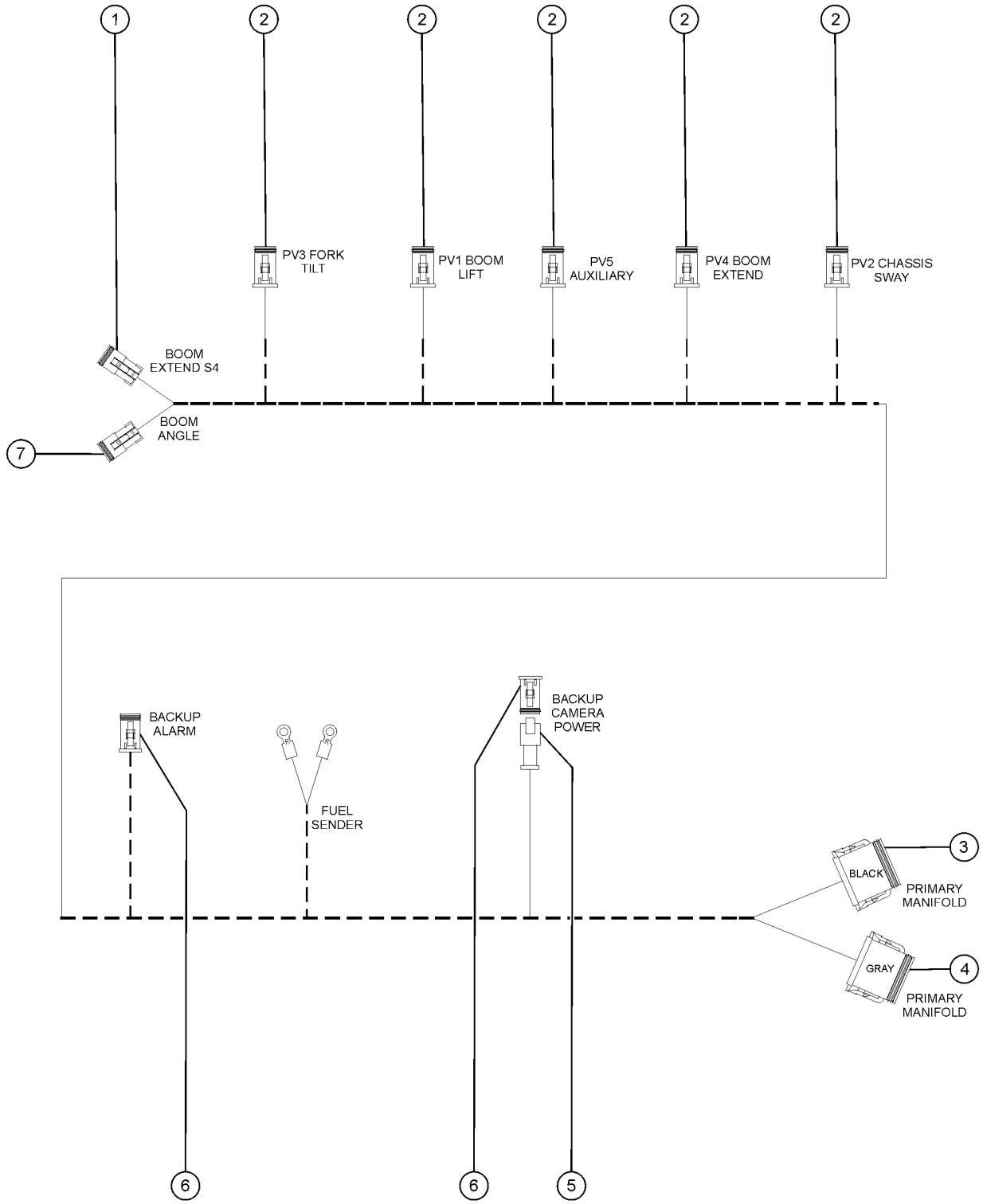

1001.115 Harness, Primary PVG Manifold

Item	*Part No.*	*Description*	*Qty.*
-	1287857GT	HARNESS, PRIMARY PVG MANIFOLD	1
1	119057GT	CONN, PLUG, 3 WAY, DEUTSCH, DT, ENDCAP	1
1-	60459GT	LOCK,PLUG 3 WAY,SAE J1939	1
2	119058GT	CONN, PLUG, 4 WAY, DEUTSCH, DT, ENDCAP	5
2-	60429GT	LOCK, PLUG 4WAY, 14-18GA	5
3	119062GT	CONN, PLUG, 12 WAY, DEUTSCH, DT, BLACK	1
3-	60435GT	LOCK, PLUG 12WAY, 14-18GA, GRN	1
4	119061GT	CONN, PLUG, 12 WAY, DEUTSCH, DT, GRAY	1
4-	60435GT	LOCK, PLUG 12WAY, 14-18GA, GRN	1
5	119065GT	CONN, RECEP, 2 WAY, DEUTSCH, DT	1
5-	60439GT	CONN, RECEP, 2 WAY, DEUTSCH, DT, LOCK	1
6	119056GT	CONN, PLUG, 2 WAY, DEUTSCH, DT, ENDCAP	2
6-	60425GT	CONN, PLUG, 2 WAY, DEUTSCH, DT, LOCK	2
7	119057GT	CONN, PLUG, 3 WAY, DEUTSCH, DT, ENDCAP	1
7-	60427GT	CONN, PLUG, 3 WAY, DEUTSCH, DT, LOCK	1

1002.1 Wire Harnesss, View 2

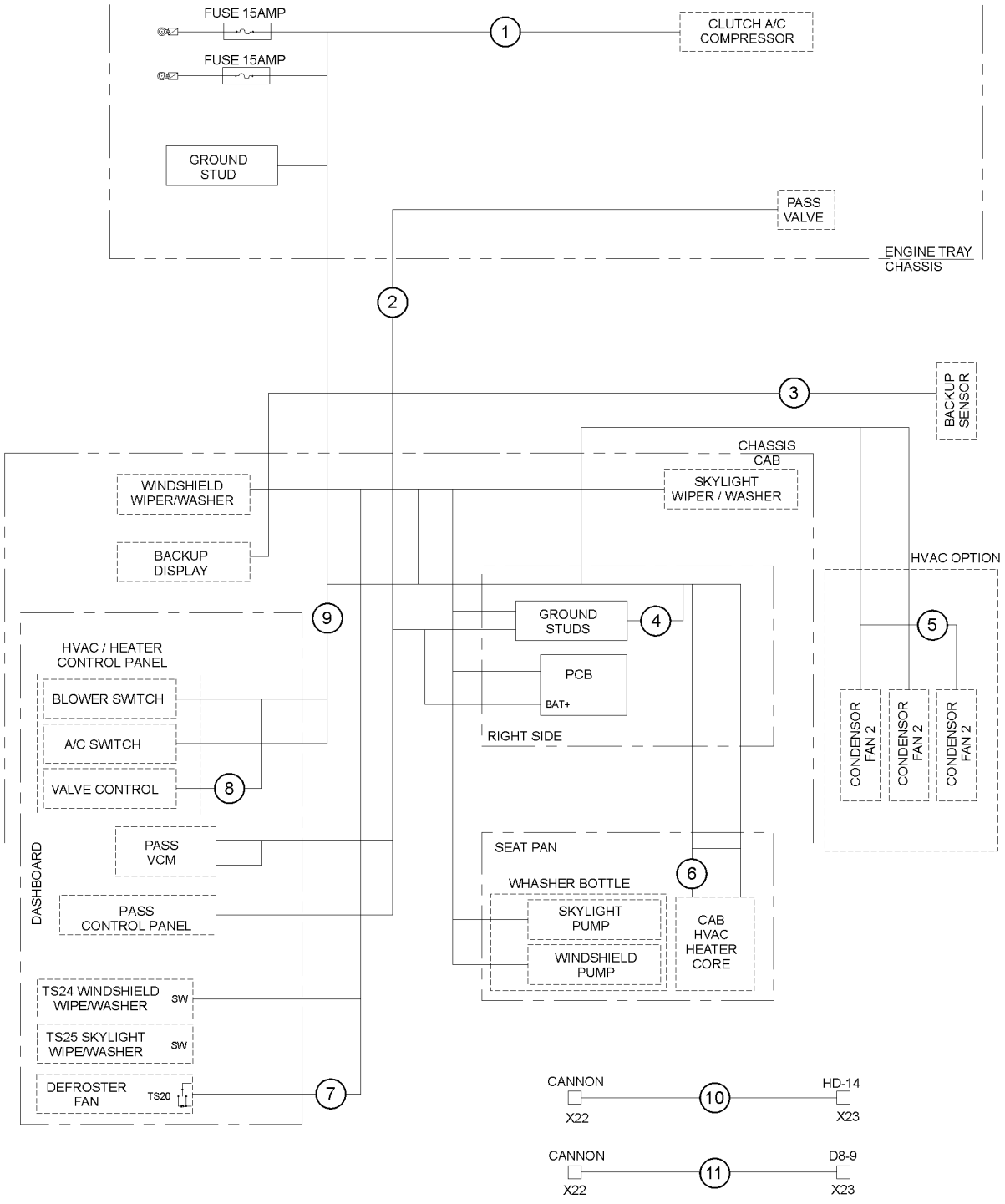

1002.1 Wire Harnesss, View 2

Item	Part No.	Description	Qty.
1	1301522GT	HARNESS, HVAC SPLIT, CAB (Refer to 1002.101)	1
2	1293818GT	HARNESS,UNIVERSAL,PASS (Refer to 1002.102)	1
3	1257991GT	HARNESS,REAR PROX ALARM,GTH	1
4	161444GT	ASSEMBLY, GROUND BUSS (Refer to 1002.104)	1
5	1300073GT	HARNESS, CONDENSER, REMOTE	1
6	1291678GT	HARNESS, HV BLOWER	1
6B	1297980GT	HARNESS,HVAC,EVAPORTATOR	1
7	1299474GT	HARNESS,ENCLOSED CAB,GTH (Refer to 1002.107)	1
8	1291683GT	HARNESS, HV CONTROLER	1
8B	1297981GT	HARNESS,HVAC,CONTROLLER	1
9	1299459GT	HARNESS, HV, CAB (Refer to 1002.109)	1
9B	1299807GT	HARNESS, HVAC, CAB (Refer to 1002.109B)	1
10	1294733GT	HARNESS,DIAGNOSTICS,CVT (Refer to 1002.110)	1
11	1294735GT	HARNESS,DIAGNOSTICS,GTH (Refer to 1002.111)	1

1002.101 Harness, HVAC Split, Cab

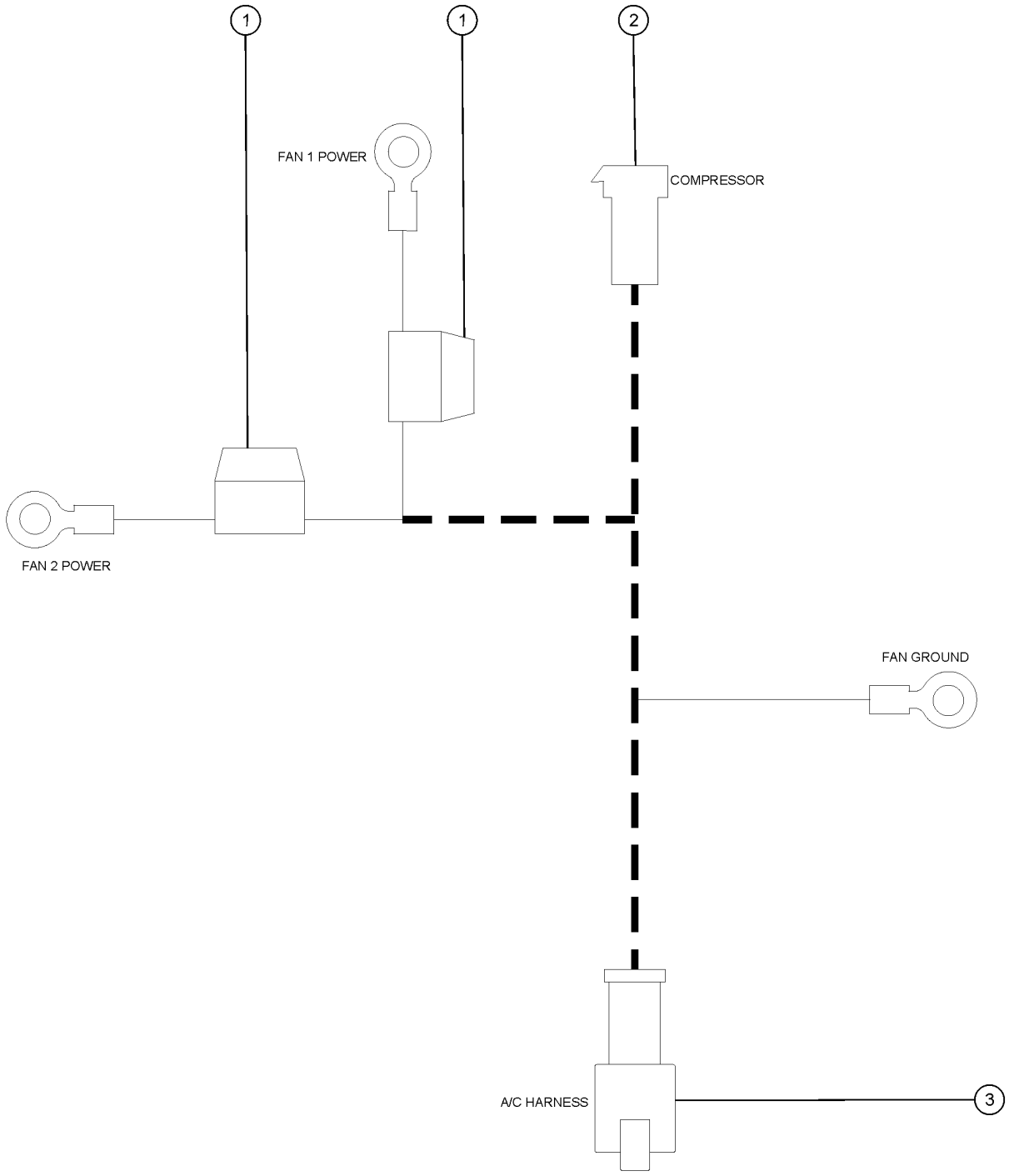

1002.101 Harness, HVAC Split, Cab

Item	Part No.	Description	Qty.
-	1301522GT	HARNESS, HVAC SPLIT, CAB	1
1	1299794GT	FUSEHOLDER, INLINE, ATO, COVERED	2
1-	1299795GT	FUSE, 15 AMP, ATO	2
2	1299793GT	CONN, RECEPTACLE, 1 WAY, 10-18GA, WP	1
3	1299771GT	CONN, RECEPTACLE, 4 WAY,12-14GA, GR	1
3-	60526GT	LOCK,RECEP 4 WAY,12-14GA	1

1002.102 Harness, Universal, Pass

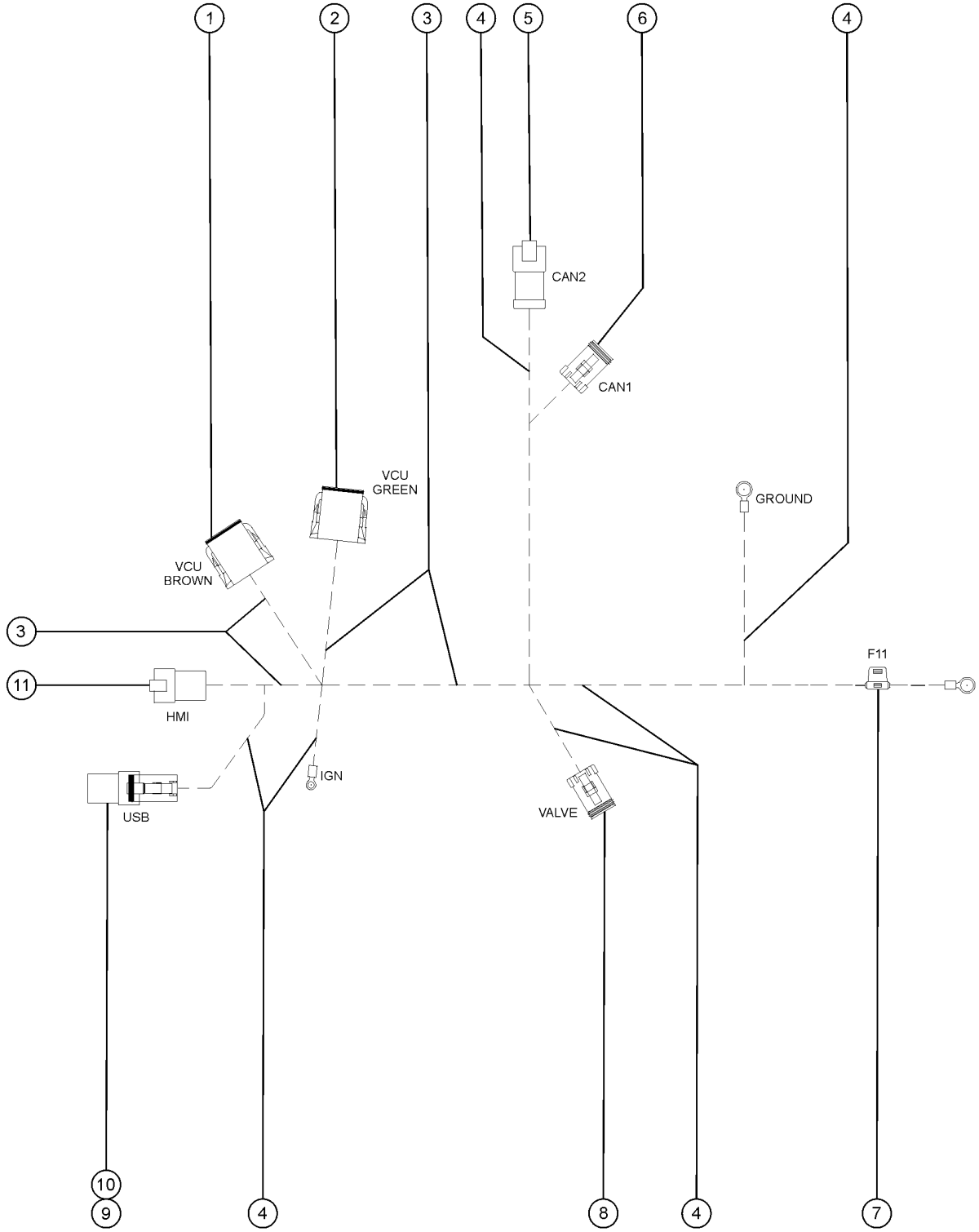

1002.102 Harness, Universal, Pass

Item	Part No.	Description	Qty.
-	1293818GT	HARNESS,UNIVERSAL,PASS	1
1	1258100GT	CONN,PLUG 12D WAY DTM 18-20GA	1
1-	88332GT	LOCK,PLUG 12 WAY DTM 18-20GA	1
2	822250GT	CONN,PLUG 12C WAY DTM 18-20GA	1
2-	88332GT	LOCK,PLUG 12 WAY DTM 18-20GA	1
3	39908GT	WIRE LOOM,1/2 DIA.	
4	20973GT	WIRE LOOM,3/8 POLY SLIT	
5	119066GT	CONN, RECEP, 3 WAY, DEUTSCH, DT, ENDCAP	1
5-	60460GT	LOCK,RECEP 3 WAY,SAEJ1939	1
6	119057GT	CONN, PLUG, 3 WAY, DEUTSCH, DT, ENDCAP	1
6-	60459GT	LOCK,PLUG 3 WAY,SAE J1939	1
7	67504GT	FUSE HOLDER,ATC 3-30 AMPS	1
7-	67505GT	FUSE,10 AMP,ATC	1
8	60428GT	CONN, PLUG 4WAY, 14-18GA	1
8-	60429GT	LOCK, PLUG 4WAY, 14-18GA	1
9	1277904GT	CONN, PLUG, 4 WAY, DEUTSCH, DTM	1
9-	1277905GT	CONN, PLUG, 4 WAY, DEUTSCH, DTM, LOCK	1
10	1277906GT	CONN, RECEP, 4 WAY, DTM	1
10-	1277907GT	LOCK, RECEP, 4 WAY, DTM	1
11	T112536GT	CONN, RECEP 3 WAY DTM, 16-24 GA	1
11-	T112537GT	LOCK,RECEP 3 WAY DTM,16-24GA	1

1002.104 Assembly, Ground Buss

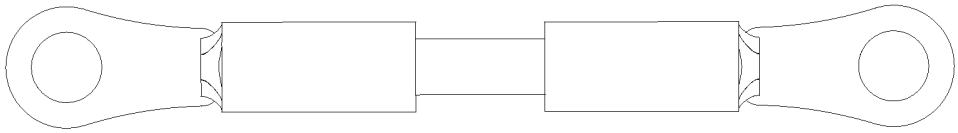

1002.104 Assembly, Ground Buss

Item	*Part No.*	*Description*	*Qty.*
-	161444GT	ASSEMBLY, GROUND BUSS	1

1002.107 Harness, Enclosed Cab, GTH

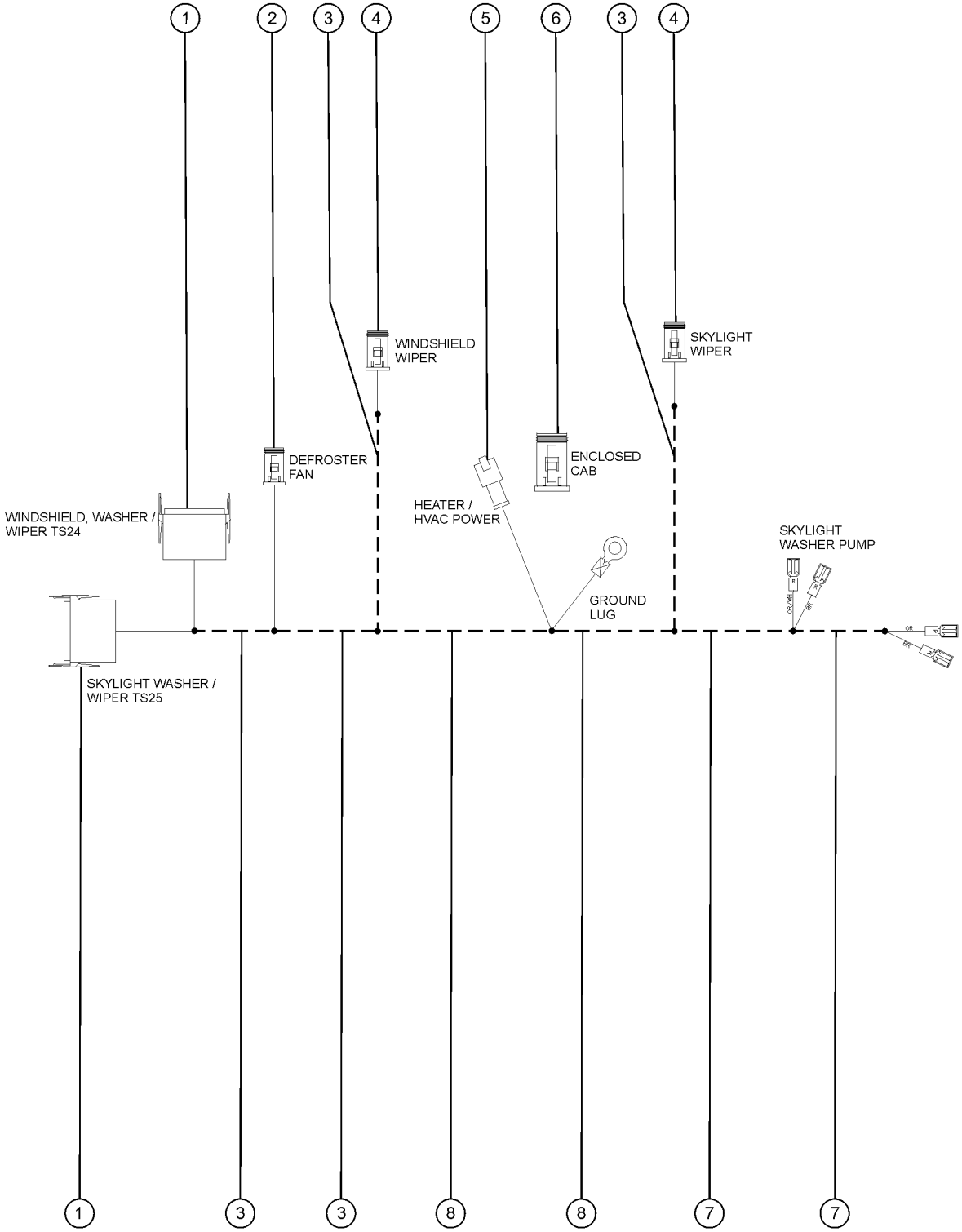

1002.107 Harness, Enclosed Cab, GTH

Item	*Part No.*	*Description*	*Qty.*
-	1299474GT	HARNESS,ENCLOSED CAB,GTH	1
1	130157GT	CONNECTOR,L-SERIES,SWITCH	2
2	119056GT	CONN, PLUG, 2 WAY, DEUTSCH, DT, ENDCAP	1
2-	60425GT	CONN, PLUG, 2 WAY, DEUTSCH, DT, LOCK	1
3	39908GT	WIRE LOOM,1/2 DIA.	115 Inches
4	119058GT	CONN, PLUG, 4 WAY, DEUTSCH, DT, ENDCAP	2
4-	60429GT	LOCK, PLUG 4WAY, 14-18GA	2
5	119065GT	CONN, RECEP, 2 WAY, DEUTSCH, DT	1
5-	60439GT	CONN, RECEP, 2 WAY, DEUTSCH, DT, LOCK	1
6	119059GT	CONN PLUG 6 WAY ENDCAP DT	1
6-	60431GT	LOCK, PLUG 6WAY, 14-18GA	1
7	75640GT	WIRE LOOM,3/4 DIA.	70 Inches
8	47601GT	WIRE LOOM,5/8 DIA.SLIT	52 Inches

1002.109 Harness, HV, Cab

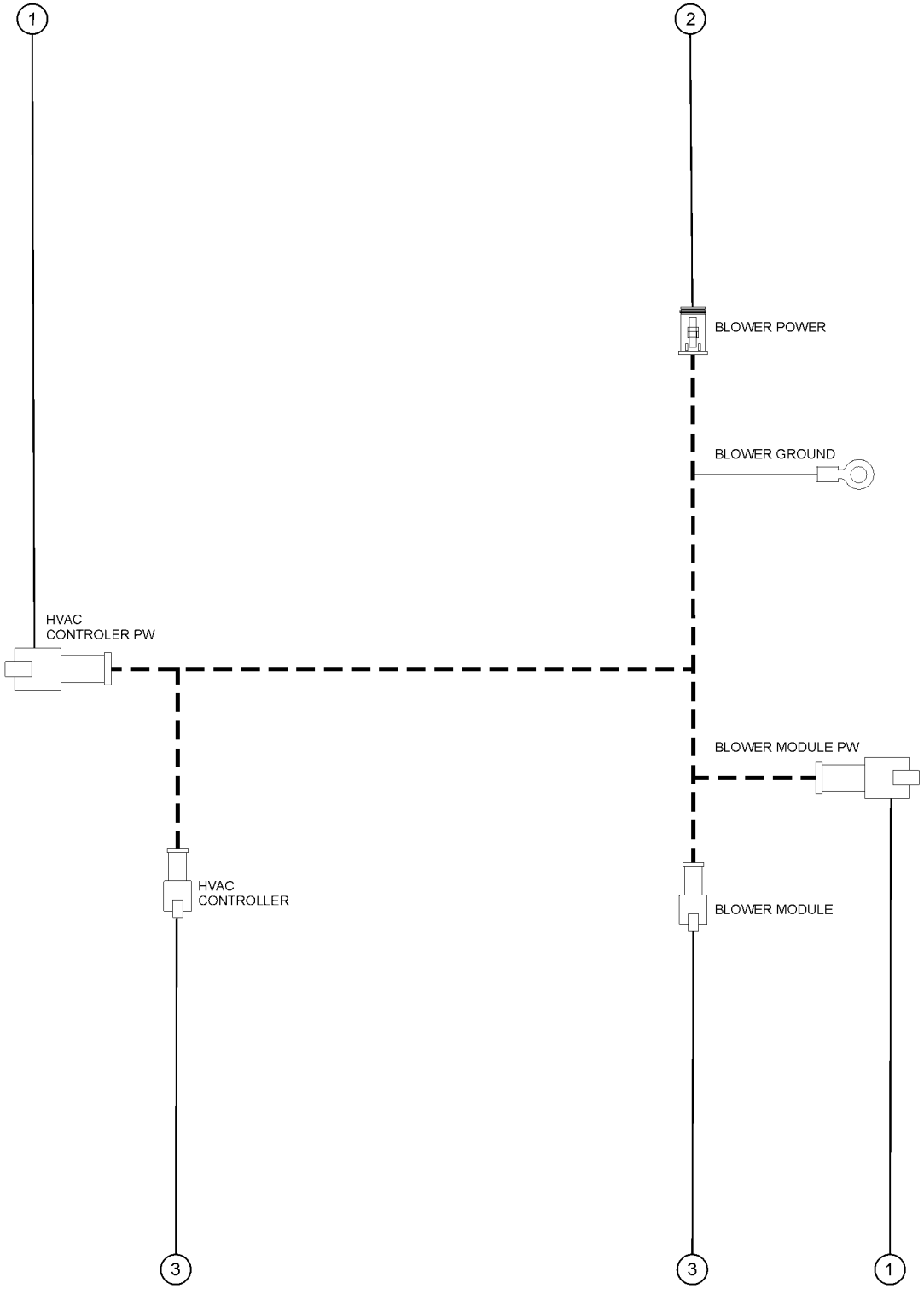

1002.109 Harness, HV, Cab

Item	*Part No.*	*Description*	*Qty.*
-	1299459GT	HARNESS, HV, CAB	1
1	1299771GT	CONN, RECEPTACLE, 4 WAY,12-14GA, GR	2
1-	60526GT	LOCK,RECEP 4 WAY,12-14GA	2
2	119056GT	CONN, PLUG, 2 WAY, DEUTSCH, DT, ENDCAP	1
2-	60425GT	CONN, PLUG, 2 WAY, DEUTSCH, DT, LOCK	1
3	1299773GT	CONN, RECEPTACLE, 4 WAY, 14-18GA, GR	2
3-	60443GT	LOCK, RECEP 4WAY, 14-18GA	2

1002.109B Harness, HVAC, Cab

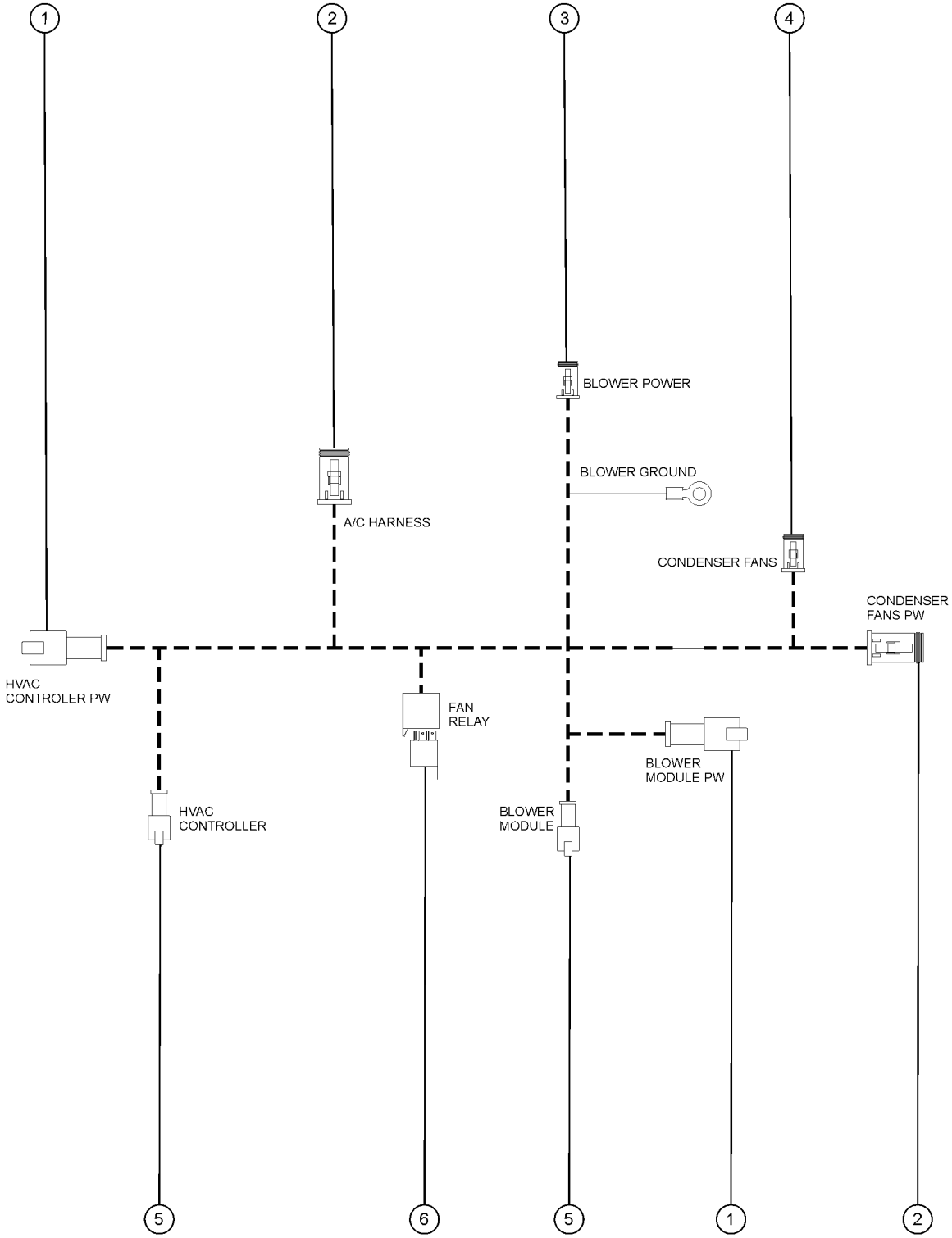

1002.109B Harness, HVAC, Cab

Item	Part No.	Description	Qty.
-	1299807GT	HARNESS, HVAC, CAB	1
1	1299771GT	CONN, RECEPTACLE, 4 WAY,12-14GA, GR	2
1-	60526GT	LOCK,RECEP 4 WAY,12-14GA	2
2	1299770GT	CONN, PLUG, 4 WAY, 12-14GA, GR	2
2-	60528GT	LOCK,PLUG 4 WAY,12-14GA***	2
3	119056GT	CONN, PLUG, 2 WAY, DEUTSCH, DT, ENDCAP	1
3-	60425GT	CONN, PLUG, 2 WAY, DEUTSCH, DT, LOCK	1
4	1299772GT	CONN, PLUG, 2 WAY, 14-18GA, GR	1
4-	60425GT	CONN, PLUG, 2 WAY, DEUTSCH, DT, LOCK	1
5	1299773GT	CONN, RECEPTACLE, 4 WAY, 14-18GA, GR	2
5-	60443GT	LOCK, RECEP 4WAY, 14-18GA	2
6	1270945GT	RELAY,SPDT,12V(AUTO),20/30A	1
6-	1299781GT	SOCKET, RELAY, AUTO	1

1002.110 Harness, Diagnostics, CVT

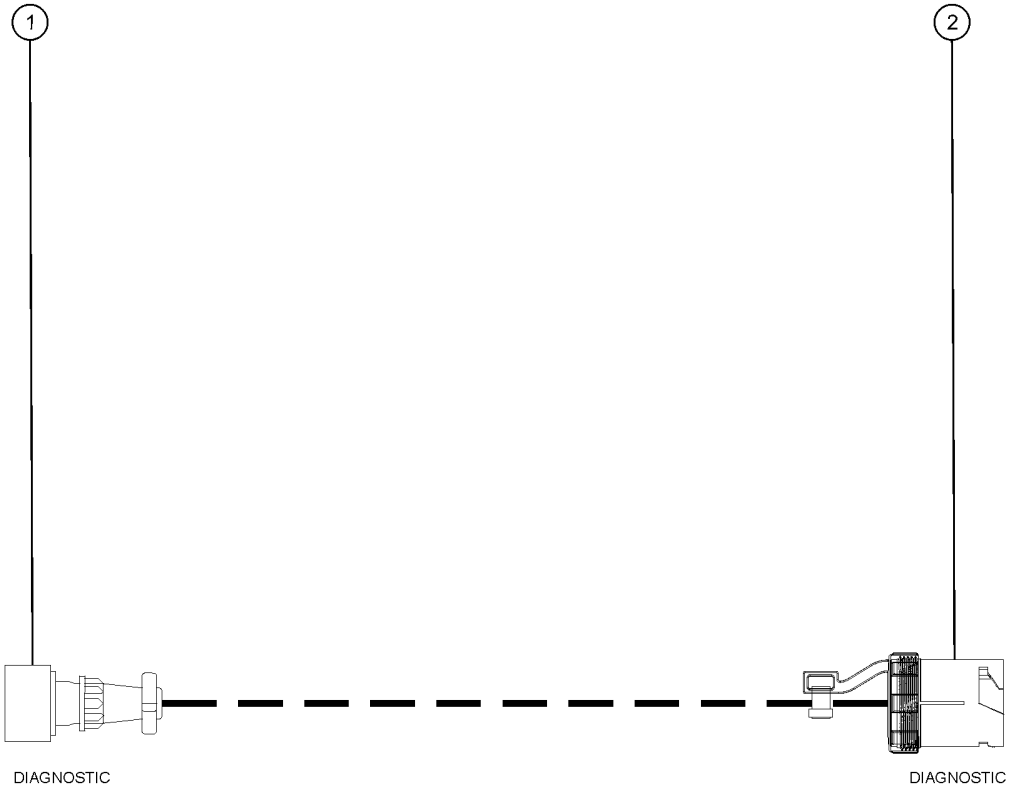

1002.110 Harness, Diagnostics, CVT

Item	*Part No.*	*Description*	*Qty.*
-	1294733GT	HARNESS,DIAGNOSTICS,CVT	1
1	1283273GT	CONN,PLUG,CANN TR 12WAY,SIZE13	1
2	1298934GT	CONN,RECEP 9 WAY,HD,GR	1

1002.111 Harness, Diagnostics, GTH

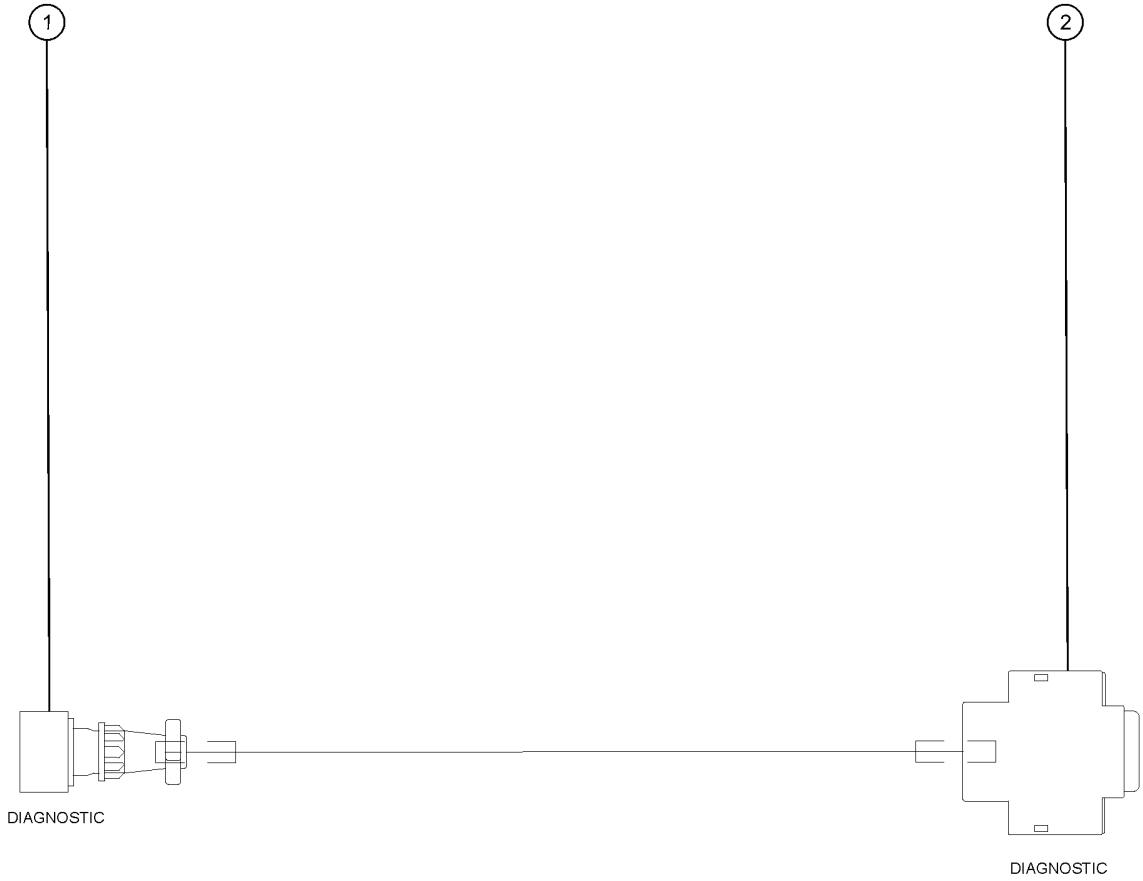

1002.111 Harness, Diagnostics, GTH

Item	Part No.	Description	Qty.
-	1294735GT	HARNESS,DIAGNOSTICS,GTH	1
-	1284247GT	HARNESS, DIAGNOSTIC DISPLAY, GTH	1
1	1283273GT	CONN,PLUG,CANN TR 12WAY,SIZE13	1
2	119608GT	CONN,DB9,FEMALE,SOLDER	1

Part no.	Page Number
5-2137GT	353, 357
6-6243-06GT	345, 347, 351, 357
7-109-14GT	15
7-125-05GT	211, 221
7-125-06GT	387
7-126-04GT	167, 169
7-126-05GT	169
7-126-30GT	169
7-126-33GT	169
7-126-54GT	195
7-126-60GT	195
7-126-208GT	179
7-126-234GT	173
7-126-265GT	169
7-126-277GT	173
7-126-307GT	191
7-126-350GT	179
7-126-351GT	195
7-126-355GT	167
7-126-356GT	169
7-126-357GT	169
7-126-359GT	169
7-126-361GT	179
7-126-362GT	179
7-126-365GT	191, 199
7-126-366GT	197
7-126-369GT	191
7-126-371GT	193
7-126-381GT	187
7-126-383GT	195
7-126-385GT	167
7-126-387GT	167, 169
7-126-388GT	167
7-126-389GT	167
7-126-391GT	167, 169, 179, 197
7-126-399GT	169
7-126-400GT	169
7-126-401GT	169
7-126-402GT	169
7-126-403GT	169
7-126-404GT	169
7-126-405GT	169
7-126-409GT	171
7-126-411GT	173
7-126-412GT	173
7-126-413GT	173
7-126-414GT	173
7-126-415GT	173
7-126-416GT	173
7-126-417GT	177
7-126-418GT	173
7-126-419GT	173
7-126-420GT	173
7-126-421GT	173
7-126-423GT	175, 183, 187
7-126-424GT	175, 183
7-126-428GT	175, 191
7-126-429GT	175, 185
7-126-431GT	175, 181
7-126-434GT	177
7-126-435GT	177
7-126-437GT	177
7-126-438GT	177
7-126-439GT	177
7-126-442GT	179
7-126-443GT	179
7-126-444GT	179
7-126-445GT	179
7-126-446GT	179
7-126-448GT	179
7-126-458GT	181
7-126-459GT	181
7-126-460GT	181
7-126-461GT	181
7-126-464GT	181
7-126-466GT	183
7-126-468GT	183, 185, 187
7-126-469GT	183
7-126-470GT	187
7-126-471GT	187
7-126-472GT	183, 185, 187
7-126-473GT	183, 185, 187
7-126-474GT	183, 185, 187
7-126-475GT	183, 185, 187
7-126-476GT	183, 185, 187
7-126-477GT	183, 185, 187
7-126-478GT	183, 185, 187
7-126-479GT	183, 185, 187
7-126-480GT	183, 187
7-126-481GT	183, 187
7-126-482GT	183
7-126-484GT	185
7-126-485GT	185, 187
7-126-486GT	185
7-126-487GT	185
7-126-489GT	185
7-126-490GT	185
7-126-491GT	185
7-126-492GT	185, 191
7-126-495GT	187
7-126-496GT	187
7-126-497GT	187
7-126-498GT	187
7-126-506GT	193
7-126-507GT	193
7-126-516GT	195
7-126-518GT	173
7-126-684GT	179
7-126-688GT	167
7-126-768GT	193
7-126-777GT	193
7-126-779GT	193
7-144-09GT	237
7-147-41GT	211
7-229-546GT	109
7-229-561GT	95
7-229-562GT	95
7-229-564GT	95
7-229-566GT	95
7-229-592GT	97, 115
7-229-620GT	121
7-229-623GT	95
7-229-662GT	91
7-229-663GT	91
7-229-664GT	91
7-229-665GT	91

Part no.	Page Number
7-229-731GT	93
7-229-768GT	197
7-229-773GT	91
7-229-781GT	91
7-229-792GT	91
7-229-796GT	91
7-229-804GT	93
7-229-805GT	93
7-229-809GT	95
7-229-813GT	95
7-229-814GT	95
7-229-815GT	95
7-229-819GT	95
7-229-821GT	95
7-229-831GT	97, 113
7-229-926GT	89
7-229-938GT	97
7-234-04GT	329
7-269-125GT	407
7-273-27GT	331
7-319-17GT	45, 53
07.0709.0419GT	103
07.0709.0584GT	179
07.0709.0747GT	95
1268GT	13
1484GT	13
1702-2400GT	255, 275, 297, 315
1702GT	393
5397GT	85, 87
6578GT	85, 87, 275
11890GT	229
18605GT	51
18666GT	207
19273GT	255, 275, 297, 315
19843GT	61, 67
20973GT	415, 417, 465
21465GT	259, 283, 301, 319
22283GT	55
22571GT	389
24514GT	201
25368GT	243, 289, 305
27581GT	13
28159GT	21, 23, 31, 33
28443GT	253, 365
28750GT	13
29557GT	261, 263, 303, 321
29868GT	61, 67, 203, 207, 211, 221...
30370GT	325
30973GT	51
32150GT	13
32151GT	13
33555GT	55
33784GT	243, 271, 291, 305
33994GT	13
34052GT	213, 221, 399, 407, 433. 437...
34053GT	433, 437, 441
35434GT	287, 297, 309, 315
36206GT	399
36456GT	53, 61, 67, 77, 79, 81...
38149GT	17, 19
39542GT	211
39908GT	417, 465, 469
42077GT	285
42726GT	399
43392GT	227, 229, 233
44723GT	329
44743GT	201
44909GT	253, 273, 285, 295, 313
45470GT	221
46131GT	239, 253, 273, 285, 295. 313...
46718GT	237, 395, 397
47478GT	81, 83, 223, 231, 283
47601GT	469
48762-5100GT	315
48762-5500GT	275
48762-6500GT	275
48762-9500GT	315
48773-1150GT	85, 87
48773-9600GT	253
48841GT	255, 275, 315
48845GT	315
48846GT	255, 275, 315
48875GT	369, 377
48904GT	331, 367, 375
48905GT	331, 367, 371
48911GT	377
48912GT	369, 375
48913GT	377
48915GT	369, 375
48916GT	367, 375
48920GT	375
48926GT	331
48927GT	369
48929GT	329
48930GT	329, 367, 371
48933GT	371, 375
48946GT	369, 371
48947GT	375
48952GT	371
48960GT	371
48963GT	297
48975GT	373
48983GT	377
48984GT	371, 375
48985GT	375
49116-15800GT	367
49117-3800GT	331
49117-8035GT	375
49117-14600GT	367
49117-16800GT	375
49119-3000	377
49119-5000GT	367
49119-5200GT	375
49120-3000	377
49126-6400GT	369
49128-1450GT	367
49128-1600GT	367
49128-1700GT	367
49128-1800GT	367
49128-2460GT	331
49128-4610GT	331
49128-6000GT	367
49128-6400GT	367
49128-11859GT	367
49128-14600GT	367
49130-3500GT	325

Part no.	Page Number
49130-3900GT	367
49130-4100GT	367
49130-4400GT	367
49130-5000GT	367
49130-5500GT	375
49130-5800GT	367
49130-7200GT	329
49130-9500GT	375
49130-11700GT	367
49130-16000GT	367
49131-22100GT	367
49138-1700GT	371
49141-1650GT	371
49141-1700GT	371
49163-2000GT	367
49183-3700GT	371
49183-4900GT	371
49183-5100GT	371
49183-7400GT	371
49183-7800GT	375
49183-14800GT	375
49379GT	389
49381GT	249, 291, 309
49408GT	389
49410GT	249, 291, 309
49519GT	375
49612GT	13
49613GT	13
49863GT	291, 305
49924GT	15, 259, 279, 301, 319
53471GT	241
54255GT	433, 435, 437, 439, 441. 443
54283GT	375
55517GT	55
56687GT	447, 449
56912GT	45, 59, 67, 77, 79, 81...
57072GT	57
60425GT	413, 415, 417, 419, 421. 429...
60427GT	417, 421, 459
60428GT	465
60429GT	417, 421, 429, 433, 437. 441...
60431GT	433, 437, 441, 469
60433GT	433, 437, 441
60435GT	415, 417, 421, 427, 429. 431...
60439GT	419, 457, 459, 469
60443GT	413, 435, 439, 443, 471. 473
60452GT	433, 437, 441, 445, 449
60459GT	433, 435, 437, 441, 445. 449...
60460GT	435, 439, 443, 465
60521GT	253, 295, 313, 449
60526GT	435, 439, 443, 463, 471. 473
60527GT	427, 429, 431
60528GT	427, 429, 431, 473
60584GT	229
60875-2963GT	243, 263, 291, 305
60875GT	57
61072-5400GT	315
61072-8700GT	297
61072-9500GT	297
61073-5500GT	255, 275
61073-6500GT	255, 275
61073-9500GT	297, 315
61264GT	369
62822GT	221
65879GT	381
66399GT	13
67349GT	243, 289, 305
67504GT	465
67505GT	465
69773-600GT	79
69773GT	77, 387
71911GT	245, 271, 287, 307
73717GT	435, 439, 443
73723GT	435, 439, 443
73730GT	433, 437, 441
73733GT	433, 437, 441
73736GT	435, 439, 443
74902GT	379
75042GT	373
75185GT	389
75640GT	469
77051GT	37, 39, 41, 43, 71, 75...
78086GT	211
78546GT	61, 67
78736GT	85, 87
79579GT	345
80220GT	219
81510GT	427
81578GT	63, 69
82366GT	21, 23, 29
82558GT	17, 19
82560GT	27, 29, 31, 33
87075GT	211
87085GT	213
87188GT	63, 69
87684GT	297, 315
88331GT	435, 439, 443
88332GT	435, 439, 443, 465
88354GT	375
88406GT	201
93500GT	13
97488GT	13
97602GT	17, 19
99087GT	415, 417
101562GT	359
105759GT	213
106545GT	359
106780GT	435, 439, 443
106817-2300GT	371
107746GT	379
108865GT	343
110149GT	211
110203GT	381
114090GT	25, 35
114115GT	25, 35
114379GT	17, 19, 21, 23, 27, 29...
117062GT	49
117090GT	37, 39
117104GT	37, 39
117125GT	49, 77, 79, 81, 83, 359
117312GT	85, 87
117344GT	37, 39
117379GT	15, 59, 65
117583GT	47
117655GT	383
117666GT	63, 69

Part no.	Page Number
117693GT	351
117764GT	13
117765GT	13
117774GT	353, 357
117777GT	347
117780GT	345
117809GT	369
119056GT	413, 415, 417, 419, 421, 429...
119057GT	411, 421, 433, 435, 437, 441...
119058GT	417, 421, 429, 433, 437, 441...
119059GT	433, 437, 441, 469
119060GT	433, 437, 441
119061GT	427, 429, 431, 433, 437, 441...
119062GT	433, 437, 441, 449, 459
119063GT	421, 433, 437, 441
119064GT	415, 417, 433, 437, 441
119065GT	419, 457, 459, 469
119066GT	435, 439, 443, 465
119067GT	413, 433
119070GT	435, 437, 441
119219-675GT	243, 263, 291, 305
119219-750GT	243, 263, 291, 305
119219-800GT	243, 263, 291, 305
119219-1863GT	243, 263, 291, 305
119219-2075GT	243, 263, 291, 305
119219-3400GT	243, 263, 291, 305
119608GT	477
122657GT	379
123108GT	203
123136GT	211
123139GT	201
123142GT	49
123150GT	53
123151GT	61, 67
123153GT	377
123168GT	351
123169GT	353, 357
123175GT	357
123176GT	49, 331, 357
123177GT	285
123180GT	331, 371
123181GT	331, 371
123184GT	351
123185GT	351
123186GT	351
123188GT	37, 49, 77, 79, 81, 83...
123189GT	81, 83, 201
123192GT	49
123198GT	221
123200GT	207
123201GT	207
123269GT	435
123270GT	213
123286GT	77, 79
123287GT	45
123436GT	435, 439, 443
123500GT	343
123538GT	285
123556GT	45, 77, 79
123561GT	213
123567GT	207, 209
123568GT	207
123569GT	209
123572GT	207, 213
123577GT	71, 73, 75
123677GT	51
123688GT	221, 407
123838GT	331
123893GT	37, 39
123894GT	49
123897GT	343
123920GT	45
124728GT	387
130070GT	193
130071GT	193
130107GT	329
130123GT	223, 225, 229, 231, 233, 235
130124GT	223, 225, 229, 231, 233, 235
130126GT	229
130132GT	231
130134GT	231, 235
130147GT	233
130157GT	433, 437, 441, 469
130160GT	223, 225
130161GT	229
130163-1253GT	235
130163-5763GT	227
130163-7313GT	237
130163-7983GT	231
130163-9500GT	229
130163-9556GT	227
130163-10844GT	225
130163-11892GT	223
130163-12150GT	235
130163-12591GT	233
130164GT	219
130189GT	223, 225, 229, 231, 233, 235
130198GT	223, 225
130203GT	223, 225
130208GT	223, 225
130215GT	235
130220GT	235
130223GT	237
130241GT	219
130243GT	219
130254GT	233
130258GT	233
130259GT	221
130301GT	221
130319GT	329
130327GT	221
130352GT	329
130353GT	329
130386GT	345, 351
130535GT	349
130872GT	345
130930GT	347
130931GT	355
130938GT	357
133206GT	25, 35
138041GT	117
138077GT	179
141002GT	323, 325
141003GT	323, 325
141004GT	323, 325, 329
141029GT	347

Part no.	Page Number
141045GT	347, 357
141090GT	353, 357
141103GT	89
141104GT	107
141334GT	351
141708GT	345, 347, 351, 355
141713GT	347, 351, 355
141717GT	347
141745GT	51, 345, 349, 353
141949GT	343
160340GT	47
160341GT	47
160342GT	47
160343GT	47
160344GT	47
160482GT	21, 23
161444GT	215, 411, 461, 467
161534GT	379
162208GT	253, 273, 295, 313
162209GT	253, 273, 295, 313
162342GT	329
214354GT	289, 307
214418GT	17, 19, 25
214419GT	25
214437GT	237
214581GT	203
214715GT	221
214795GT	243
215071GT	391
215216GT	249, 255, 269, 275, 287, 297...
215217GT	249, 255, 275, 287, 297. 309...
215219GT	255, 275, 297, 315
215254GT	57
215268GT	17, 19
215481GT	389
215638GT	325
215639GT	325
215644GT	27, 29, 31, 33
215645GT	31, 33
215646GT	27, 29, 35
215647GT	35
215648GT	31, 33
215755GT	391
215757GT	391
215771GT	237
215772GT	237
215783GT	45
216067GT	391
216068GT	391
216069GT	391
216070GT	391
216072GT	391
216073GT	391
216074GT	391
216075GT	391
216076GT	391
216077GT	391
216078GT	391
216567GT	327
216568GT	325
216569GT	325
216570GT	325
216571GT	325
216606GT	409
216612GT	409
216615GT	409
216617GT	409
216635GT	325
218049GT	45
218100GT	211
218457GT	303
218458GT	253, 273, 287, 295, 313
218489GT	227
218493GT	173
218707GT	13
218715GT	243, 289, 305
218726GT	13
219321GT	289, 307
219329GT	259, 279
219457GT	59, 65
219626GT	25, 35
220063GT	15
220064GT	15
220078GT	181
220079GT	181
220080GT	177
220081GT	179
220082GT	179
220083GT	167
220084GT	183
220085GT	183
220086GT	191
220087GT	191
220088GT	191
220089GT	187
220090GT	189
220092GT	173
220093GT	173
220094GT	175, 183
220095GT	175
220096GT	175, 185
220097GT	175, 187
220098GT	175, 187
220099GT	175, 187
220100GT	175
220101GT	185
220102GT	169
220103GT	169
220104GT	169
220105GT	169
220106GT	169, 197
220107GT	169
220108GT	169
220109GT	169
220110GT	169
220112GT	169
220113GT	169, 197
220114GT	171
220115GT	171
220116GT	171
220117GT	171
220118GT	193
220119GT	193
220120GT	193
220121GT	193
220122GT	193

Part no.	Page Number
220123GT	193
220124GT	193
220125GT	193
220126GT	193
220127GT	193
220130GT	197
220131GT	197
220132GT	197
220133GT	197
220134GT	197
220135GT	197
220136GT	197
220137GT	197
220138GT	197
220139GT	197
220140GT	197
220141GT	197
220142GT	197
220143GT	197
220144GT	197
220145GT	197
220146GT	197
220147GT	197
220148GT	197
220149GT	197
220154GT	197
220155GT	199
220161GT	181
220166GT	179
220167GT	179
220168GT	179
220184GT	191
220185GT	187
220186GT	187
220188GT	185
220189GT	193
227493GT	193
227989GT	195
228578GT	245, 287, 307
228991GT	91
229110GT	435, 439, 443
229302GT	221
229303GT	221
229304GT	213
229677GT	389
229682GT	411, 455
229819GT	213
229853GT	49, 55
229976GT	383
229977GT	383
229978GT	207
229987GT	201
229994GT	51
230004GT	399
230007GT	225
230008GT	219
230009GT	223, 225
230029GT	219
230030GT	219
230043GT	219
230044GT	223
230045GT	227
231037GT	379
231118GT	219
231119GT	233
231123GT	233
231155GT	21, 23, 31, 33
231330GT	219
231511GT	251, 265, 293, 309
231513GT	55
231530GT	269
231532GT	55, 279
231533GT	253, 273, 295, 313
231917GT	213
231931GT	201
232874GT	245, 265, 287, 289, 307
233058GT	81, 83
233569GT	51
233651GT	61, 67
233940GT	411, 453
234859GT	219
234961GT	245, 287, 307
234962GT	245, 287, 307
236243GT	259, 279, 301, 319
236244GT	301, 321
236245GT	301, 319
236246GT	259, 301, 319
236247GT	321
236248GT	259, 301, 319
236249GT	289, 307
236251GT	259, 301, 319
236252GT	303, 321
236256GT	259, 301, 319
236258GT	259, 301, 319
236259GT	253, 273, 295, 313
236260GT	15, 253, 273, 295, 313
236266GT	253, 295, 313
236267GT	15, 281
236268GT	15
236269GT	301, 319
236274GT	249, 287, 309
236275GT	289, 307
236280GT	213
236334GT	243, 269, 289, 305
236345GT	217
236346GT	217
236348GT	387
236350GT	223
236351GT	225
236436GT	213
236667GT	219
236782GT	219
236783GT	235
237067GT	233
237161GT	245
237162GT	245
237163GT	245
237236GT	379
237355GT	213, 221
237599GT	25
237601GT	17, 19
237605GT	17, 19
237662GT	211
237667GT	223
237721GT	35
237722GT	27, 29

Part no.	Page Number
237726GT	27, 29
237820GT	57, 269, 285
237933GT	213, 411, 451
237934GT	389
237956GT	265
237957GT	265
237958GT	265
237970GT	17, 19, 21, 23
237971GT	21, 23
238135GT	355
633070GT	95
640696GT	233
822250GT	465
822352GT	55
822436GT	445, 449
822437GT	445, 449
822438GT	449
822439GT	449
822445GT	445, 447, 449
822462GT	447
822463GT	447
822464GT	445
822465GT	447
822466GT	445, 447
822467GT	445
822468GT	445
822469GT	445
822621GT	249, 269, 293, 309
822813GT	435, 439, 443
823057GT	15, 273
823059GT	243, 289, 305
823117GT	47
823118GT	47
823420-690GT	253, 273, 295, 313
823421-1750GT	253
823421GT	253, 273, 295, 313
824027GT	45, 85, 87, 201, 227, 233...
824028GT	329, 365, 387
824029GT	39, 45, 55, 219, 329
824032GT	387, 389
824038GT	203, 211
824059GT	57
824066GT	331
824067GT	63, 69, 77, 79, 81, 83...
824068GT	49, 77, 79, 81, 83, 353...
824069GT	347
824077GT	273
824078GT	49, 59, 65, 217, 239, 243...
824079GT	77, 79, 81, 83, 211, 291...
824080GT	51, 213, 243, 265, 271, 355
824081GT	45, 77, 79
824082GT	61, 67, 81, 83, 357
824085GT	53, 77, 79, 239, 409
824086GT	53, 257, 277, 283, 297, 315
824087GT	81, 83
824088GT	59, 67
824089GT	63, 69, 325, 395
824090GT	39, 55, 207, 211, 239, 243...
824091GT	59, 61, 67, 211, 255, 275...
824092GT	351, 355
824094GT	285
824095GT	219
824096GT	37, 39, 329
824109GT	339
824110GT	49, 77, 79, 81, 83, 357...
824111GT	61, 65
824113GT	85, 87, 203, 211, 213, 219...
824116GT	81, 83
824119GT	229
824120GT	53, 255, 269, 277, 297, 315
824124GT	43, 227, 255, 273, 283, 295...
824125GT	43, 51, 55, 201, 213, 217...
824131GT	237, 283
824132GT	253, 267, 269, 277, 291, 299...
824133GT	249, 257, 269, 277, 291, 299...
824134GT	271
824135GT	233
824136GT	243, 287, 305
824144GT	243, 269, 287, 291, 305
824145GT	245, 265
824152GT	347
824164GT	347
824206GT	213
824215GT	389
824227GT	203, 285, 387
824251GT	95
824478GT	101
824673GT	253, 273, 279, 295, 301, 313
824763GT	259, 301, 319
824775GT	279, 289, 307
824776GT	263, 289, 307
824777GT	289
824778GT	245
824856GT	51
824927GT	343
824991GT	257, 277, 299, 317
825005GT	85, 87
825019GT	49, 77, 79, 81, 83, 351...
825249GT	289, 307
825352GT	249, 269
825353GT	307, 343
825355GT	201, 221
825358GT	45, 211
825560GT	257, 277, 299, 317
825767GT	37
825796GT	329
825921GT	101
825949GT	283
826136GT	359
826171GT	203, 347, 355
826228GT	347, 351, 355
826345GT	21, 23
826377GT	255, 275, 297, 315
826378GT	255, 275, 297, 315
826516GT	355
1251757GT	59, 65
1251983GT	255, 275, 297, 315
1252025GT	449
1252169GT	153
1252170GT	153
1252182GT	143
1252184GT	13
1252230GT	123
1252239GT	135, 139
1252240GT	135, 139
1252241GT	135, 139

Part no.	Page Number
1252242GT	135, 139
1252266GT	135, 139
1252272GT	125, 127, 129, 131, 135, 139
1252273GT	125, 127, 129, 131, 135, 139
1252329GT	125, 127, 129, 131, 135, 139
1252330GT	125, 127, 129, 131, 135, 139
1252331GT	125, 127, 129, 131, 135, 139
1252332GT	125, 127, 129, 131, 135, 139
1252333GT	125, 127, 129, 131, 135, 139
1252334GT	125, 127, 129, 131, 135, 139
1252335GT	125, 127, 129, 131, 135, 139
1252337GT	135, 139
1252338GT	135, 139
1252339GT	135, 139
1252340GT	137, 141
1252341GT	137, 141
1252342GT	137, 141
1252343GT	137, 141
1252354GT	125, 127, 129, 131, 135, 139
1252366GT	123
1252373GT	145
1252411GT	133
1252463GT	127, 131, 135, 139
1252532GT	113
1252533GT	93
1252534GT	93
1252538GT	91
1252541GT	89
1252542GT	97
1252549GT	101
1252551GT	93
1252555GT	93
1252556GT	93
1252557GT	93
1252559GT	101
1252561GT	101
1252570GT	91
1252576GT	101
1252579GT	107
1252583GT	117
1252586GT	101
1252594GT	93
1252605GT	91
1252613GT	101
1252614GT	101
1252617GT	101
1252618GT	91
1252619GT	97
1252621GT	91
1252625GT	101, 117
1252626GT	101
1252628GT	101, 117
1252656GT	91
1252657GT	105
1252660GT	97
1252662GT	97
1252669GT	89
1252670GT	95, 113
1252675GT	93
1252676GT	93
1253091GT	25, 35
1253180GT	45
1253182GT	45
1253185GT	201, 259, 279, 303, 321
1253241GT	387
1253245GT	343
1253247GT	37, 39
1253248GT	49, 77, 79
1253249GT	81, 83
1253319GT	387
1253478GT	343, 351
1253490GT	51
1253641GT	253, 273, 295, 313
1253642GT	253, 273, 295, 313
1253814GT	359
1253815GT	325, 329
1253843GT	345, 351
1253929GT	41, 43, 83
1253935GT	329
1253948GT	211
1253956GT	203
1253960GT	207
1253961GT	201
1253962GT	233, 237
1253967GT	233
1253968GT	237
1253969GT	229
1253970GT	229
1253971GT	235
1253972GT	227
1253974GT	223
1253976GT	231
1253977GT	219
1253978GT	219
1253979GT	219
1253981GT	203
1253982GT	207
1253983GT	207
1254024GT	343
1254025GT	345, 347
1254033GT	211
1254034GT	201
1254038GT	353, 355
1254050GT	323, 343
1254055GT	201
1254056GT	53
1254057GT	387
1254146GT	203, 221
1254148GT	203
1254352GT	255, 275, 297, 315
1254405GT	329
1254429GT	357
1254459GT	395
1254460GT	85, 87
1254525GT	323, 325, 329
1254532GT	325
1254533GT	325
1254545GT	325
1254546GT	325
1254547GT	325
1254548GT	323
1254549GT	323
1254550GT	323
1254551GT	323
1254552GT	323
1254553GT	323

Part no.	Page Number
1254564GT	387
1254565GT	387
1254568GT	387
1254569GT	387
1254805GT	53
1254971GT	325
1255001GT	53
1255393GT	55, 203, 207, 211
1255452GT	51, 325
1255454GT	283
1255469GT	271
1255512GT	55
1255629GT	201, 353
1255630GT	219
1255647GT	387
1255735GT	365, 387
1255753GT	287
1255756GT	85, 87, 233
1255757GT	45, 51, 249, 253, 271, 273
1255758GT	51, 61, 67, 201, 219, 233
1255760GT	43, 53, 61, 65, 205, 211...
1255761GT	41, 43, 83
1255763GT	49
1255764GT	45, 53
1255765GT	53
1255797GT	85, 87
1255798GT	85, 87
1255800GT	357
1255801GT	269, 355
1255804GT	53
1255805GT	51, 55
1255806GT	251, 255, 271, 275, 279
1255852GT	53
1255882GT	387
1255887GT	45, 59, 65
1256072GT	73, 75
1256106GT	323, 325, 329
1256107GT	323, 325, 329
1256112GT	359
1256113GT	359
1256115GT	59, 65, 345, 349, 353
1256116GT	351, 357, 359
1256117GT	347, 351
1256118GT	51, 357
1256119GT	345
1256120GT	343
1256124GT	207
1256125GT	207, 213, 217
1256126GT	387
1256127GT	49, 59, 65, 237, 355
1256172GT	351
1256173GT	37, 39
1256176GT	237
1256179GT	61, 67
1256219GT	15, 257, 277, 299, 317
1256220GT	15, 257, 277, 299, 317
1256282GT	201
1256283GT	249, 269, 293, 309
1256286GT	297, 309
1256308GT	359
1256310GT	329
1256323GT	203
1256450GT	201, 221
1256451GT	223, 225, 233
1256452GT	223
1256453GT	223, 225, 231, 235
1256454GT	225, 229
1256455GT	223, 225, 229, 231, 233, 235
1256456GT	233
1256458GT	237
1256459GT	229
1256462GT	201
1256463GT	215, 233, 401
1256465GT	325
1256466GT	73, 75, 201
1256469GT	201
1256470GT	221
1256474GT	219
1256477GT	221
1256478GT	211
1256649GT	365
1256679GT	77, 79, 201, 207, 211, 285
1256756GT	51, 61, 67
1256804GT	387
1256835GT	55
1256843GT	307
1256851GT	249, 269, 293, 309
1256856GT	353, 363
1256863GT	37, 39, 41
1256864GT	329, 353
1256922GT	387
1257046GT	217
1257047GT	387
1257102GT	343
1257231GT	263
1257296GT	397
1257312GT	281
1257313GT	281
1257314GT	281
1257315GT	281
1257318GT	259, 281, 301, 319
1257327GT	259, 301, 319
1257328GT	259, 301, 319
1257329GT	259, 279, 301, 319
1257334GT	261, 303, 321
1257335GT	281
1257337GT	281
1257338GT	269
1257339GT	257, 277, 301, 319
1257340GT	279
1257342GT	303
1257343GT	261, 281, 303, 321
1257344GT	279
1257347GT	279
1257350GT	279, 301, 319
1257352GT	261, 279, 301
1257358GT	261, 263, 303, 321
1257360GT	301, 319
1257361GT	247, 269, 287, 305
1257362GT	249, 281, 301, 319
1257363GT	247, 269, 293, 309
1257367GT	267
1257369GT	267
1257370GT	267
1257371GT	267, 269
1257372GT	267

Part no.	Page Number
1257374GT	263
1257375GT	263
1257376GT	263
1257378GT	267
1257386GT	259, 279, 319
1257390GT	51, 59, 65, 213
1257421GT	245, 265
1257434GT	253, 273, 295, 313
1257458GT	325
1257459GT	41
1257460GT	37, 39
1257461GT	41
1257462GT	37
1257629GT	281
1257635GT	259, 279, 301, 319
1257637GT	259, 279, 301, 319
1257646GT	271
1257664GT	267
1257697GT	263
1257698GT	263
1257699GT	269
1257704GT	85, 87, 249, 263, 287, 309
1257726GT	345, 347
1257733GT	13
1257745GT	63, 69, 365, 387
1257778GT	263
1257779GT	263
1257782GT	283
1257783GT	283
1257784GT	285
1257785GT	285
1257786GT	285
1257796GT	283
1257797GT	285
1257805GT	343
1257828GT	329
1257899GT	329
1257908GT	43, 83
1257989GT	389
1257991GT	407, 461
1258100GT	465
1258105GT	389
1258122GT	343
1258124GT	37, 39
1258125GT	49
1258174GT	17, 19
1258189GT	405
1258417GT	71, 75
1258428GT	273
1258436GT	257, 277, 299, 317
1258439GT	283
1258440GT	283
1258474GT	283
1258475GT	283
1258480GT	273
1258505GT	297, 309
1258527GT	365, 387
1258563GT	81, 83
1258567GT	13
1258623GT	61, 67
1258711GT	267
1258715GT	387
1258775GT	411, 419
1258919GT	411, 413
1259049GT	263
1259111GT	197
1259113GT	197
1259501GT	109
1259504GT	107
1259508GT	95
1259513GT	107
1259516GT	109
1259518GT	109
1259532GT	117
1259896GT	53
1260002GT	255, 275
1260061GT	57, 237
1260076GT	51, 363
1260225GT	289
1260357GT	261, 263, 303, 321
1260900GT	283
1260963GT	77, 79
1261344GT	255, 275, 297
1261395GT	269, 275
1261460GT	253, 273, 295, 313
1261461GT	257, 277, 299, 317
1261704GT	45
1261711GT	447, 449
1261712GT	447, 449
1261818GT	449
1261880GT	449
1261942GT	265
1262031GT	201
1262230GT	45
1262231GT	45
1262327-8300GT	87
1262327GT	85, 411, 425
1262328-5500GT	87
1262328GT	85, 411, 423
1262330GT	51
1262372GT	387, 389
1262442GT	283
1262451GT	445
1262452GT	445
1262455GT	447
1262457GT	447
1262459GT	445
1262460GT	445
1262723GT	445
1262724GT	445
1262726GT	445
1262732GT	445
1262733GT	445
1262734GT	445
1262735GT	445
1262736GT	445
1262813GT	285
1262854GT	445
1263050GT	195
1263069GT	285
1263070GT	405
1263446GT	285
1263447GT	285
1263497GT	259, 279, 301, 319
1263498GT	259, 279, 303, 319
1263542GT	27, 29

Part no.	Page Number
1263543GT	17, 19
1263702GT	55
1263754GT	51
1263760GT	365, 411, 457
1263973GT	259, 279, 303, 319
1264068GT	45, 47, 49
1264069GT	47
1264072GT	47
1264073GT	47
1264259GT	71, 75
1264286GT	257, 277, 299, 317
1264484GT	259, 279, 303, 321
1264529GT	265, 285
1264545-6000GT	283
1264546-3600GT	283
1264644GT	265
1264646GT	263
1264653GT	71, 75
1264664GT	257, 295, 313
1264765GT	255, 275, 297, 315
1264766GT	269
1264767GT	257, 275, 299, 317
1264768GT	249, 269, 287, 309
1264816GT	263
1264817GT	263
1264917GT	55
1265401GT	279
1266019GT	21, 23, 29
1266547GT	273
1266588GT	367
1266688GT	247
1267794GT	293, 305
1268168GT	393
1268716GT	249, 271
1268754GT	21, 23, 31, 33
1268755GT	17, 19
1268771GT	283
1268965GT	173
1269035GT	249, 271, 291, 309
1269198GT	213
1269272GT	395
1269532GT	25, 35
1270666GT	391
1270945GT	473
1271035GT	391
1271302GT	213
1271303GT	213
1271304GT	213
1272242GT	17, 19, 27, 29
1273074GT	277, 297, 315
1273404GT	81, 83
1273765GT	323
1273766GT	323
1273767GT	323
1273946GT	101, 117
1274165GT	203
1274167GT	63, 69, 239, 257, 269, 277...
1274170GT	201
1274172GT	37, 53, 249, 269, 291, 309...
1274320GT	61, 65, 203, 343, 359
1274321GT	85, 87
1274322GT	37, 39, 45, 49, 51, 55...
1275657GT	207
1275660GT	207
1275934GT	343
1276989GT	375
1277341GT	89
1277342GT	89
1277344GT	89
1277345GT	89
1277346GT	89, 97, 101
1277347GT	89
1277348GT	89
1277349GT	91
1277350GT	91
1277351GT	91
1277352GT	91
1277353GT	91
1277354GT	91
1277355GT	91
1277356GT	91
1277357GT	91
1277358GT	91
1277359GT	91
1277360GT	91
1277361GT	91
1277362GT	93
1277371GT	93
1277372GT	93
1277373GT	93
1277375GT	93
1277377GT	95
1277381GT	95
1277382GT	95
1277383GT	95
1277385GT	95
1277387GT	95
1277388GT	95
1277389GT	95
1277390GT	95
1277391GT	95
1277392GT	95
1277393GT	95
1277396GT	97
1277398GT	97
1277400GT	97
1277401GT	97
1277402GT	97
1277403GT	97
1277404GT	97
1277405GT	97
1277406GT	97
1277407GT	97
1277411GT	97
1277413GT	97
1277414GT	97
1277415GT	97
1277416GT	97
1277417GT	97
1277418GT	99
1277419GT	101
1277421GT	101
1277422GT	101
1277425GT	101
1277426GT	101
1277427GT	101

Part no.	Page Number
1277428GT	101
1277431GT	101
1277434GT	107
1277435GT	107
1277436GT	107
1277437GT	107
1277439GT	107
1277440GT	109
1277441GT	109
1277442GT	109
1277443GT	109
1277444GT	109
1277445GT	109
1277446GT	109
1277447GT	109
1277448GT	109
1277449GT	109
1277450GT	109
1277451GT	109
1277452GT	109
1277453GT	109
1277455GT	109
1277456GT	109
1277457GT	109
1277460GT	109
1277461GT	109
1277462GT	109
1277463GT	109
1277464GT	109
1277465GT	109
1277466GT	109
1277468GT	111
1277469GT	111
1277470GT	111
1277471GT	111
1277472GT	113
1277473GT	113
1277474GT	113
1277475GT	113
1277476GT	113
1277478GT	113
1277479GT	113
1277481GT	113
1277482GT	113
1277483GT	113
1277484GT	113
1277485GT	113
1277486GT	113
1277487GT	113
1277488GT	113
1277489GT	113
1277490GT	113
1277491GT	113
1277492GT	113
1277493GT	113
1277494GT	113
1277495GT	113
1277496GT	113
1277497GT	97, 113
1277498GT	113
1277500GT	115
1277501GT	115
1277502GT	115
1277503GT	115
1277505GT	115
1277506GT	115
1277507GT	115
1277508GT	115
1277509GT	115
1277510GT	115
1277511GT	115
1277512GT	115
1277513GT	115
1277514GT	115
1277515GT	115
1277516GT	115
1277517GT	115
1277518GT	115
1277519GT	115
1277520GT	115
1277521GT	115
1277522GT	115
1277523GT	115
1277524GT	117
1277525GT	117
1277526GT	117
1277527GT	117
1277529GT	117
1277530GT	117
1277531GT	117
1277532GT	117
1277533GT	117
1277534GT	117
1277535GT	117
1277536GT	117
1277537GT	119
1277538GT	119
1277539GT	119
1277541GT	121
1277542GT	121
1277543GT	121
1277544GT	121
1277545GT	121
1277558GT	285
1277582GT	103
1277583GT	103
1277584GT	103
1277585GT	103
1277588GT	105
1277589GT	105
1277590GT	105
1277591GT	105
1277592GT	105
1277593GT	105
1277856GT	241
1277857GT	241
1277904GT	465
1277905GT	465
1277906GT	465
1277907GT	465
1277924GT	49, 51, 55, 59, 65, 207...
1278088GT	201, 207, 213, 217, 219, 227...
1278206GT	259, 303
1278285GT	241
1278701GT	345, 349, 353
1278702GT	389

Part no.	Page Number
1278738GT	261, 263, 303, 321
1278881GT	345, 347, 353
1279208GT	203, 221
1279209GT	203, 221
1279218GT	57
1279229GT	55
1279230GT	257, 277, 299, 317
1279233GT	55
1279263GT	49
1279425GT	259, 301, 319
1279661GT	249, 263, 287, 309
1279662GT	243, 287, 305
1279663GT	243, 289, 305
1279744GT	259, 279, 301, 319
1279746GT	289
1280082GT	259, 295, 313
1280083GT	249, 271, 293, 309
1280264GT	17, 19, 21, 23
1280293GT	17, 19, 21, 23
1280294GT	17, 19
1280295GT	21, 23
1280380GT	329
1280819GT	25
1280820GT	25
1280888GT	21, 23
1281112GT	13
1282269GT	211
1283005GT	221, 249, 269, 355, 387
1283007GT	51
1283014GT	57, 237
1283015GT	253, 273, 295, 313
1283017GT	255, 275, 297
1283019GT	59, 65
1283020GT	253, 273, 295, 313
1283024GT	71, 75
1283028GT	353
1283122GT	207
1283273GT	475, 477
1283319GT	269
1283320GT	269
1283321GT	269
1283327GT	211
1283342GT	283
1283343GT	283
1283344GT	283
1283445GT	259, 279, 301, 319
1283758GT	375
1283776GT	13
1284247GT	477
1284345GT	59, 65
1284346GT	217
1284347GT	217
1284367GT	25, 35
1284521GT	61, 67
1284530GT	61, 67
1285068GT	21, 23
1285069GT	31, 33
1285612GT	59, 65
1285619GT	59, 65, 385
1285620GT	59, 65, 385
1285621GT	59, 65
1286018GT	27, 29, 31, 33
1286019GT	27, 29, 31, 33
1286020GT	27, 29, 31, 33
1286021GT	31, 33
1286022GT	31, 33
1286036GT	259
1286062GT	241
1286083GT	241
1286085GT	241
1286120GT	407
1286185GT	241, 407
1286187GT	381
1286190GT	381
1286194GT	381
1286195GT	379
1286196GT	379
1286198GT	379
1286241GT	241
1286247GT	241
1286789GT	289, 307
1287128GT	213
1287211GT	13
1287854GT	433
1287855GT	427
1287856GT	411, 421
1287857GT	411, 459
1288309GT	13
1288323GT	283
1288654GT	351
1288655GT	359
1288902GT	359
1289026GT	359
1289115GT	71, 75
1289415GT	401
1289416GT	401
1289520GT	403
1289561GT	403
1289578GT	401
1289617GT	401
1289657GT	401
1289659GT	401
1289690GT	255, 275
1289721GT	207
1289722GT	401
1289724GT	241
1289744GT	245, 265
1289747GT	245, 261, 279
1289774GT	119
1289887GT	53
1289914GT	249, 271
1289923GT	53
1290074GT	59, 65
1290091GT	411, 445
1290244GT	257, 277, 297, 315
1290275GT	71, 75
1290277GT	251, 271, 293, 311
1290278GT	249, 271, 291, 309
1290344-8300GT	375
1290411GT	245, 287, 307
1290430GT	359
1290774GT	343
1290775GT	359
1290829GT	55
1290856GT	347
1290865GT	353

Part no.	Page Number
1291056GT	357, 371
1291071GT	285
1291079GT	401
1291197GT	359
1291200-6800GT	375
1291201GT	343
1291242GT	359
1291243GT	343
1291244GT	347, 351, 357
1291245GT	345, 347, 351, 357
1291246GT	355
1291254GT	353
1291257GT	351
1291260GT	351
1291276GT	61, 67
1291298GT	255, 275
1291301GT	355
1291302GT	343
1291303GT	355
1291358GT	51
1291405GT	81, 83
1291406GT	81, 83
1291423GT	359
1291425GT	347
1291436GT	85, 87, 249, 263, 287, 309
1291440GT	353
1291443GT	357
1291444GT	347
1291445GT	351
1291447GT	347
1291451GT	411, 449
1291456GT	283
1291457GT	345
1291458GT	347
1291460GT	345
1291483GT	293
1291486GT	293
1291492GT	71
1291493GT	73
1291509GT	81
1291512GT	41, 43, 83
1291556-7100GT	371
1291562GT	249, 269
1291573GT	401
1291590GT	73, 75
1291591GT	71
1291592GT	73, 75
1291593GT	71
1291614GT	373
1291643GT	353
1291646GT	353
1291647GT	353
1291648GT	353
1291673GT	409
1291678GT	461
1291683GT	461
1291686GT	397
1291704GT	357
1291774GT	287
1292039GT	343
1292054GT	271
1292056GT	267
1292060GT	267, 287
1292061GT	63, 69
1292103GT	211
1292104GT	411, 417
1292105GT	411, 415
1292115GT	267
1292184GT	371
1292185GT	371
1292286GT	77, 79
1292328GT	77, 79
1292331GT	77, 79
1292365GT	59, 65
1292366GT	59, 65
1292544GT	61, 67
1292642GT	61, 67
1292643GT	61, 67
1292644GT	429
1292645GT	61, 67
1292739GT	53
1292741GT	289, 307
1292742GT	251, 265
1292834GT	437
1292927GT	83
1292968GT	51
1293444GT	37
1293452GT	37
1293453GT	37
1293456GT	41
1293457GT	37
1293638GT	37
1293639GT	37
1293817GT	255
1293818GT	401, 461, 465
1293850GT	401
1293864GT	289
1293924GT	253, 273, 295, 313
1293925GT	249, 271, 293, 309
1294030GT	401
1294053GT	285
1294154GT	401
1294157GT	401
1294320GT	429
1294323GT	429
1294326GT	429
1294330GT	429
1294333GT	429
1294403GT	81, 83
1294466GT	211
1294470GT	47
1294526GT	47
1294527GT	49
1294700GT	359
1294729GT	219
1294730GT	201
1294733GT	461, 475
1294735GT	461, 477
1294808GT	429
1294812GT	59, 65
1294863-1850GT	263, 283
1294863-4300GT	283
1294864-1525GT	265
1294864-2900GT	285
1294864-3600GT	283
1294954GT	343

Part no.	Page Number
1294958GT	217
1294959GT	217
1295032GT	211
1295228GT	61, 67, 355
1295229GT	355
1295360GT	371
1295361GT	363
1295364GT	363
1295365GT	363
1295372GT	363
1295373GT	363
1295374GT	363
1295382GT	59
1295383GT	375
1295422-17900GT	375
1295461GT	369
1295463GT	367
1295539GT	17, 19, 27, 29
1295627GT	365
1295726GT	253, 273, 295, 313
1295832GT	55
1295833GT	55
1295834GT	57
1295835GT	55
1296102GT	207
1296180GT	203
1296278GT	61, 67
1296425GT	77, 79
1296431GT	51
1296456GT	211
1296538GT	203
1296539GT	203
1296540GT	203
1296541GT	203
1296542GT	203
1296554GT	243, 277, 291, 305
1296567GT	203
1296568GT	203
1296632-2100GT	371
1296632-17900GT	375
1296649GT	271
1296650GT	265, 287
1296651GT	243, 291, 305
1296766GT	409
1296895GT	405
1296897GT	405
1296928GT	357
1296930GT	81, 83
1297224GT	353
1297269GT	355
1297335GT	61, 67
1297337-4400GT	371
1297337-5200GT	371
1297337-6900GT	371
1297806GT	61, 67
1297980GT	461
1297981GT	461
1297982GT	399
1297983GT	397
1297984GT	399
1298377GT	77, 79
1298378GT	77, 79
1298547GT	207, 399
1298617GT	245, 265
1298652GT	433, 437, 441
1298654GT	433, 437, 441
1298868GT	239
1298933GT	13
1298934GT	475
1298940GT	367
1299129GT	379, 381
1299130GT	381
1299132GT	379, 381
1299133GT	381
1299134GT	379
1299180GT	409
1299252GT	435, 443
1299459GT	461, 471
1299474GT	461, 469
1299631GT	359
1299690GT	77, 79
1299693GT	59, 65
1299770GT	473
1299771GT	463, 471, 473
1299772GT	473
1299773GT	471, 473
1299781GT	473
1299793GT	463
1299794GT	463
1299795GT	463
1299807GT	461, 473
1299858GT	399
1299859GT	399
1299860GT	399
1299876GT	397
1299879GT	397
1299881GT	397
1299917GT	395
1299918GT	395
1299919GT	395
1299947GT	393
1299948GT	393
1299949GT	393
1299953GT	393
1300051GT	203
1300072GT	397
1300073GT	461
1300106GT	53
1300107GT	51
1300667GT	315
1300814GT	351
1300815GT	359
1300816GT	359
1301236-1900GT	371
1301243GT	371
1301308GT	59, 65
1301522GT	461, 463
1301608GT	429
1301867GT	355
1302074GT	233, 355
1302351GT	61, 67
1302462GT	77, 79
1302669GT	59, 65, 385
1302855-6900GT	375
1302942GT	445
1302957GT	429

Part no.	Page Number
1303080GT	239
1303082GT	239
1303112GT	381
1303116GT	361
1303131GT	25, 35
1303132GT	25, 35
1303133GT	25, 35
1303134GT	25, 35
1303135GT	25, 35
1303136GT	25, 35
1303159GT	59, 65
1303160GT	59, 65
1303161GT	59, 65
1303216GT	41, 43, 45
1303217GT	41, 43, 45
1303219GT	41, 43, 47
1303220GT	41, 43, 47
1303236GT	41, 43, 47
1303238GT	41, 43, 49
1303239GT	41, 43, 45, 47, 49
1303240GT	47
1303241GT	41, 43, 47
1303324GT	407
1303387GT	239
1303388GT	239
1303449GT	217
1303483GT	351
1303544GT	307
1303581GT	53
1303655GT	41, 43
1303666GT	41, 43
1303729GT	407
1303808GT	17, 19
1303810GT	25
1303812GT	21, 23, 31, 33
1303922GT	239
1303934GT	329
1304154GT	209
1304217GT	29
1304366GT	385
1304380GT	385
1304384GT	385
1304422GT	393
1304423GT	393
1304463GT	393
1304709GT	239
1304711GT	23, 33
1304806GT	239
1304900GT	85, 87
1304969GT	309
1304971GT	311
1305239GT	411, 431
1305240GT	411, 441
1305319GT	25, 35
1306374GT	75
1306375GT	75
1306408GT	39
1306409GT	39
1306467GT	39
1306510GT	39
1306515GT	25, 35
1307066GT	43, 75
1307067GT	75
1307585GT	73
1307586GT	73
1307588GT	73
1307589GT	73
1307590GT	73
1307591GT	73
1307593GT	73
1307594GT	73
1307595GT	73
1307599GT	73
1307600GT	73
1307601GT	73
1307602GT	73
1307603GT	73
1307604GT	73
1307605GT	73
1307613GT	71
1307614GT	71
1307615GT	71
1307616GT	71
1307618GT	71
1307619GT	71
1307620GT	71
1307622GT	71
1307625GT	71
1307626GT	71
1307627GT	71
1307720GT	73
1307721GT	73
1307722GT	71
1307723GT	73
1307791GT	207
1307893GT	51
1307897GT	277
1308541GT	151
1308544GT	151
1308549GT	123
1308550GT	123
1308605GT	125, 127, 129, 131, 135, 139
1308608GT	123, 127, 131, 135, 139
1308609GT	135, 139
1308610GT	135, 139
1308612GT	125, 127, 129, 131, 135, 139
1308613GT	123, 127, 129, 131, 135, 139
1308614GT	123, 127, 129, 131, 135. 139
1308625GT	17, 19
1308626GT	17, 19
1308627GT	27, 29
1308628GT	27, 29
1308757GT	135, 139
1308771GT	131, 135, 139
1308775GT	125, 127, 131
1308776GT	125, 127, 131
1308777GT	125, 127, 131
1308781GT	125
1308782GT	125, 127
1308787GT	129
1308788GT	129
1308789GT	129
1308790GT	129
1308792GT	129
1308793GT	129, 153
1308795GT	147

Part no.	Page Number
1308798GT	133
1308799GT	133
1308802GT	133
1308805GT	149
1308811GT	149
1308812GT	145, 149
1308813GT	145, 149
1308814GT	149
1308815GT	149
1308816GT	145, 149
1308818GT	145, 149
1308820GT	145
1308821GT	145
1308822GT	145
1308823GT	145
1308828GT	145
1308829GT	145
1308830GT	145
1308832GT	145
1308833GT	145
1308834GT	145
1308835GT	145
1308836GT	145
1308837GT	145
1308840GT	145
1308841GT	145
1308842GT	145
1308843GT	145
1308844GT	145
1308845GT	145
1308849GT	143
1308867GT	153
1309296GT	157, 165
1309297GT	165
1309298GT	165
1309299GT	165
1309300GT	157
1309301GT	157
1309302GT	157
1309303GT	157
1309304GT	157
1309305GT	155
1309306GT	155
1309307GT	155
1309308GT	155
1309309GT	165
1309310GT	165
1309311GT	165
1309312GT	165
1309313GT	165
1309314GT	165
1309315GT	161
1309316GT	161
1309317GT	161
1309318GT	161
1309319GT	161
1309320GT	163
1309321GT	163
1309322GT	163
1309323GT	163
1309324GT	163
1309325GT	163
1309326GT	163
1309327GT	163
1309328GT	163
1309329GT	163
1309330GT	163
1309331GT	163
1309332GT	161
1309333GT	155, 161
1309334GT	155, 161
1309335GT	161
1309336GT	161
1309337GT	161
1309338GT	155, 161
1309339GT	161
1309340GT	161
1309341GT	161
1309342GT	161
1309343GT	161
1309344GT	161
1309345GT	159
1309346GT	159
1309347GT	159
1309348GT	159
1309349GT	159
1309350GT	159
1309352GT	159
1309353GT	155, 159
1309354GT	159
1309355GT	159
1309356GT	159
1309357GT	159
1309358GT	155
1309359GT	155
1309360GT	155
1309361GT	155
1309362GT	155
1309363GT	155
1309364GT	155
1309369GT	165
1309370GT	165
1309371GT	165
1309372GT	165
1309373GT	165
1310127GT	359
1310136GT	21, 31
1310719GT	75
1310730GT	75
1312001GT	55
1312355GT	17, 19, 27, 29
1312701GT	343
1313383GT	399
1313528GT	73, 75
1313530GT	71, 75
1313531GT	71, 75
1313549GT	245, 267
1313550GT	245, 265
1313551GT	245, 267
1313552GT	245, 267
1313553GT	245, 265
1313554GT	245, 261, 279
1313555GT	245, 261, 279
1313556GT	245, 261, 279
1313581GT	245, 265
1313582GT	245, 265

Part no.	Page Number
1313583GT	245, 265
1313584GT	245, 265
1313665GT	203
1313956GT	67
1314001GT	227
1314387GT	73, 75
1317570GT	209
1320740GT	53
1323881GT	339
1323882GT	339
1323883GT	339
1323884GT	339
1323885GT	339
1323886GT	339
1323887GT	339
1324815GT	333, 335
1324816GT	333, 335
1324817GT	333, 335
1324818GT	333, 335
1324819GT	333, 335
1324820GT	333, 335
1324821GT	333, 335
1324822GT	333
1324824GT	333
1324825GT	333
1324826GT	333, 335
1324827GT	333, 335
1324828GT	333, 337
1324829GT	333, 335
1324830GT	333
1324831GT	333
1324832GT	333
1324834GT	333
1324835GT	333, 335
1324836GT	333, 335
1324838GT	333
1324840GT	333
1325211GT	335
1325212GT	335
1325213GT	335
1325214GT	335
1325215GT	335
1325216GT	335
1325217GT	337
1325218GT	335
1325219GT	335
1325220GT	335
1325221GT	335
1325222GT	337
1325223GT	335
1325226GT	337
1325227GT	335
1325262GT	333
1325264GT	333
1325266GT	335
1325267GT	335
1325268GT	337
1325281GT	335
1325286GT	341
1325287GT	341
1325332GT	333
1325347GT	335
1325348GT	337
1325403GT	337
1326315GT	265
1327223GT	49, 55
1327224GT	49, 55
1327225GT	49, 55
1331427GT	385
1331428GT	385
9990491GT	101
T107482GT	327
T112536GT	465
T112537GT	465
T114350GT	255, 277, 297, 315

Part no.	Page Number

California Proposition 65

WARNING

Operating, servicing and maintaining this equipment, passenger vehicle or off-highway motor vehicle can expose you to chemicals including engine exhaust, carbon monoxide, phthalates, and lead, which are known to the State of California to cause cancer and birth defects or other reproductive harm. These chemicals can be emitted from or contained in other various parts and systems, fluids and some component wear by-products. To minimize exposure, avoid breathing exhaust, do not idle the engine except as necessary, service your equipment and vehicle in a well-ventilated area and wear gloves or wash your hands frequently when servicing your equipment or vehicle and after operation. For more information go to www.P65Warnings.ca.gov/passenger-vehicle.

Breathing diesel engine exhaust exposes you to chemicals known to the State of California to cause cancer and birth defects or other reproductive harm.

- Always start and operate the engine in a well-ventilated area.
- If in an enclosed area, vent the exhaust to the outside.
- Do not modify or tamper with the exhaust system.
- Do not idle the engine except as necessary.

For more information go to www.P65warnings.ca.gov/diesel.

Distributed By: